ROHL

Authentic Luxury for Kitchen and Bath®

www.rohlhome.com

Multi-Function Body Spray

ROHL Shower Collection

1095/8

FEATURES

- Multi-function spray pattern
- 2-function spray patterns
  — Classic spray
  — Concentrated spray
- Solid brass
- 1/2" female connection
- Swivel ball-and-socket joint
- 1.0 GPM restricted
- Must loop body sprays when installing
- 90% shut-off position included
- Modern style escutcheon available, order ROGSCO14
- **Upon installation, two or more body sprays need to be installed in a loop to ensure equal pressure**

COLORS/FINISHES

- Polished Chrome
- Polished Nickel
- Satin Nickel
- Tuscan Brass
- Inca Brass
- Old Iron

WARRANTY

- Two Years on Manufacturer Defects*

* No Warranty on Tuscan Brass Finish (TCB)

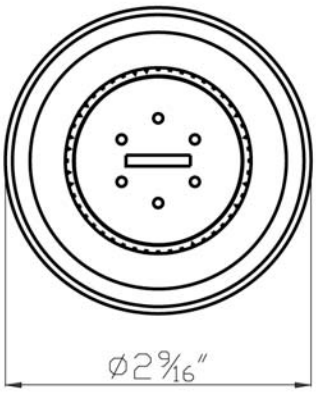

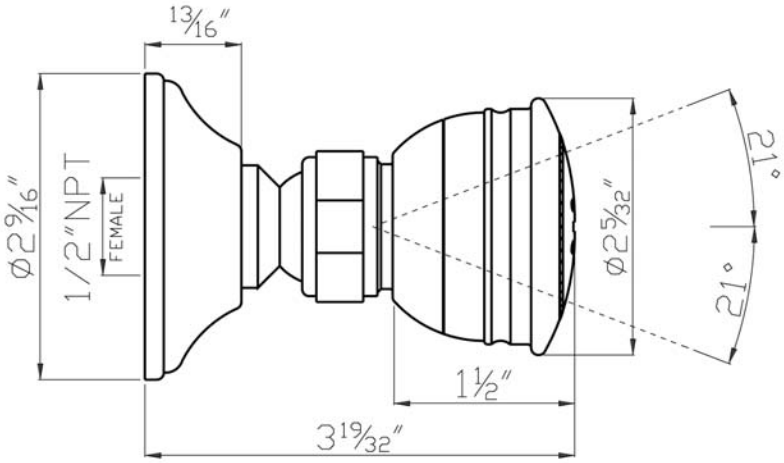

Consult your local ROHL showroom for additional information and specifications. For complete warranty details and a list of showrooms, go to www.rohlhome.com.