Panel bed-K
Assembly Instructions

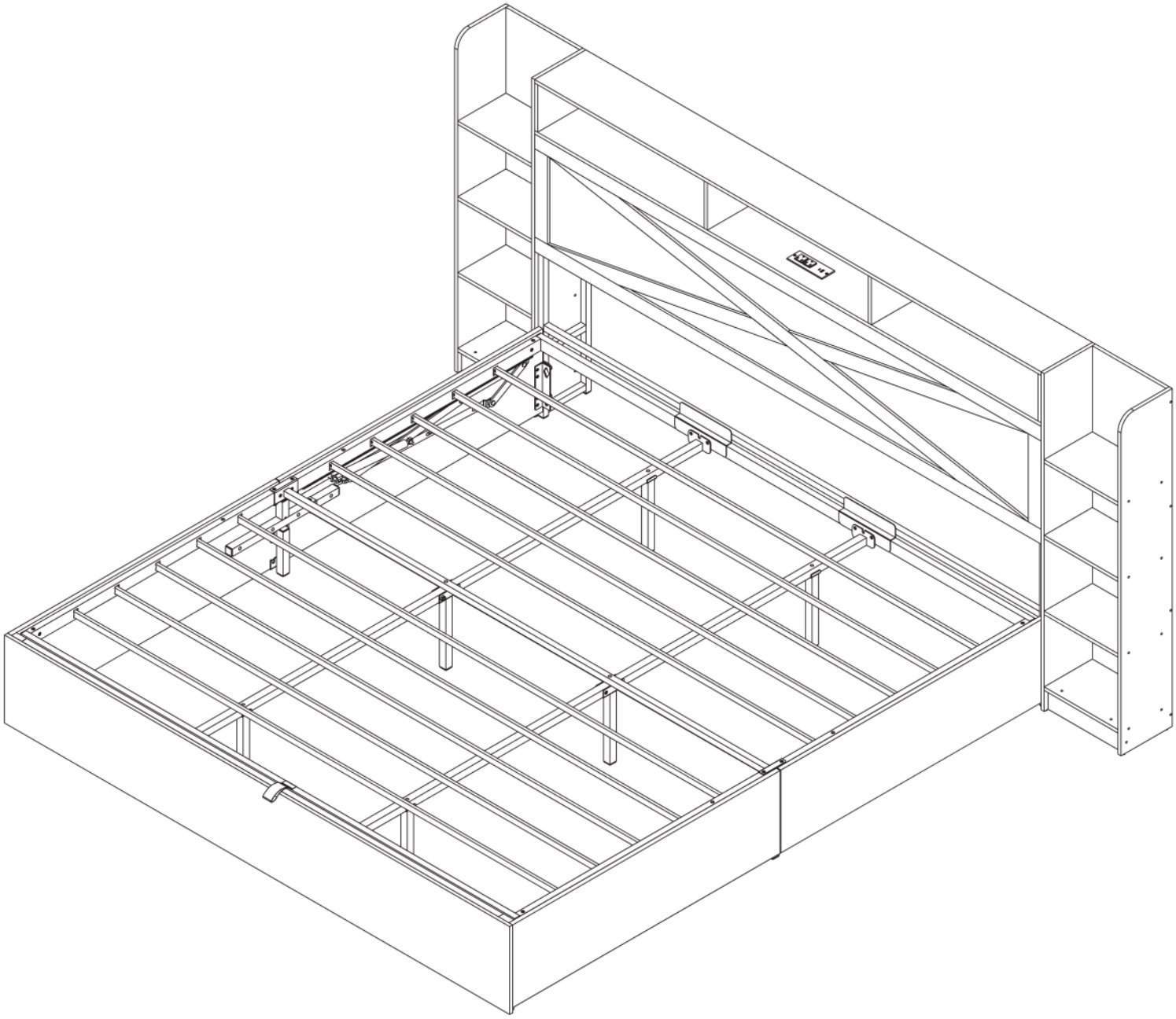

Dear Customers,

Thank you for purchasing our product. Please read this instruction manual carefully after receiving this product. It will help you assemble this product quickly, safely and correctly. You can keep this manual for future reference.

MADE IN CHINA

IMPORTANT

Please follow the instruction manuals and use a pad to protect the product during your assembly.

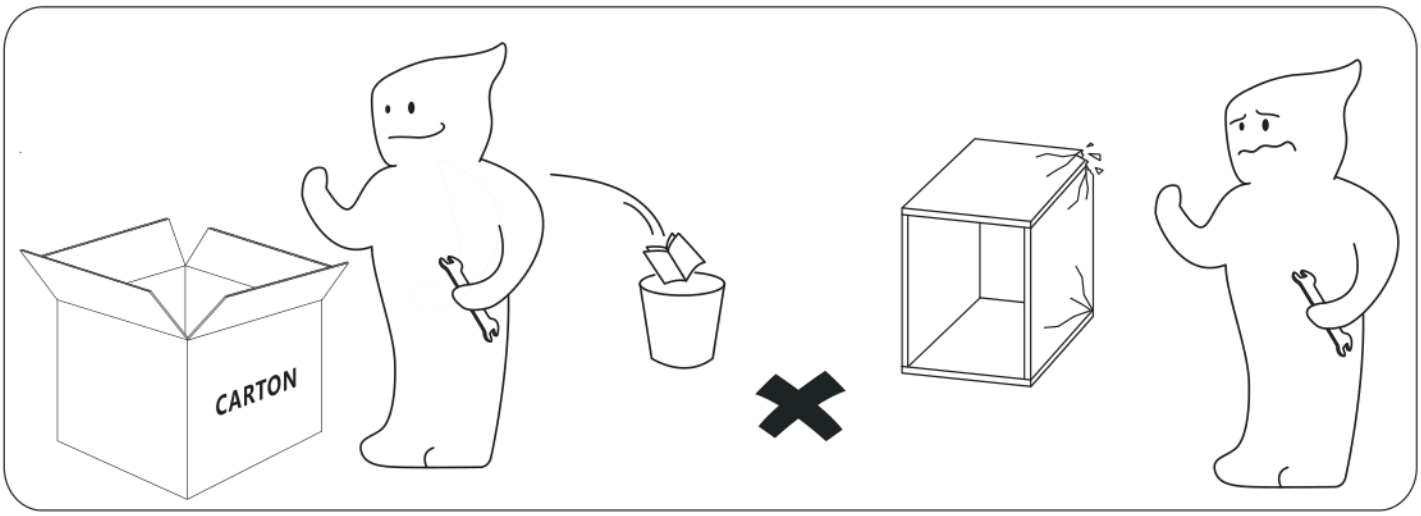

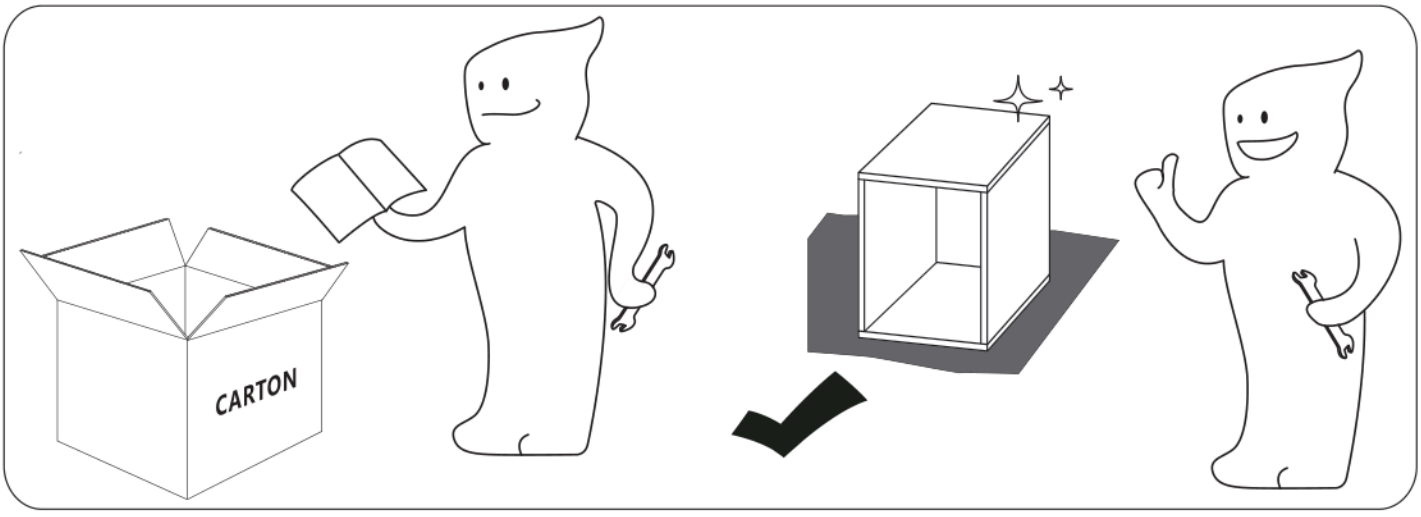

Note:
1. Should be assembled on flat ground to keep balance.
2. Before completing the installation, do not tighten the screws.

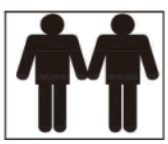

For easier and better assembly, **2** or more adults are required.

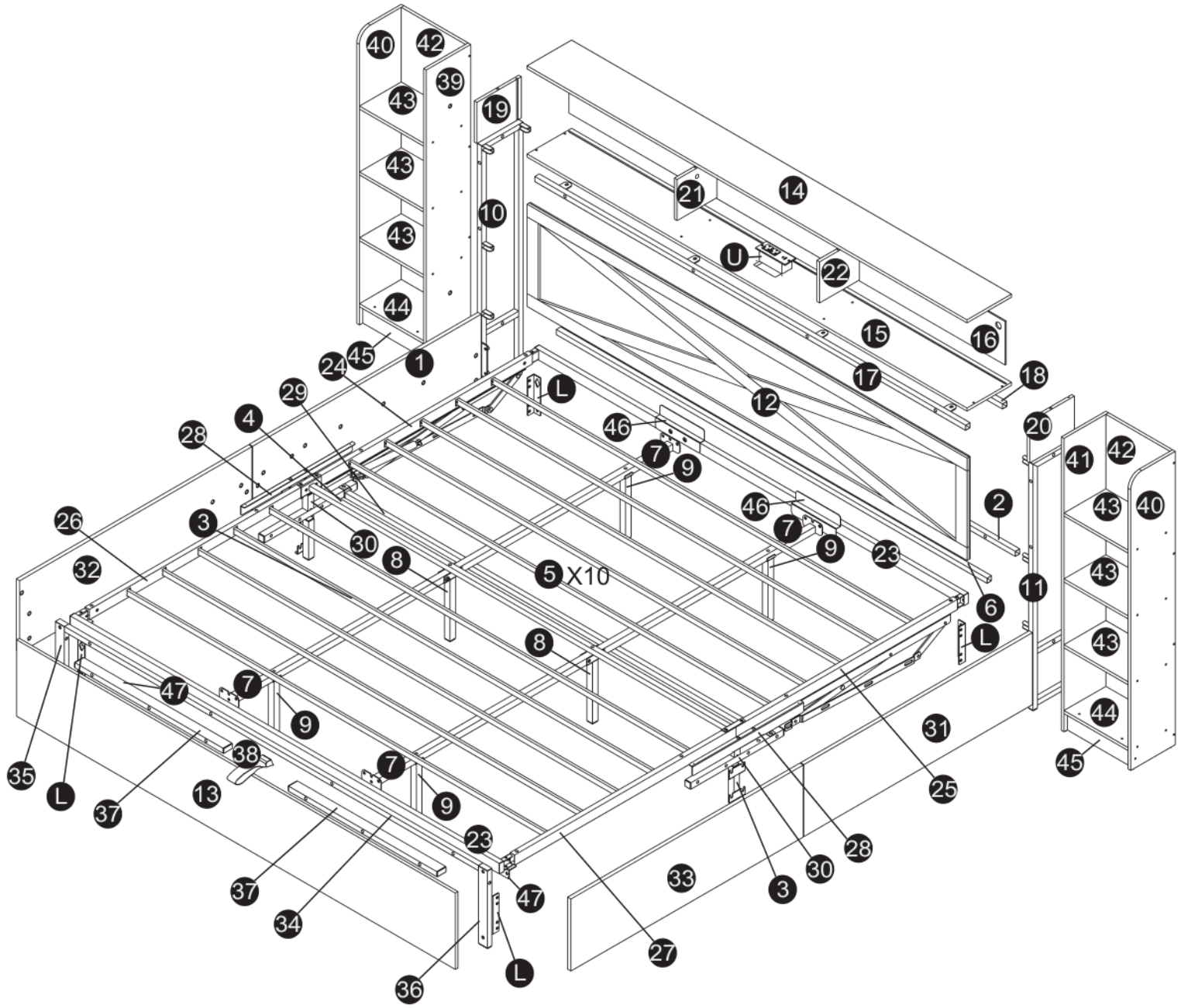
40
42
39
43
19
43
10
21
14
43
U
22
44
15
16
45
1
24
17
18
29
L
12
4
46
20
28
7
9
41
42
2
43
40
26
3
46
7
30
9
23
32
8
5 X10
43
11
6
L
8
43
47
7
9
44
31
38
7
45
35
L
37
13
9
25
23
28
37
47
33
30
3
34
27
36
L

The box 1

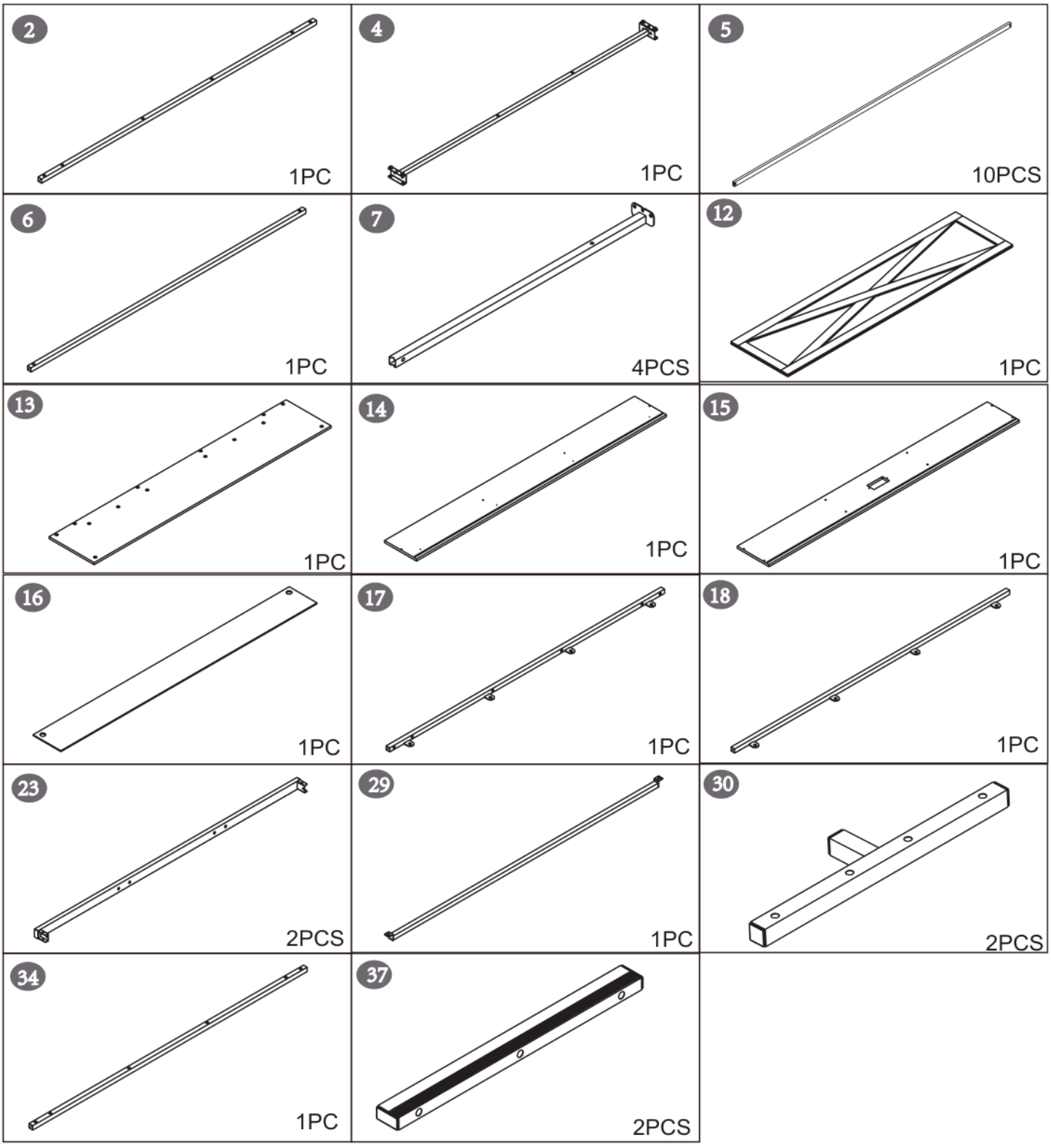
2
1PC
4
1PC
5
10PCS
6
1PC
7
4PCS
12
1PC
13
1PC
14
1PC
15
1PC
16
1PC
17
1PC
18
1PC
23
2PCS
29
1PC
30
2PCS
34
1PC
37
2PCS

The box 2

1 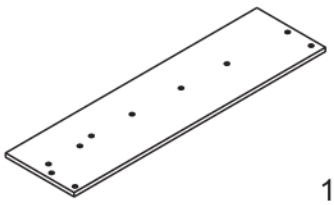 1PC	3 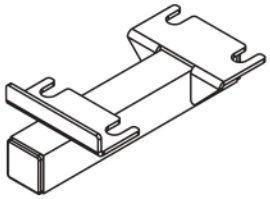 2PCS	8 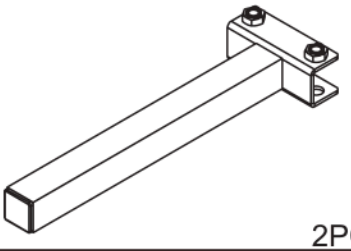 2PCS
9 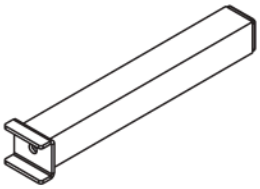 4PCS	10 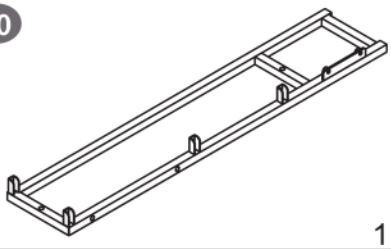 1PC	11 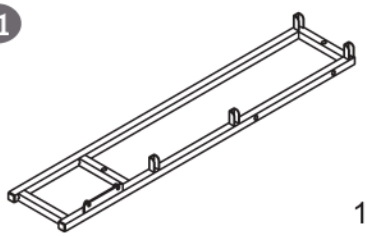 1PC
19 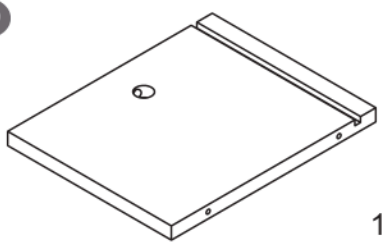 1PC	20 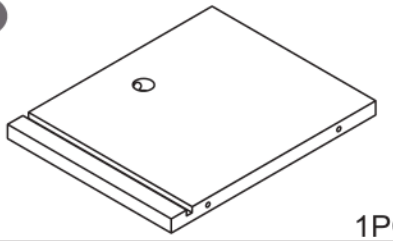 1PC	21 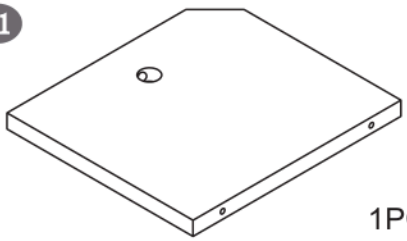 1PC
22 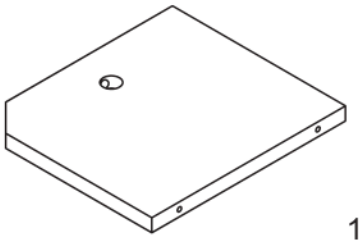 1PC	24 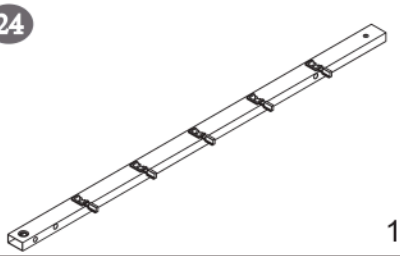 1PC	25 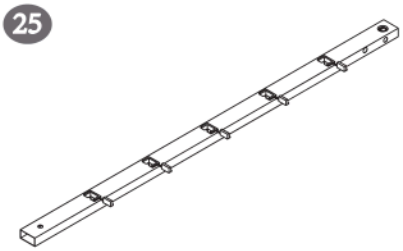 1PC
26 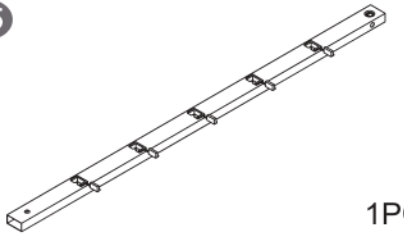 1PC	27 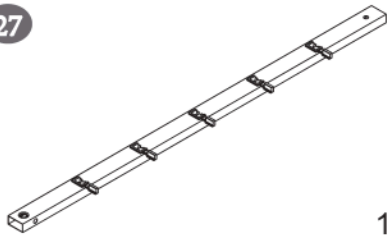 1PC	28 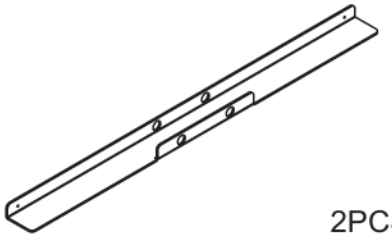 2PCS
31 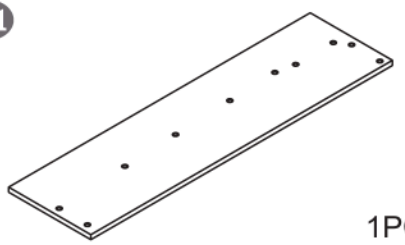 1PC	32 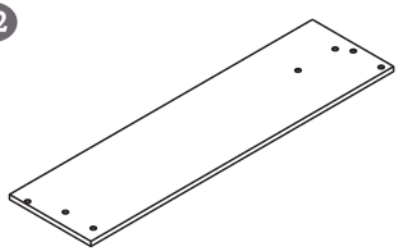	33 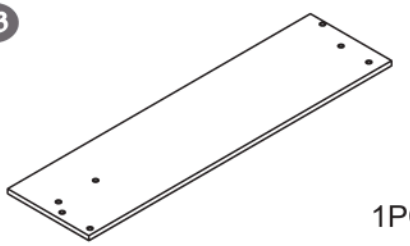 1PC
35 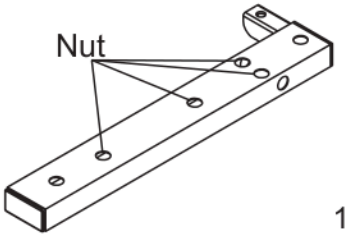 Nut 1PC	36 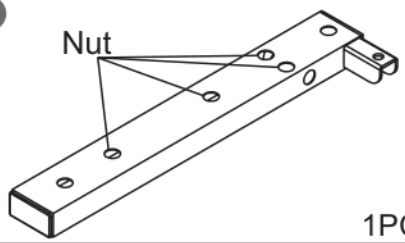 Nut 1PC	38  1PC

The box 2 continued

39 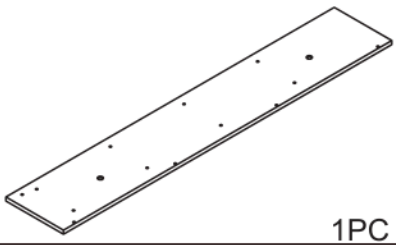 1PC	40 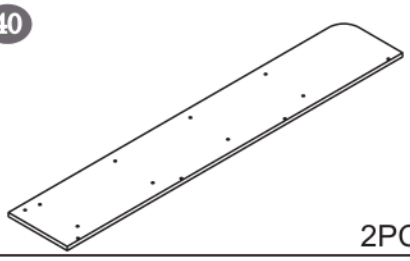 2PCS	41 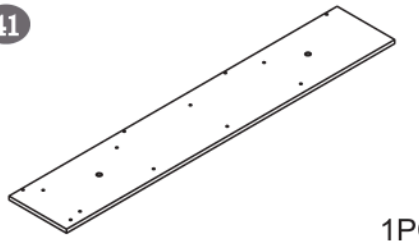 1PC
42 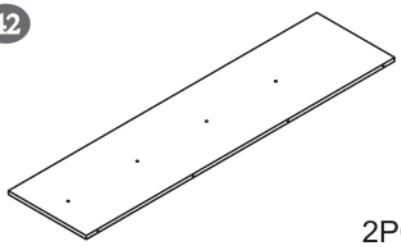 2PCS	43 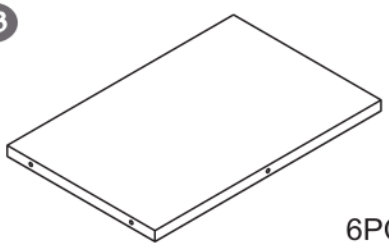 6PCS	44 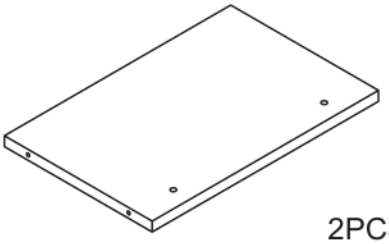 2PCS
45 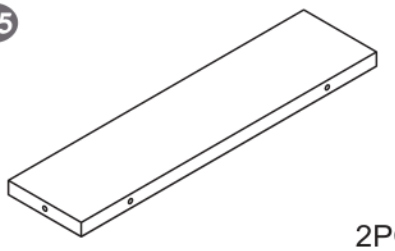 2PCS	46 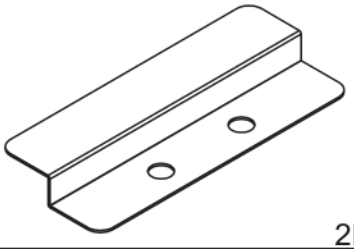 2PCS	47 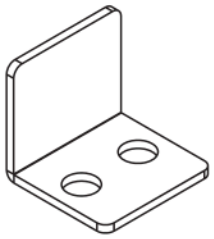 2PCS
48 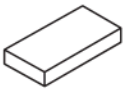 3PCS	L 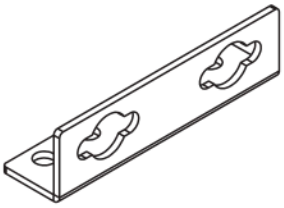 4PCS	Q1 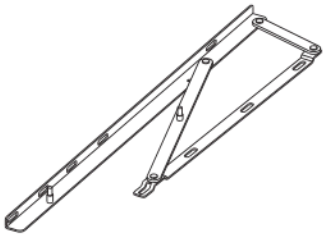 1PC
Q2 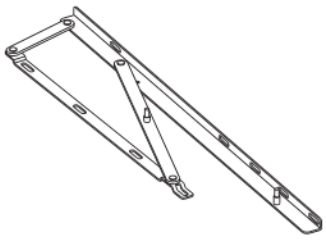 1PC	Q3 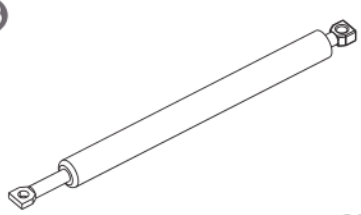 2PCS	U 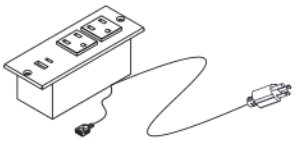 1PC
K  1PC		

The list of vacuum-formed packages in Box 2

A  M8x12 68PCS	B  M8x18 Colored Zinc 16PCS	C  M8x28 24PCS
D  M8x35 16PCS	E  M8x50 Colored Zinc 8PCS	F  M8x55 6PCS
G  M5x40 72PCS	H 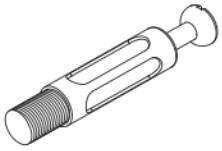 φ7x40 4PCS	I  φ15x9.5 4PCS
J  4PCS	M  ST4.2x12 2PCS	N 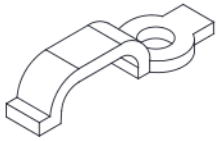 4PCS
O  ST3.2x12 4PCS	P 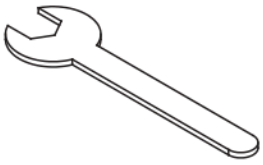 1PC	Q 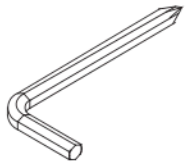 M8 1PC
R 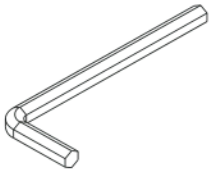 M8 1PC	S 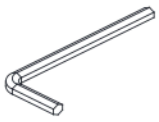 M5 1PC	

Do not tighten the screws unless the installation is done.Make sure all bolts are tightly screwed before you use it.

1

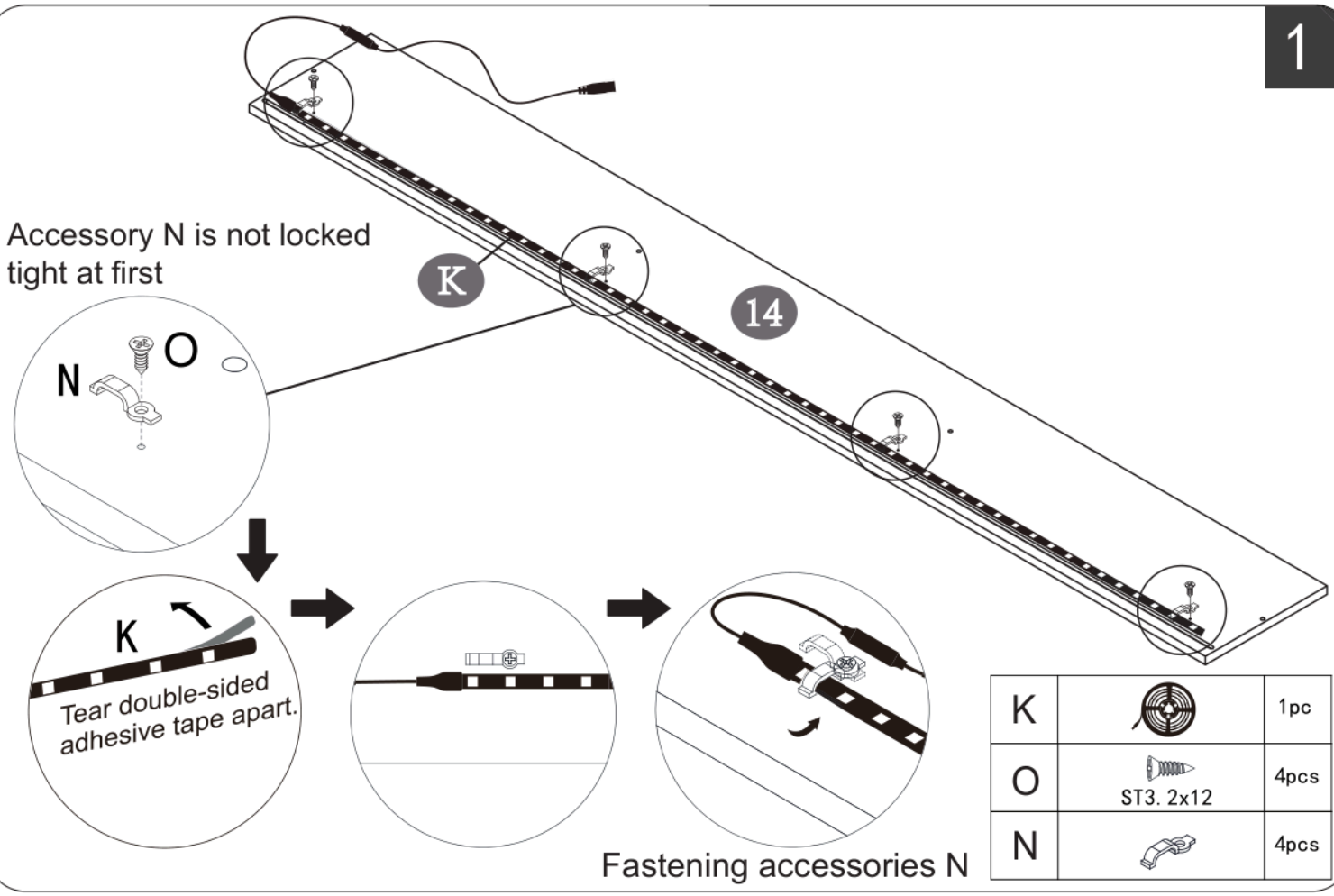

K		1pc
O	ST3. 2x12	4pcs
N		4pcs

2

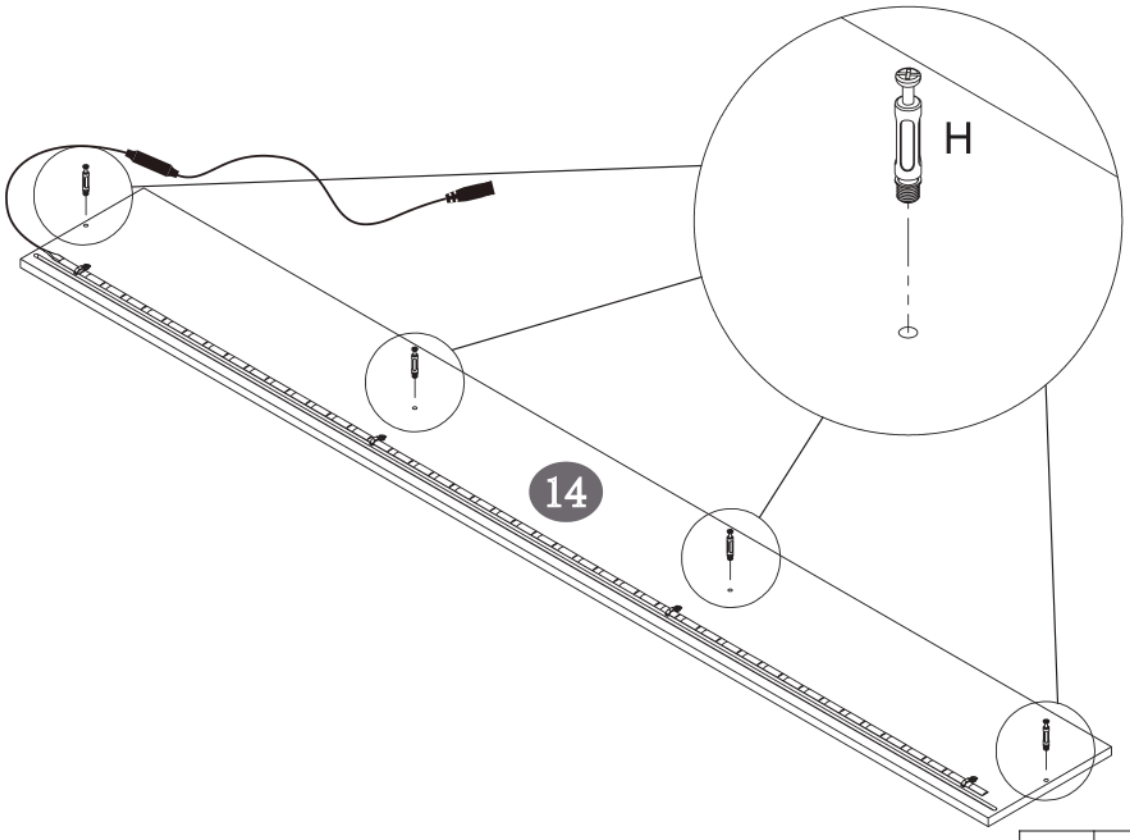

H	φ7x40	4pcs

3

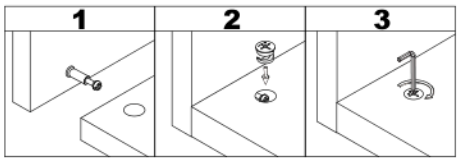

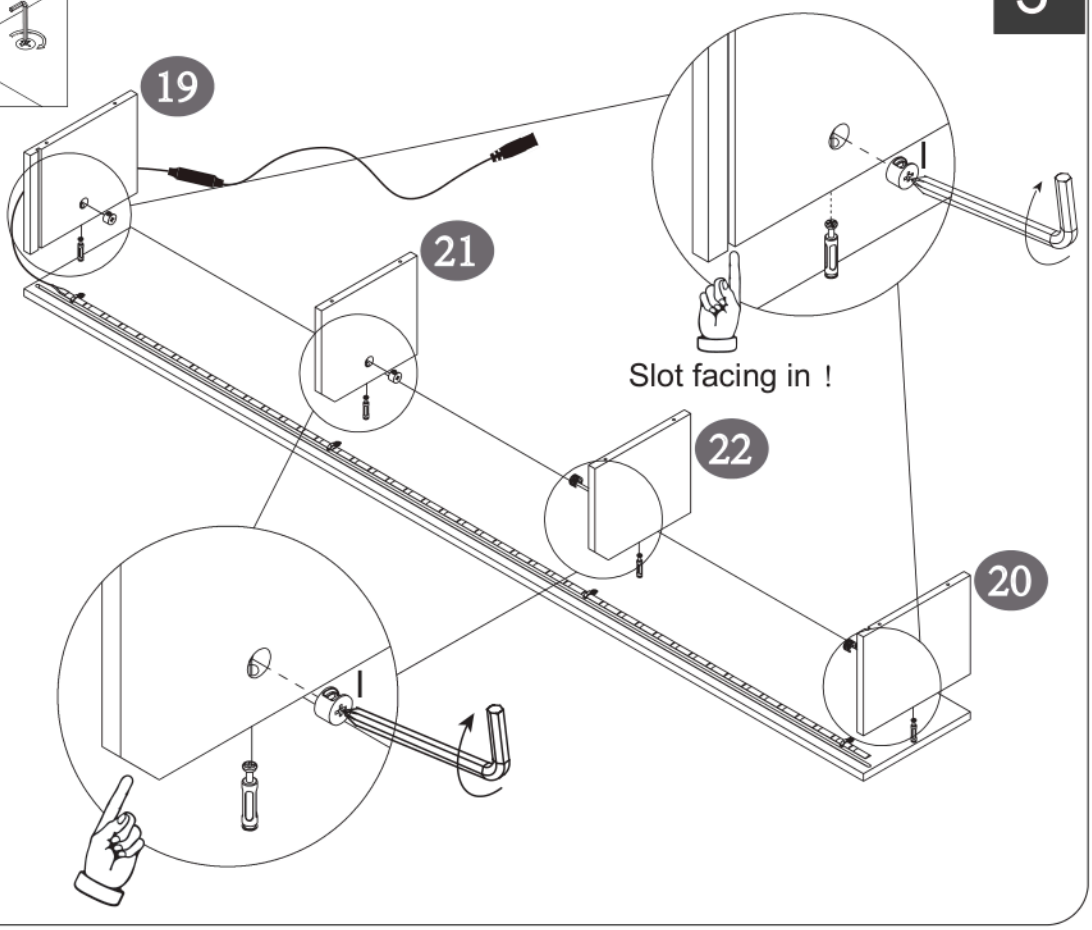

I	φ15x9.5	4 pcs

4

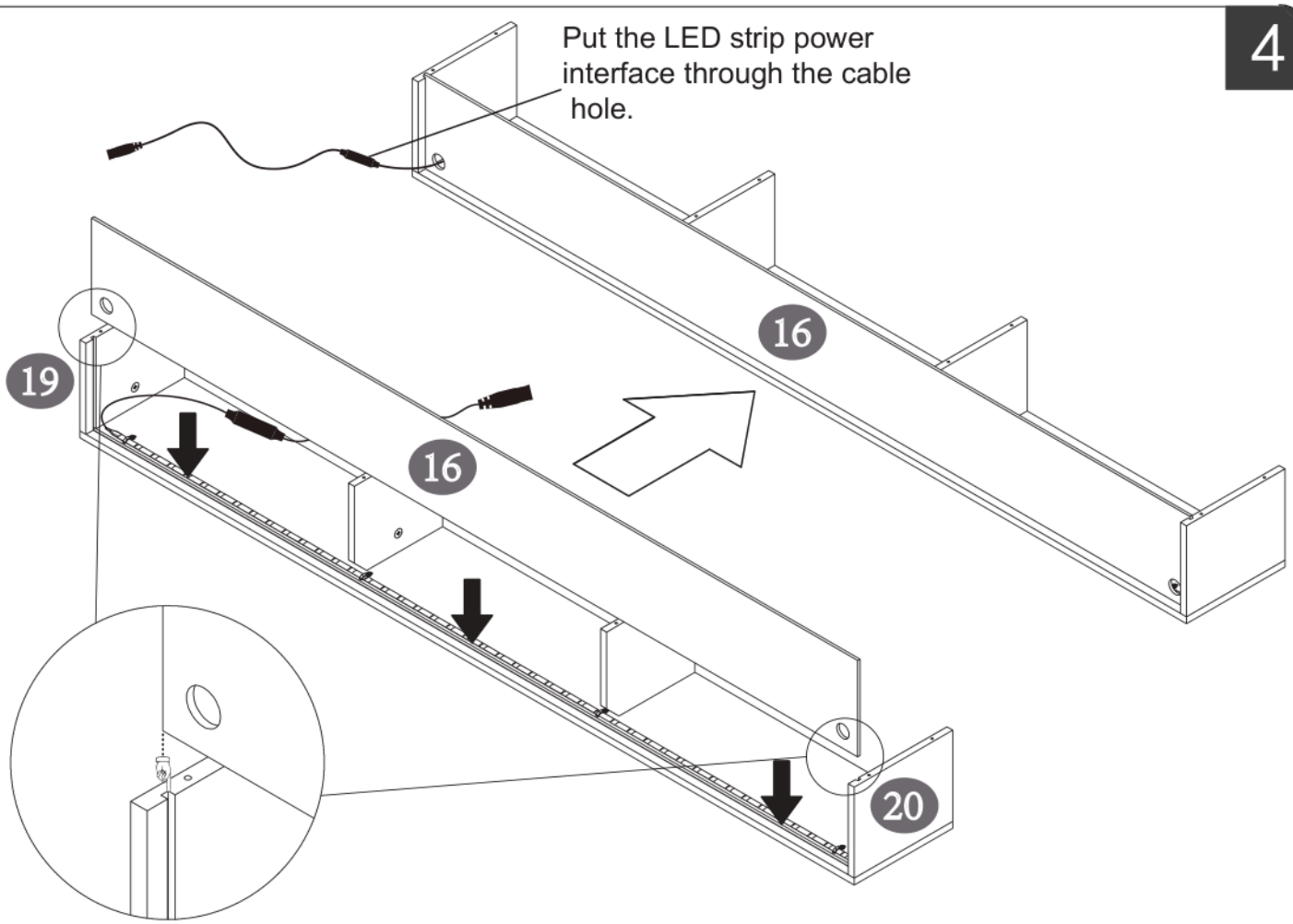

5

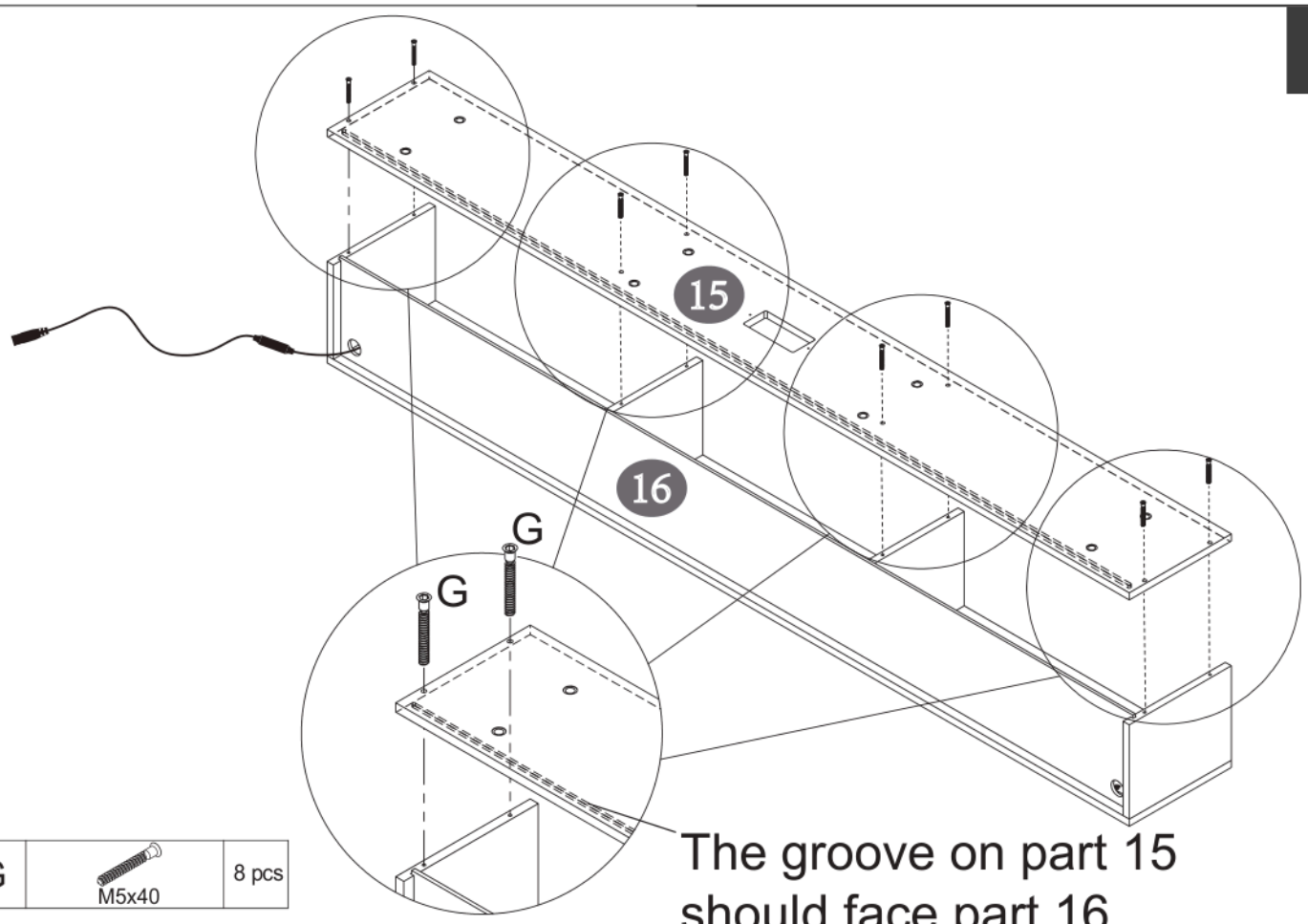

G	M5x40	8 pcs

The groove on part 15 should face part 16.

6

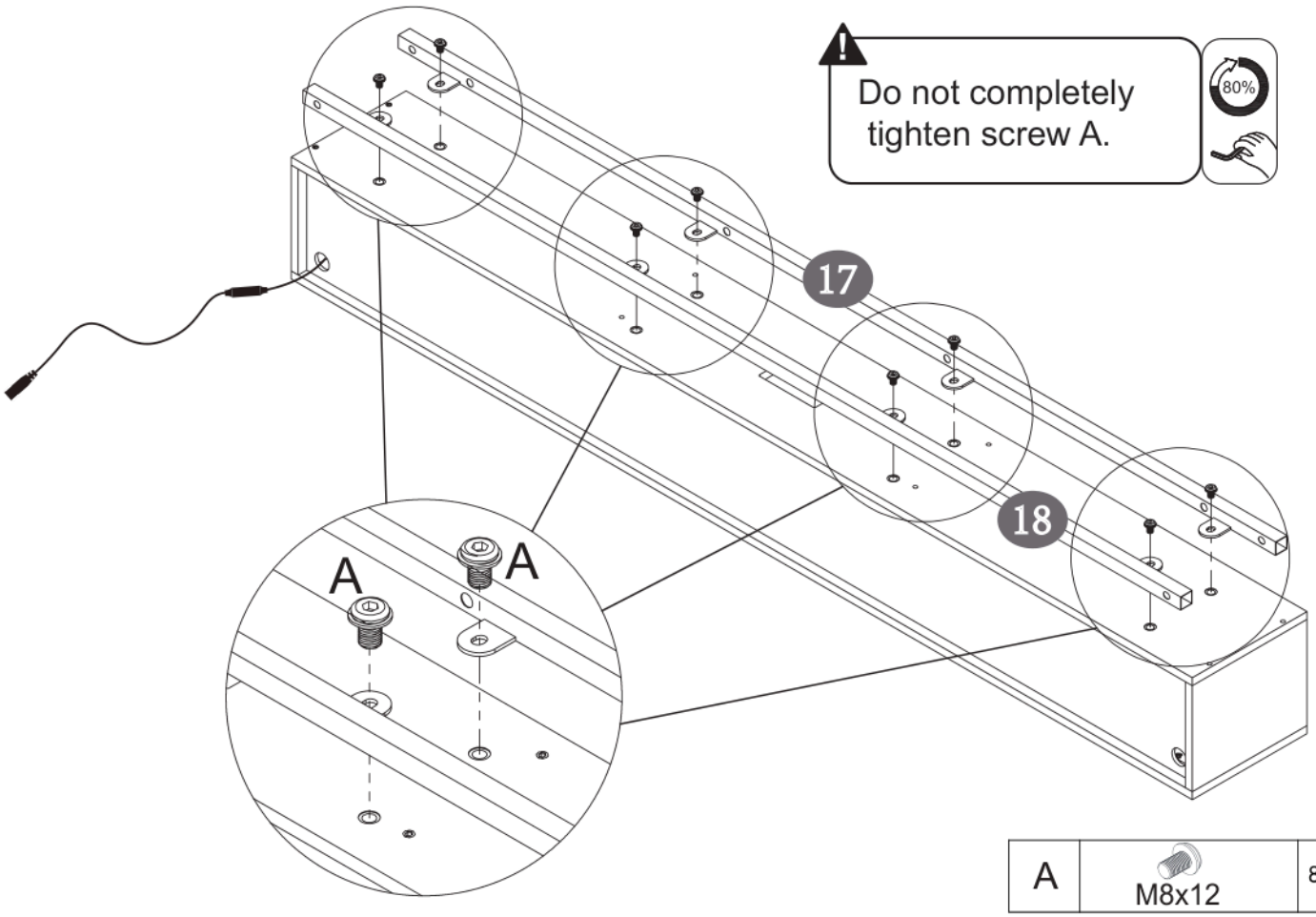

A	M8x12	8pcs

7

Do not completely tighten screw A.

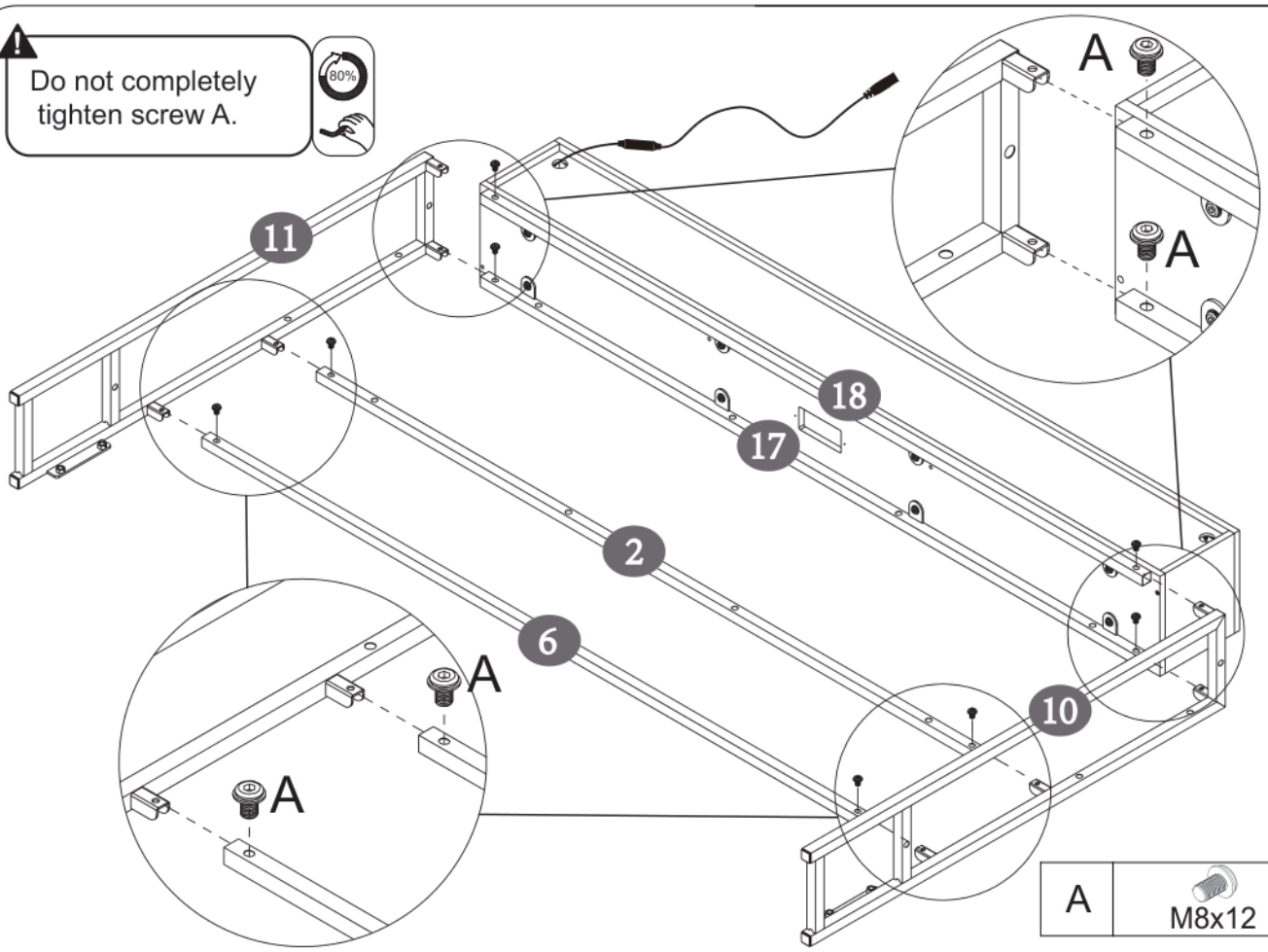

A	M8x12	8pcs

8

Tighten all the screws.

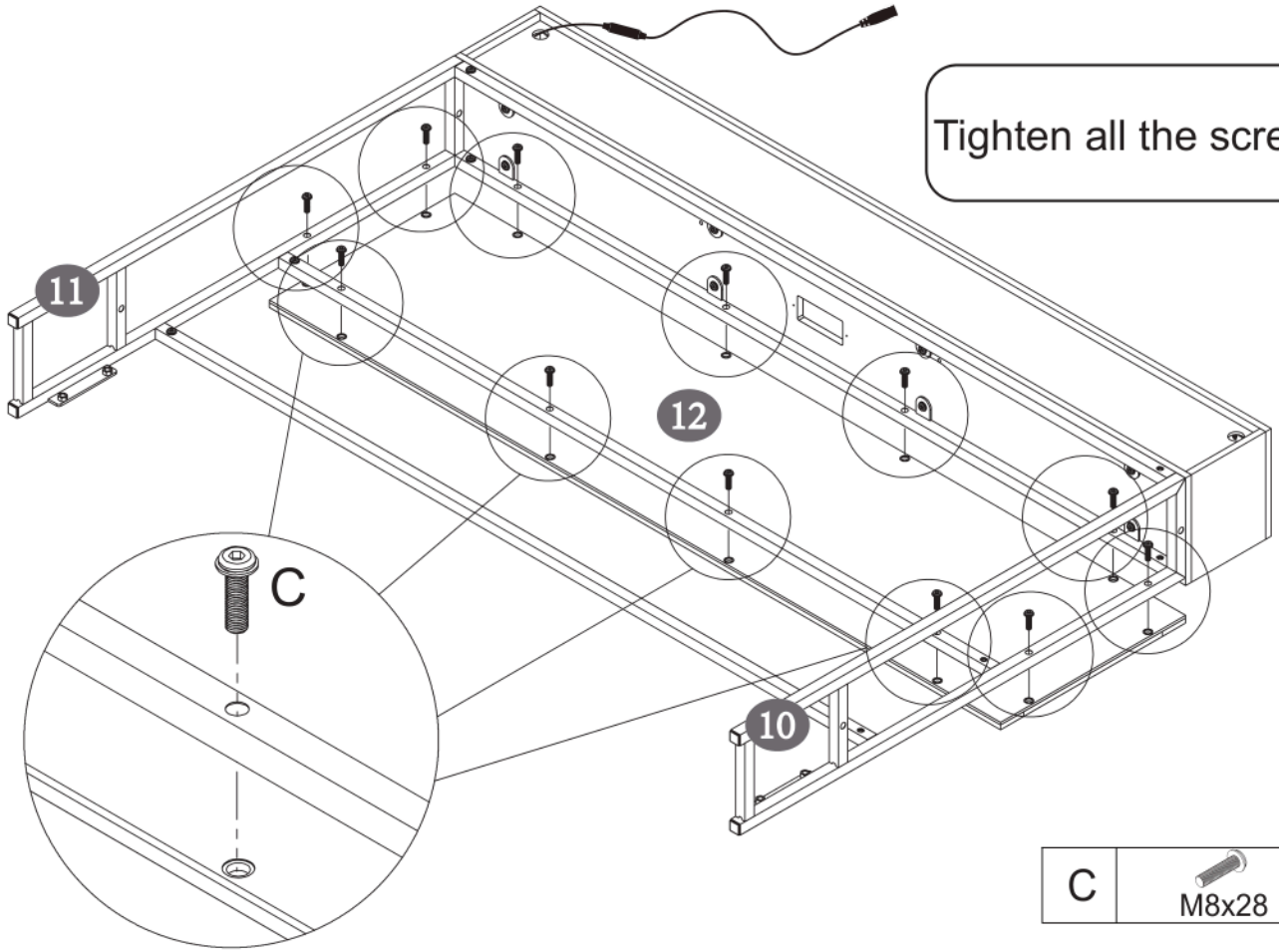

C	M8x28	12pcs

9

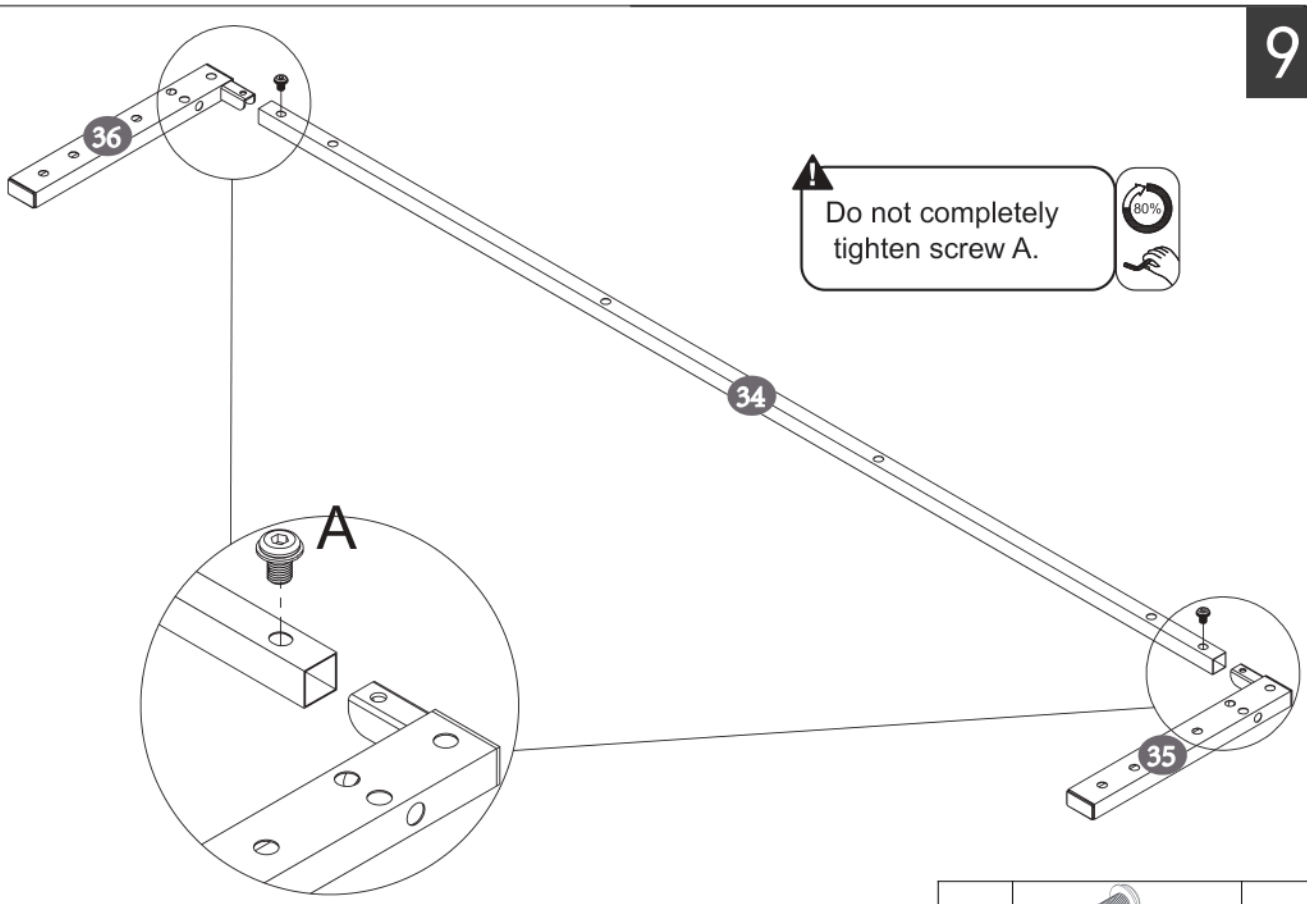

A	M8x12	2pcs

10

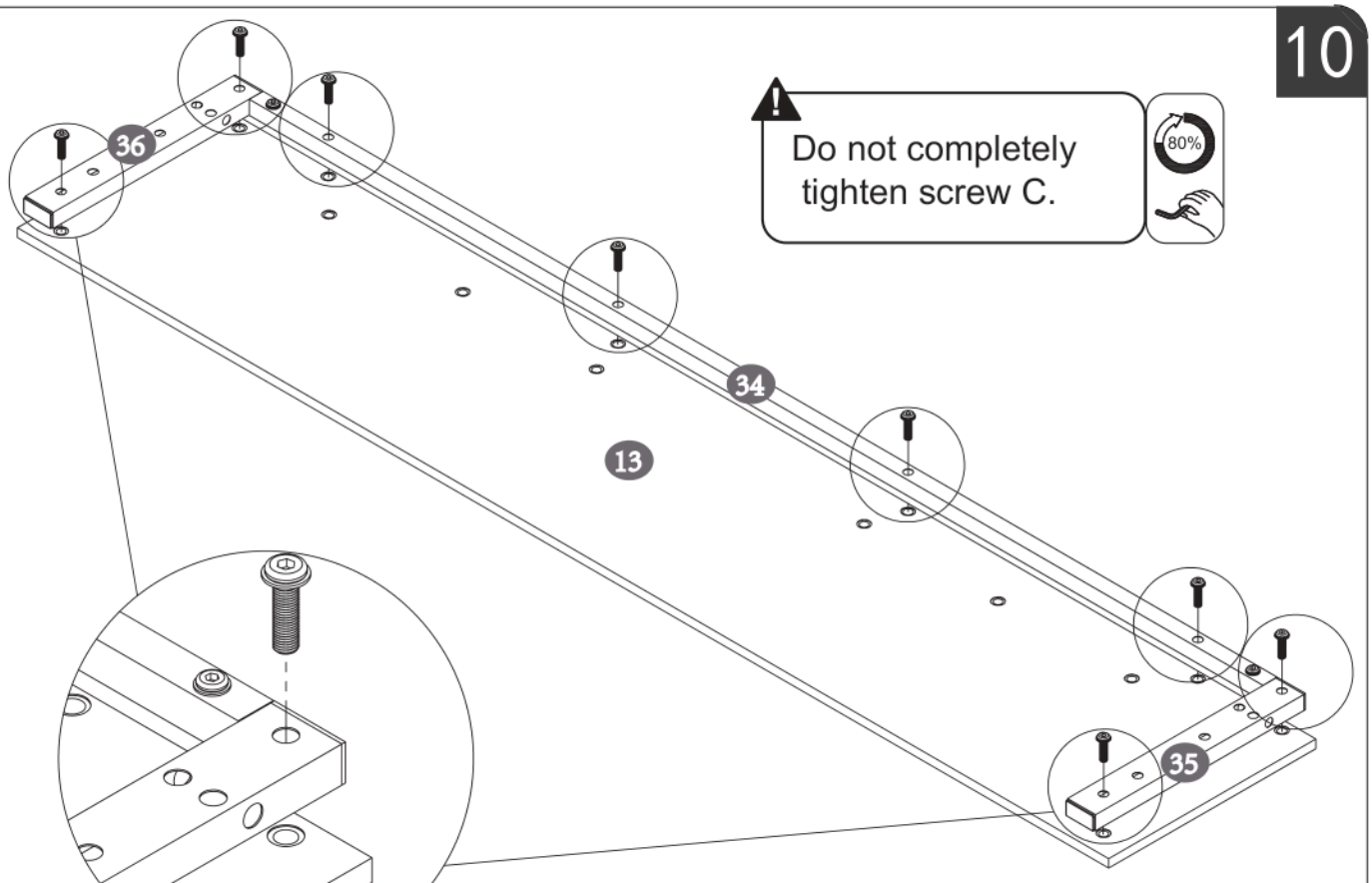

C	M8x28	8pcs

11

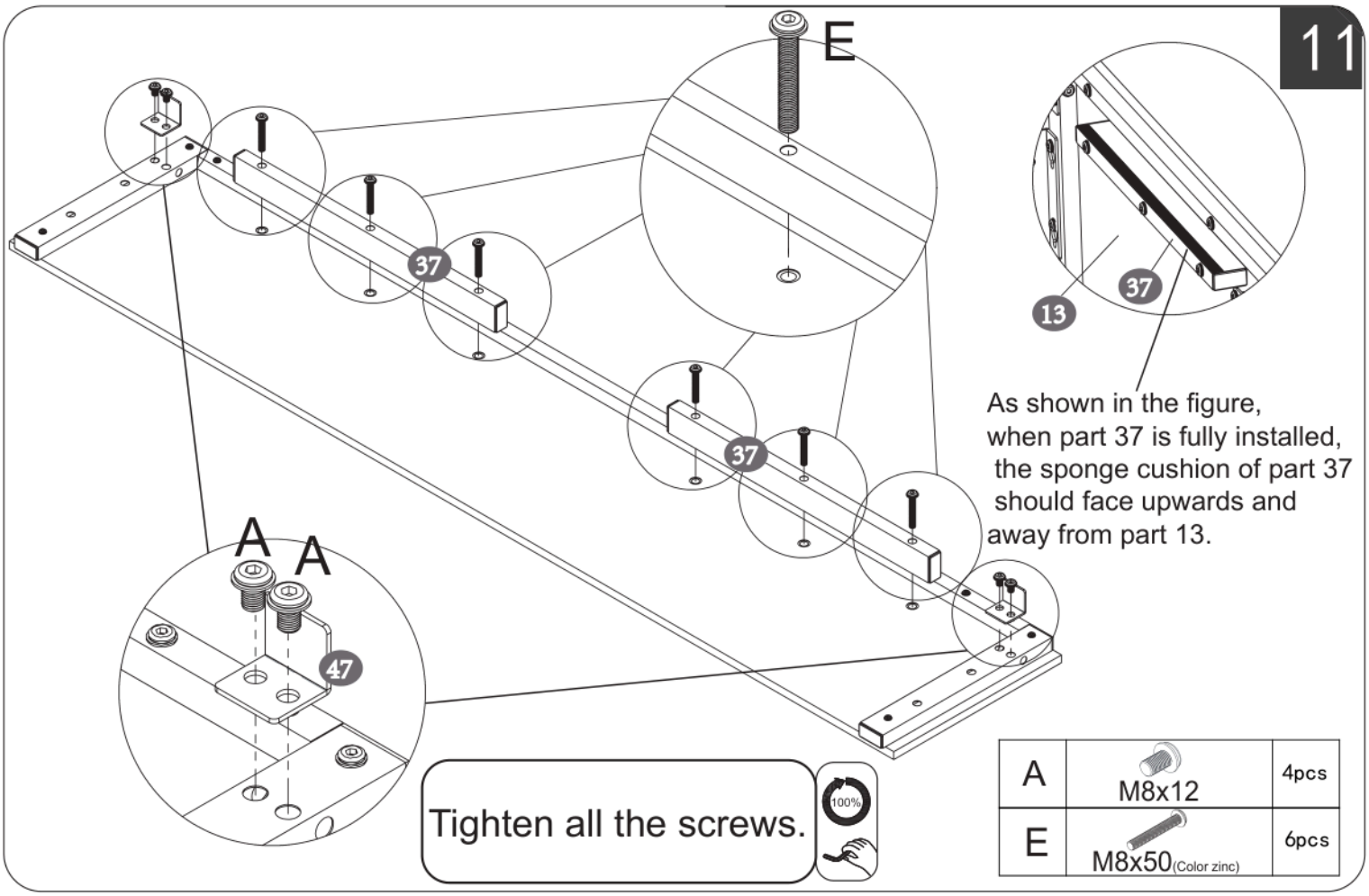

A	M8x12	4pcs
E	M8x50(Color zinc)	6pcs

12

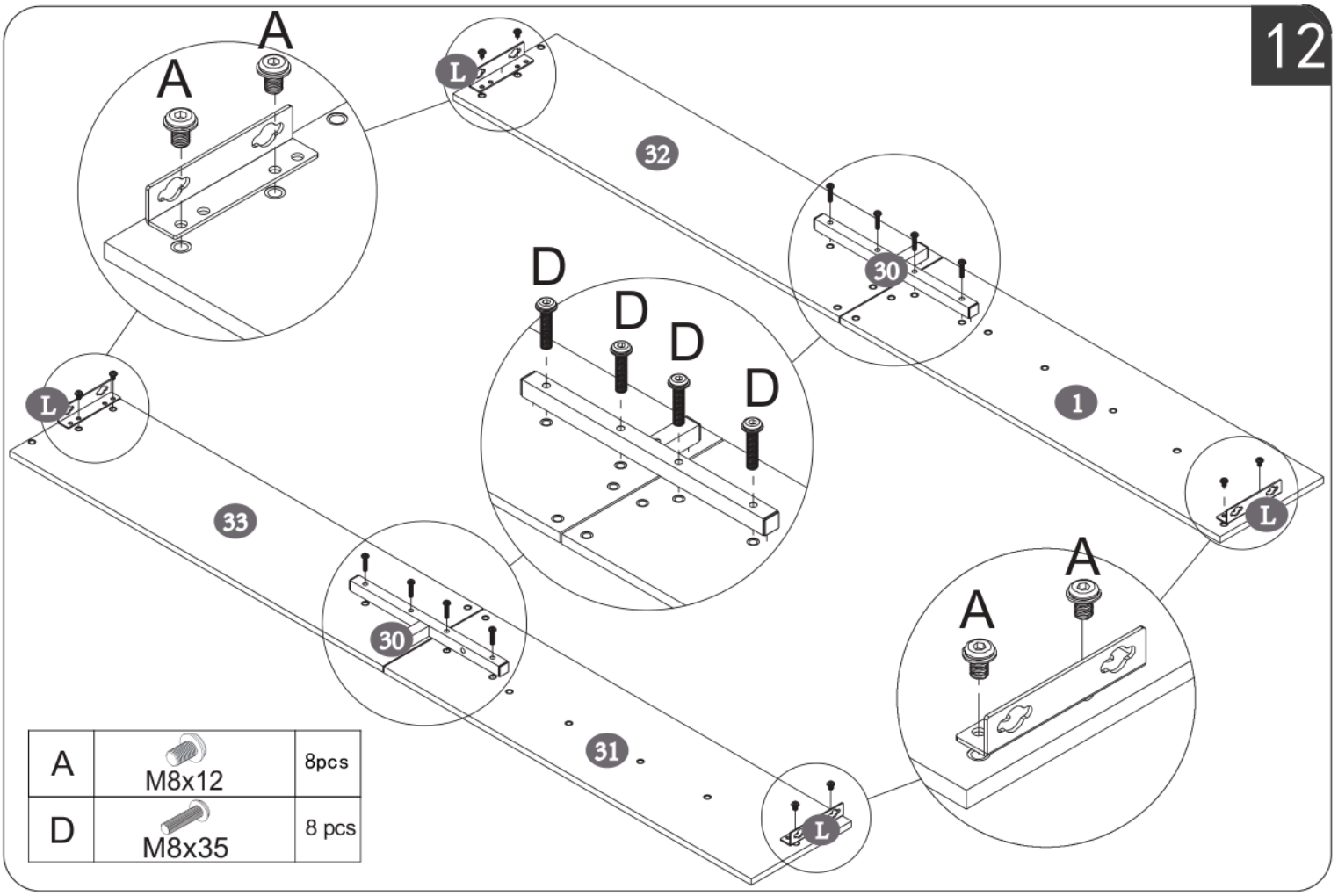

A	M8x12	8pcs
D	M8x35	8 pcs

13

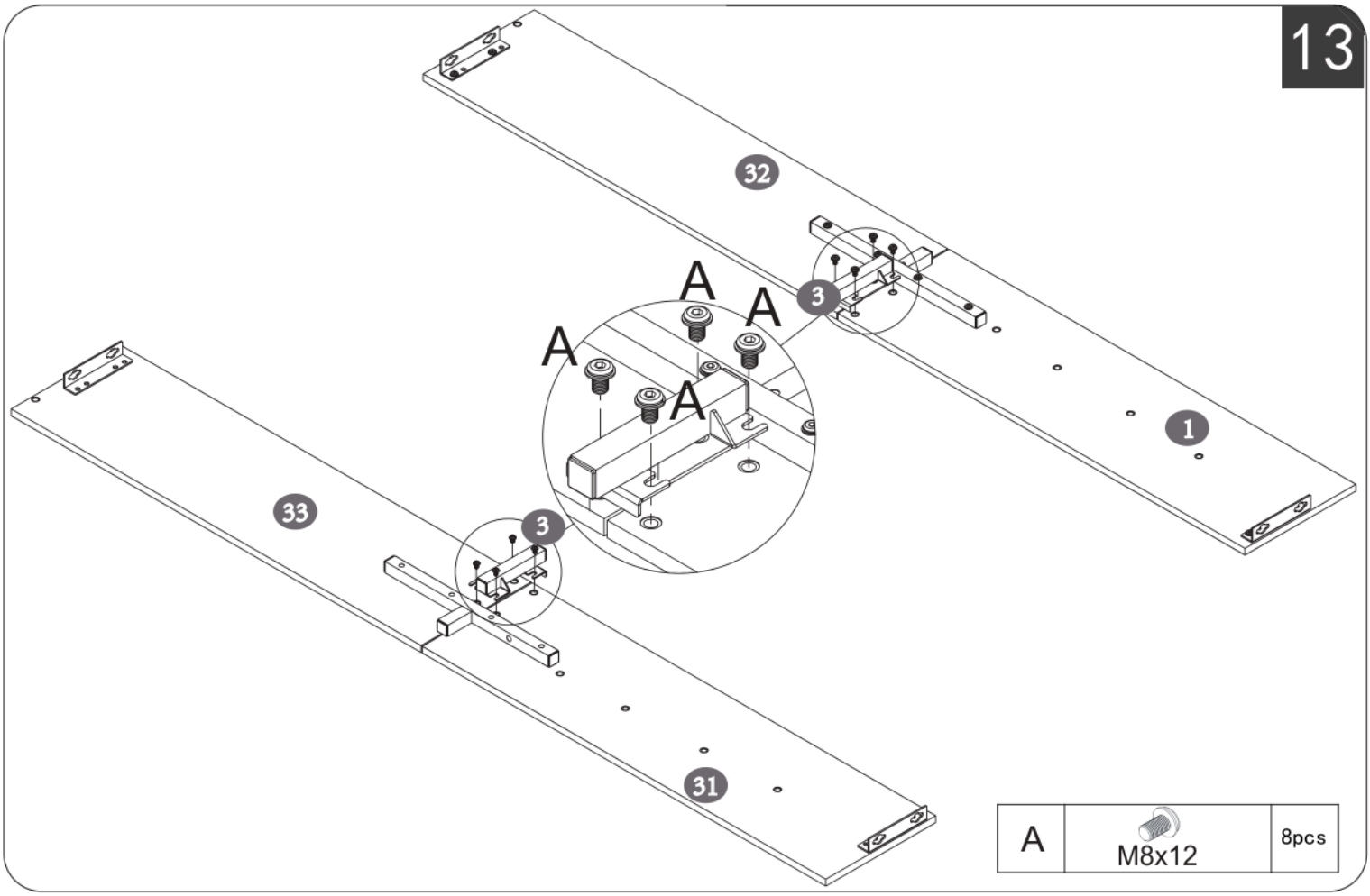

A	M8x12	8pcs

14

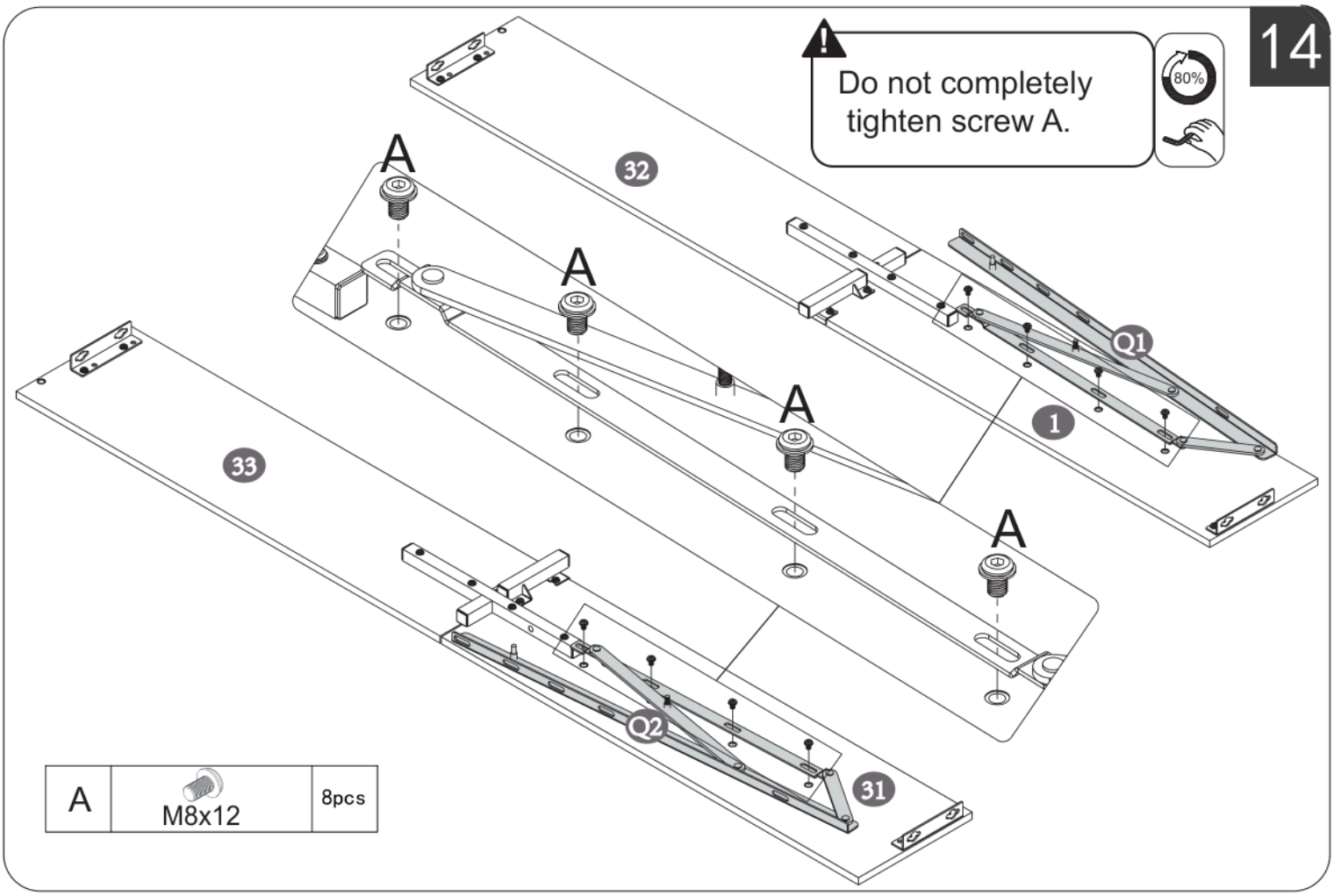

A	M8x12	8pcs

15

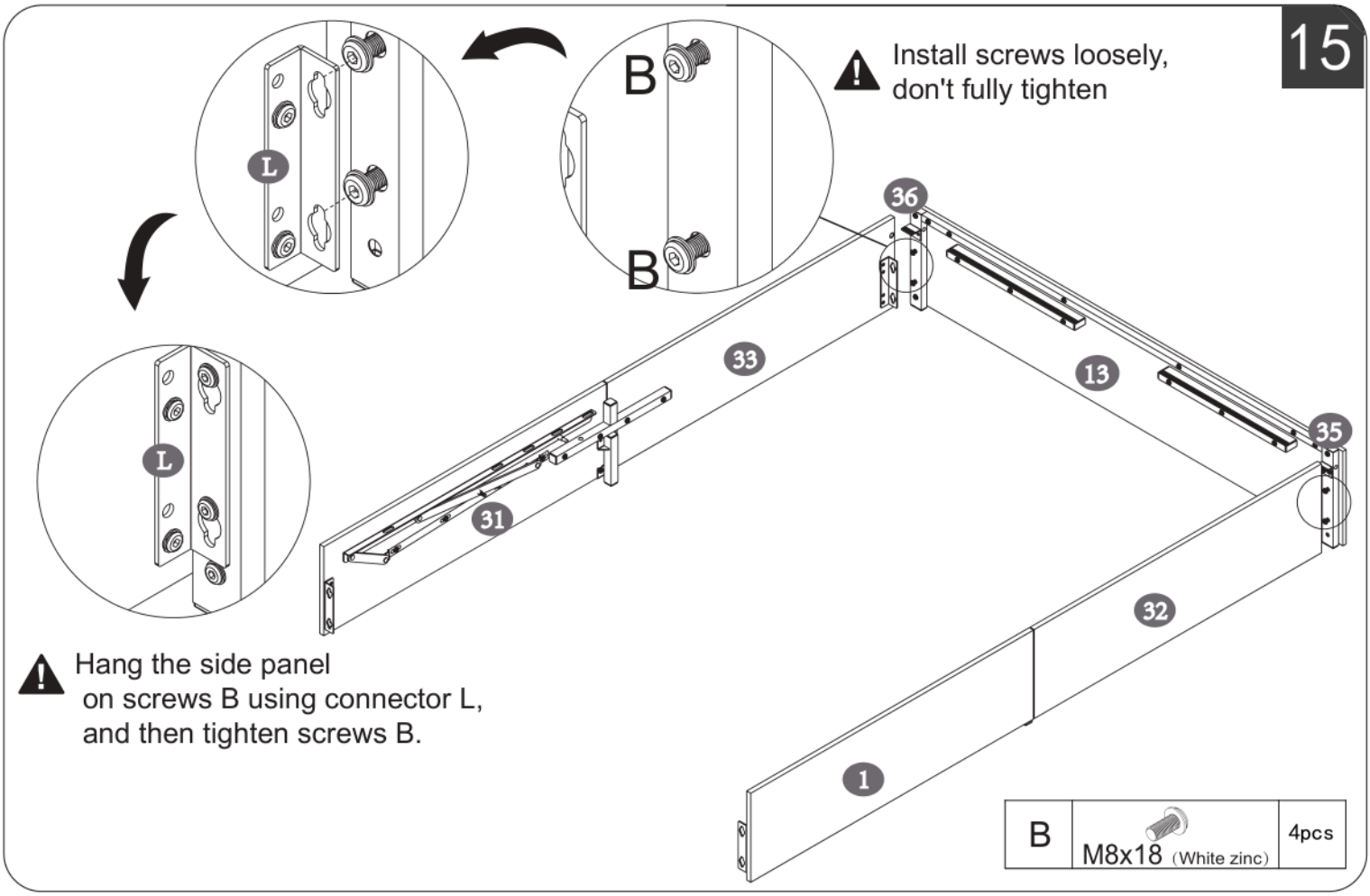

⚠ Install screws loosely, don't fully tighten

⚠ Hang the side panel on screws B using connector L, and then tighten screws B.

B	M8x18 (White zinc)	4pcs

16

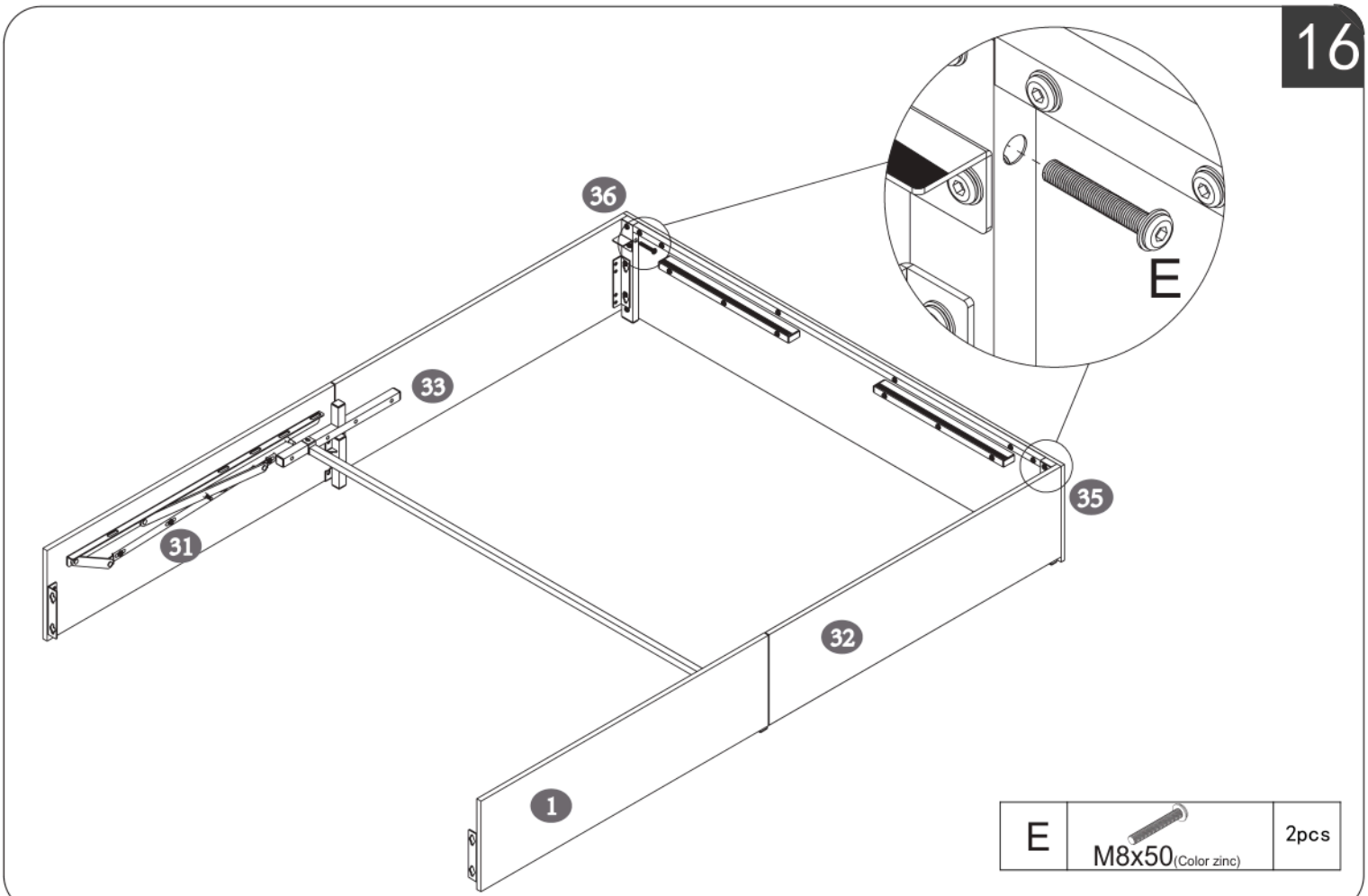

E	M8x50(Color zinc)	2pcs

17

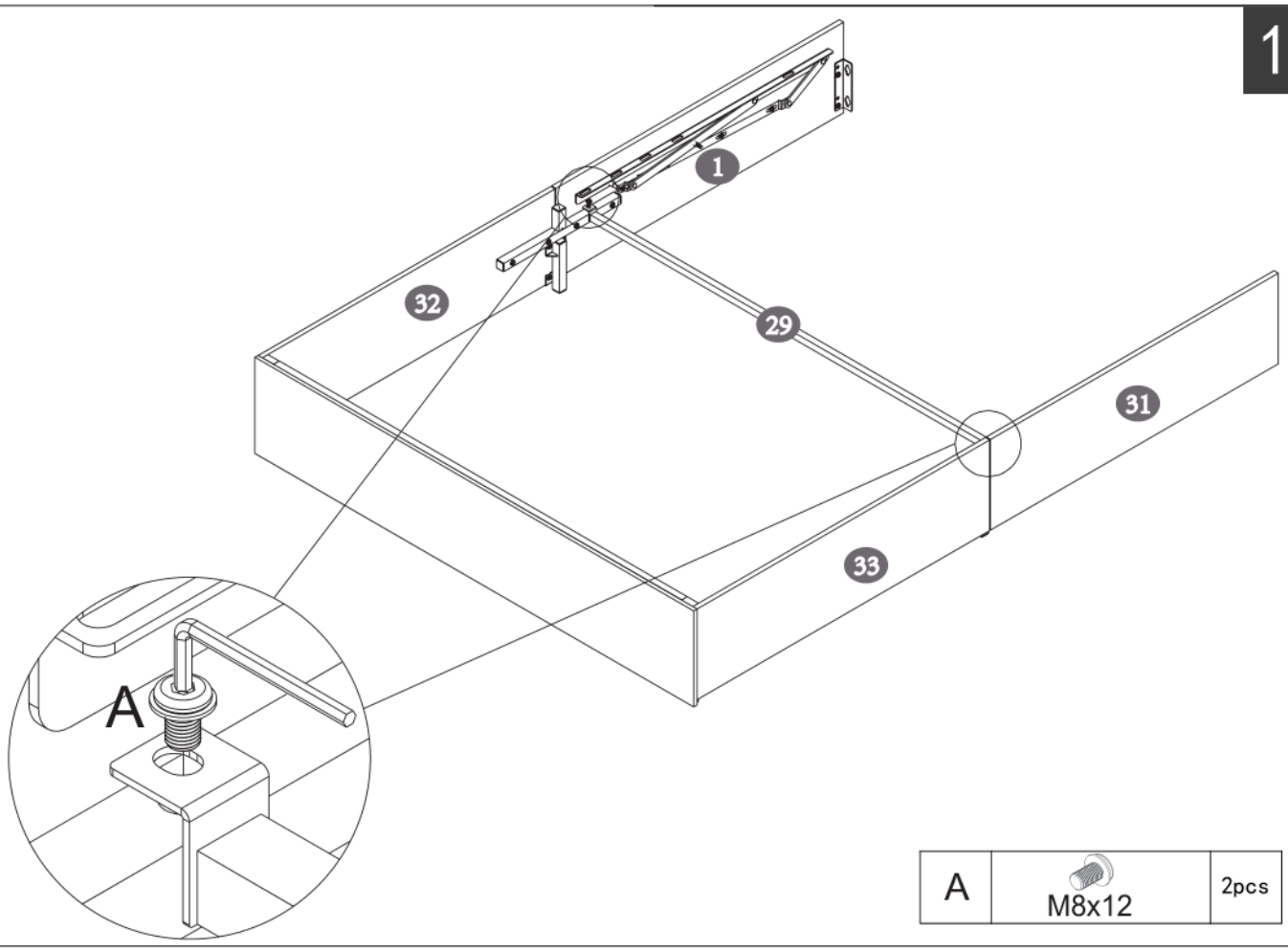

A	M8x12	2pcs

18

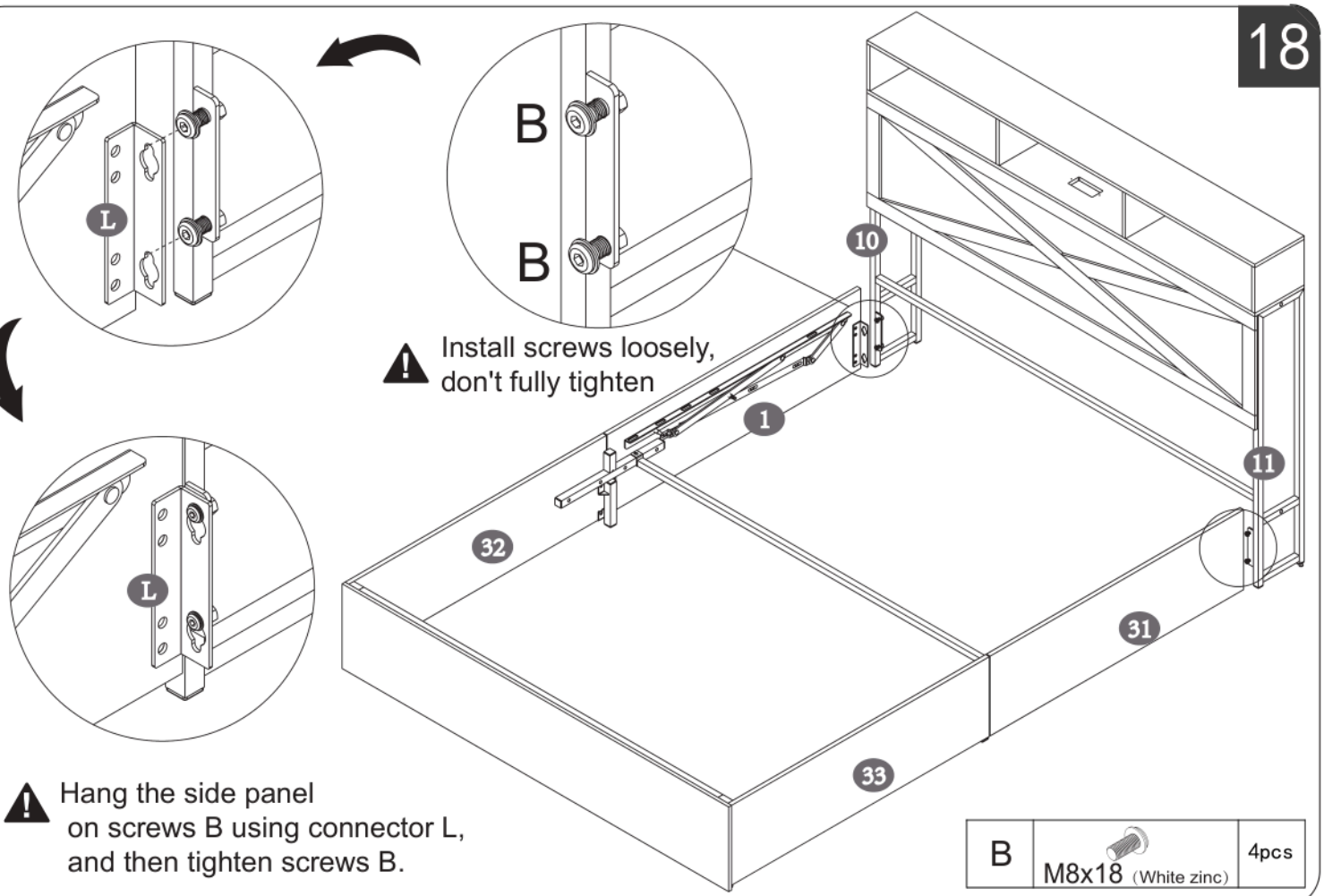

B	M8x18 (White zinc)	4pcs

19

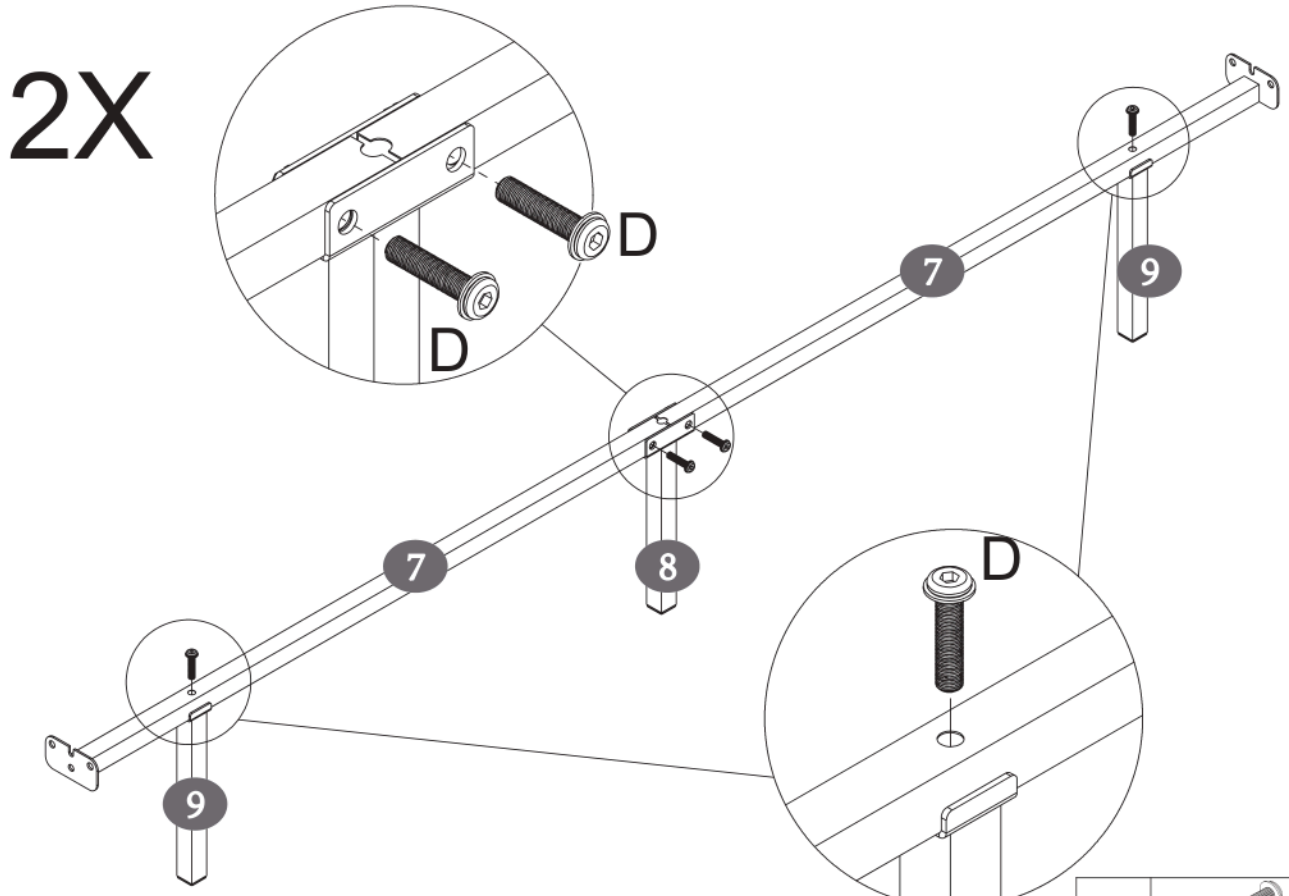

D	M8x35	8 pcs

20

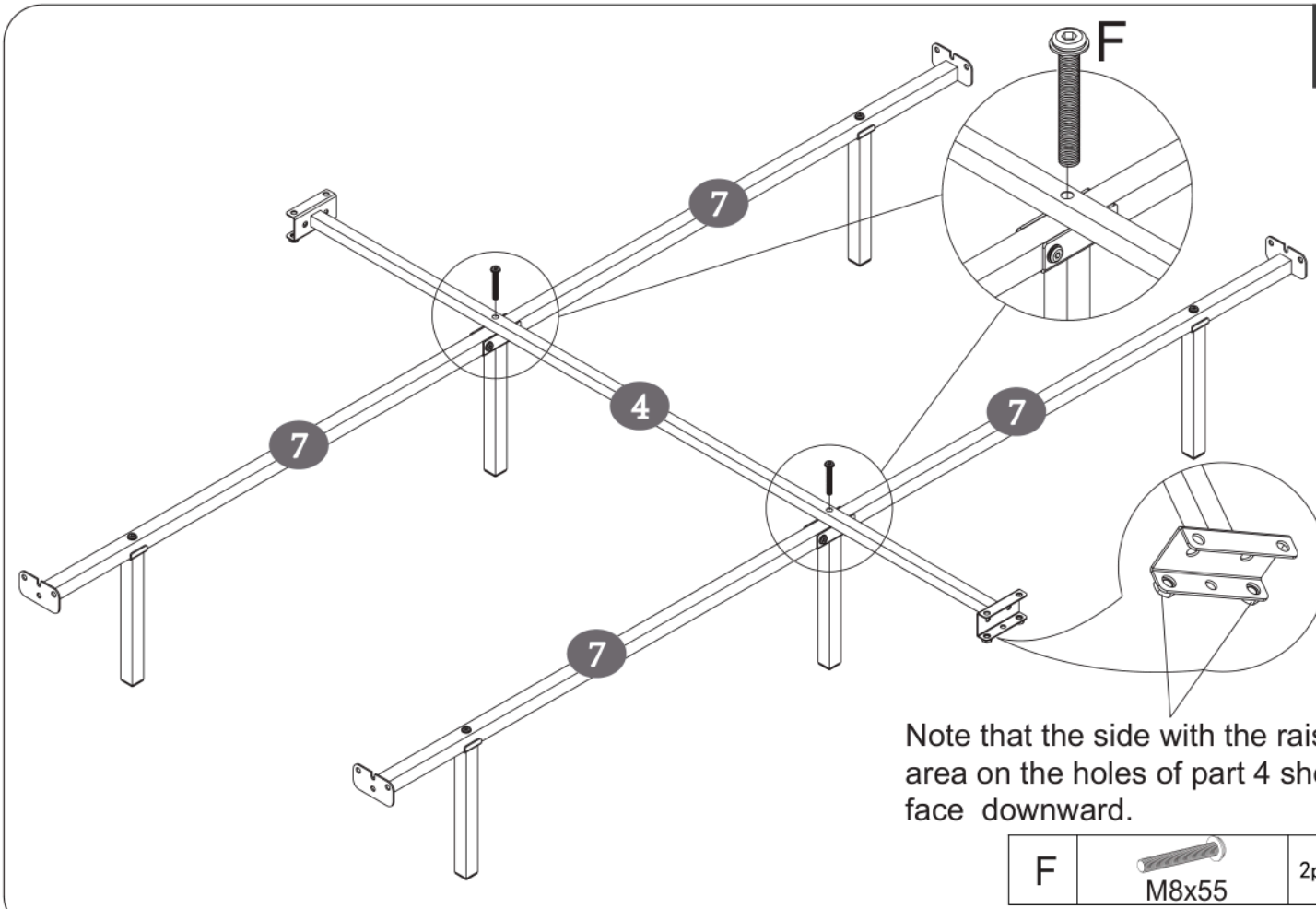

Note that the side with the raised area on the holes of part 4 should face downward.

F	M8x55	2pcs

21

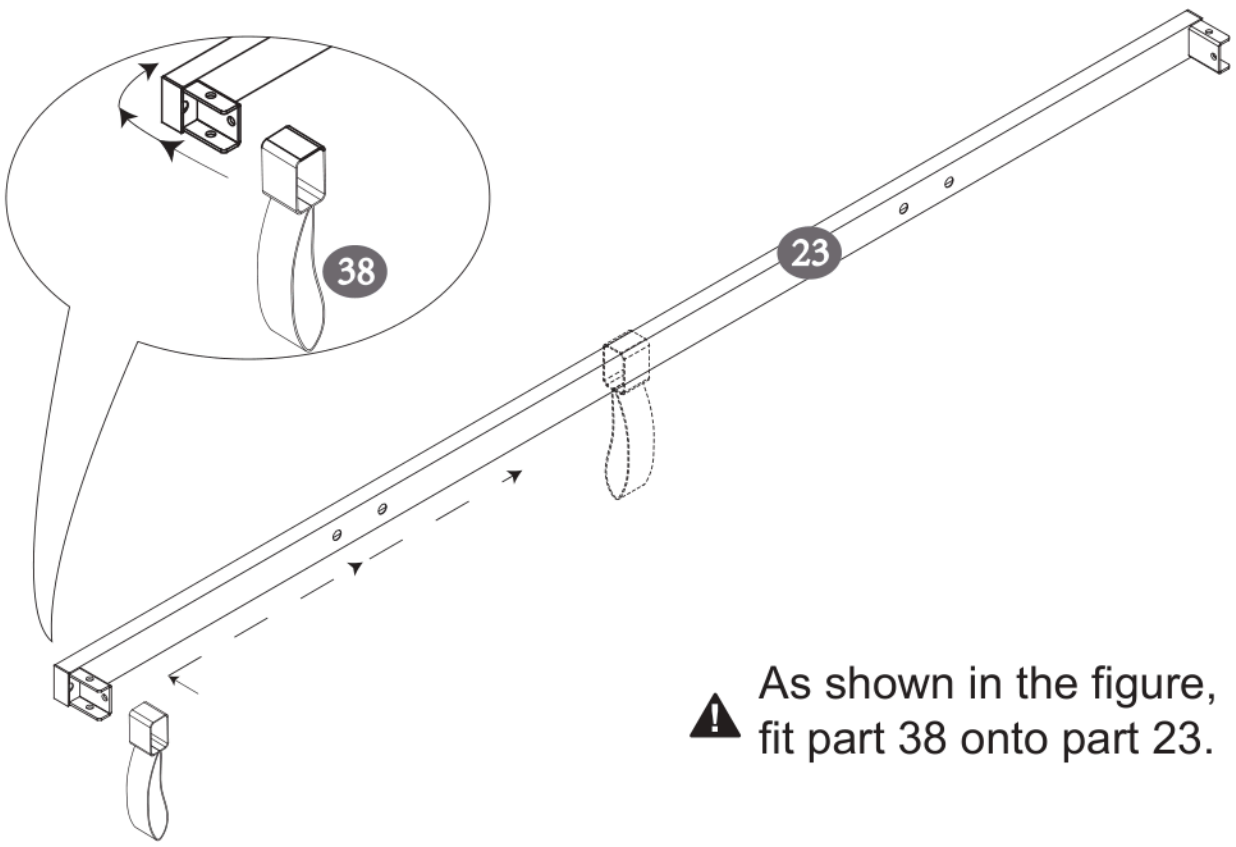

⚠ As shown in the figure, fit part 38 onto part 23.

22

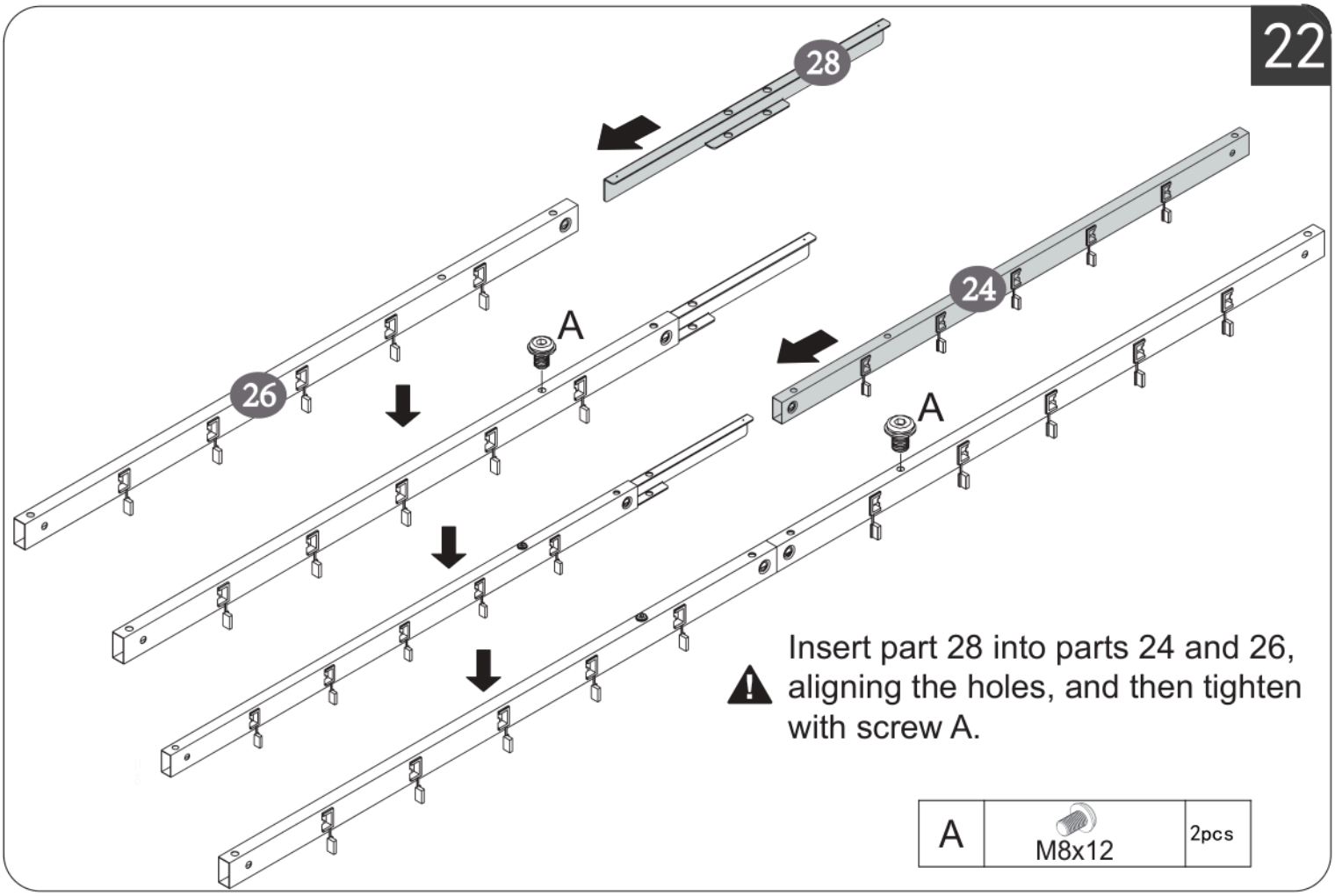

⚠ Insert part 28 into parts 24 and 26, aligning the holes, and then tighten with screw A.

A	M8x12	2pcs

23

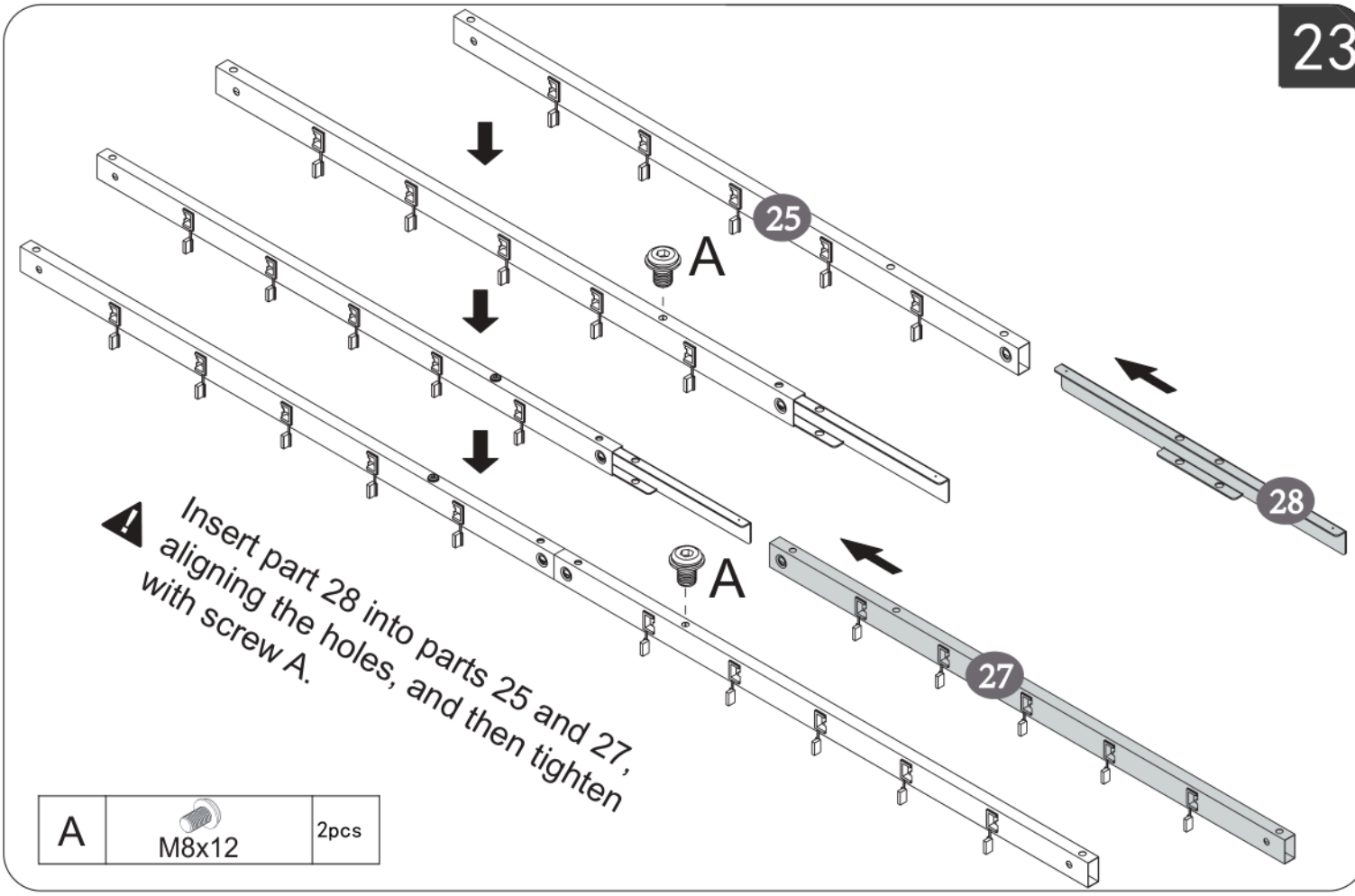

A	M8x12	2pcs

24

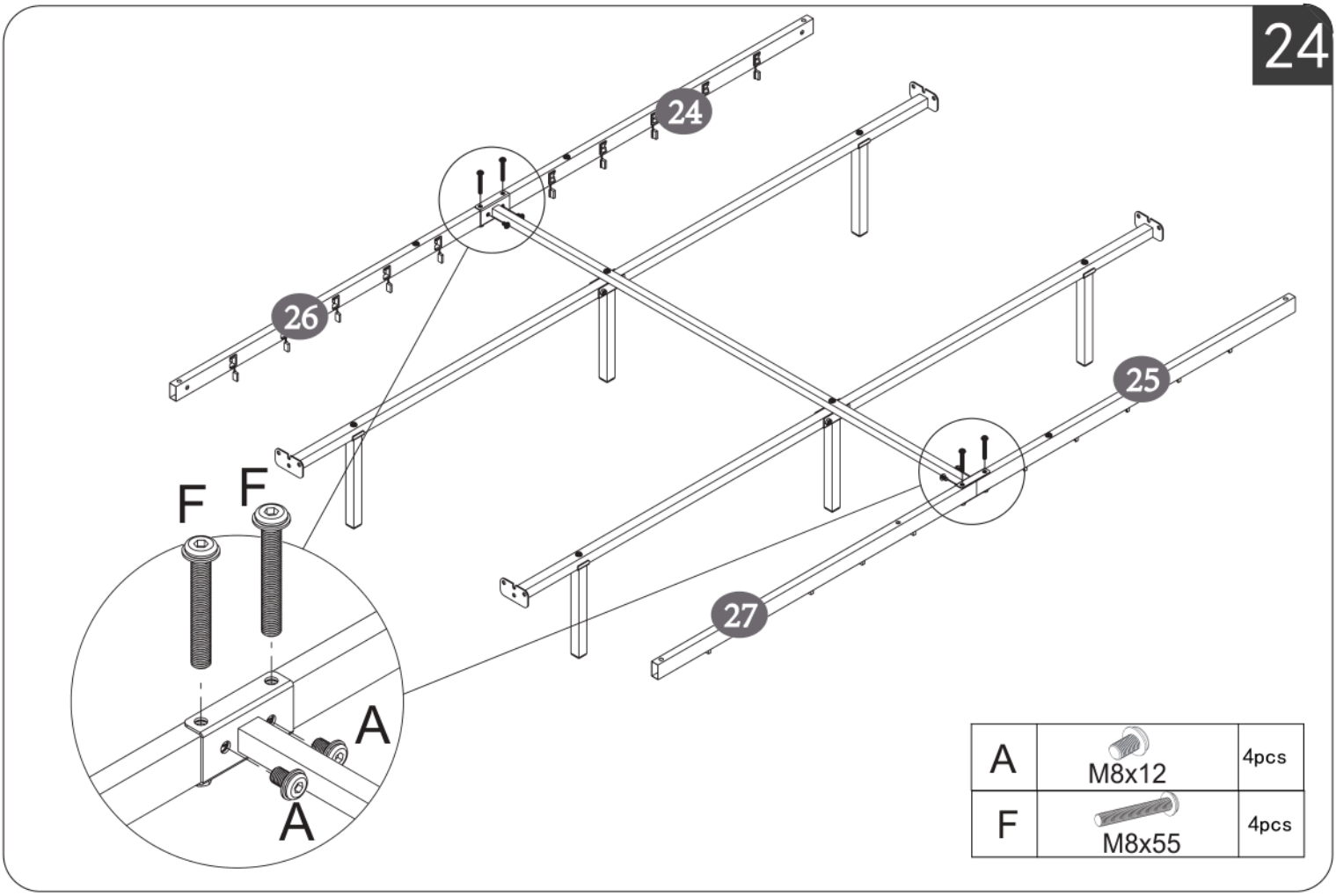

A	M8x12	4pcs
F	M8x55	4pcs

25

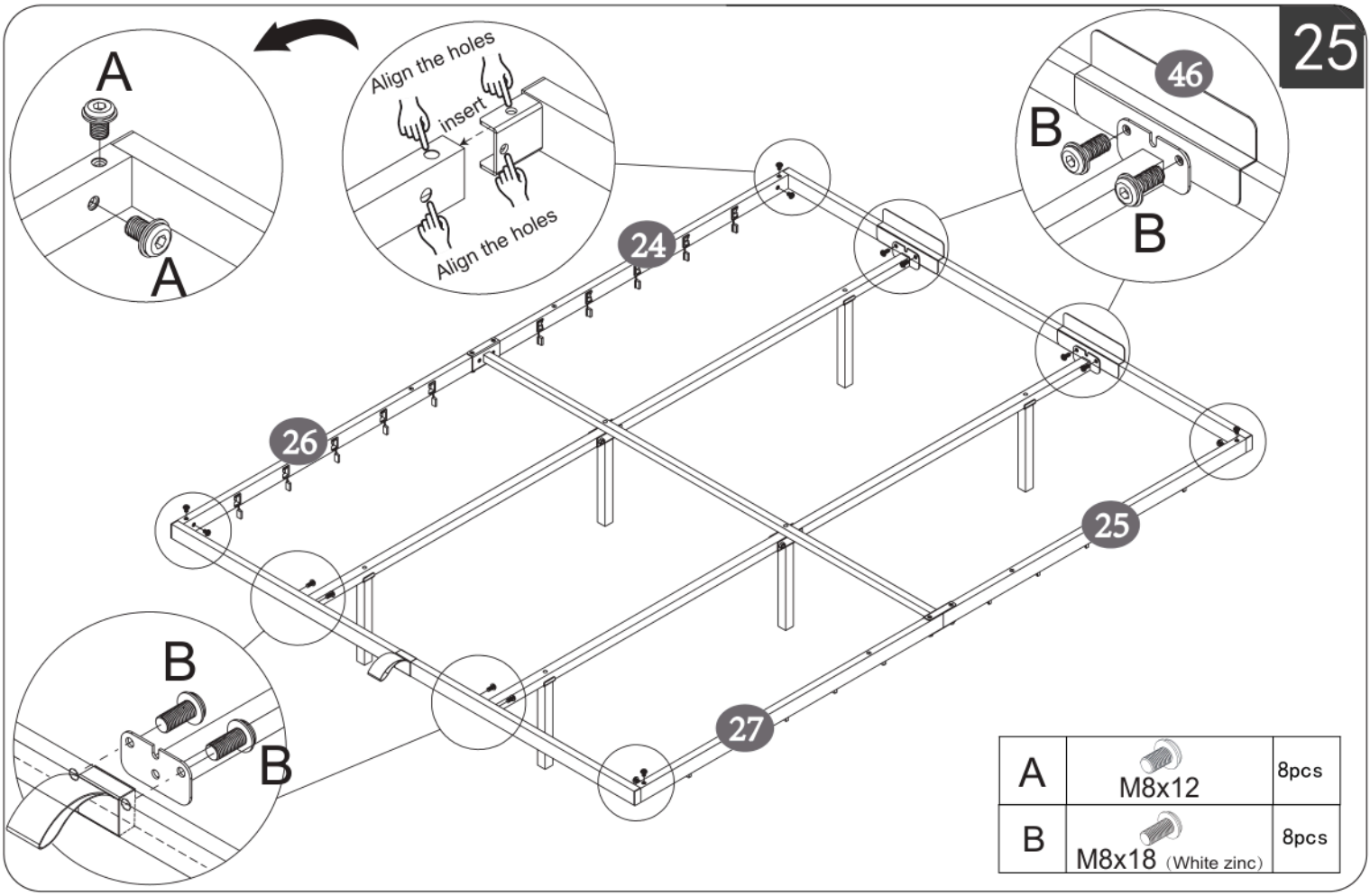

A	M8x12	8pcs
B	M8x18 (White zinc)	8pcs

26

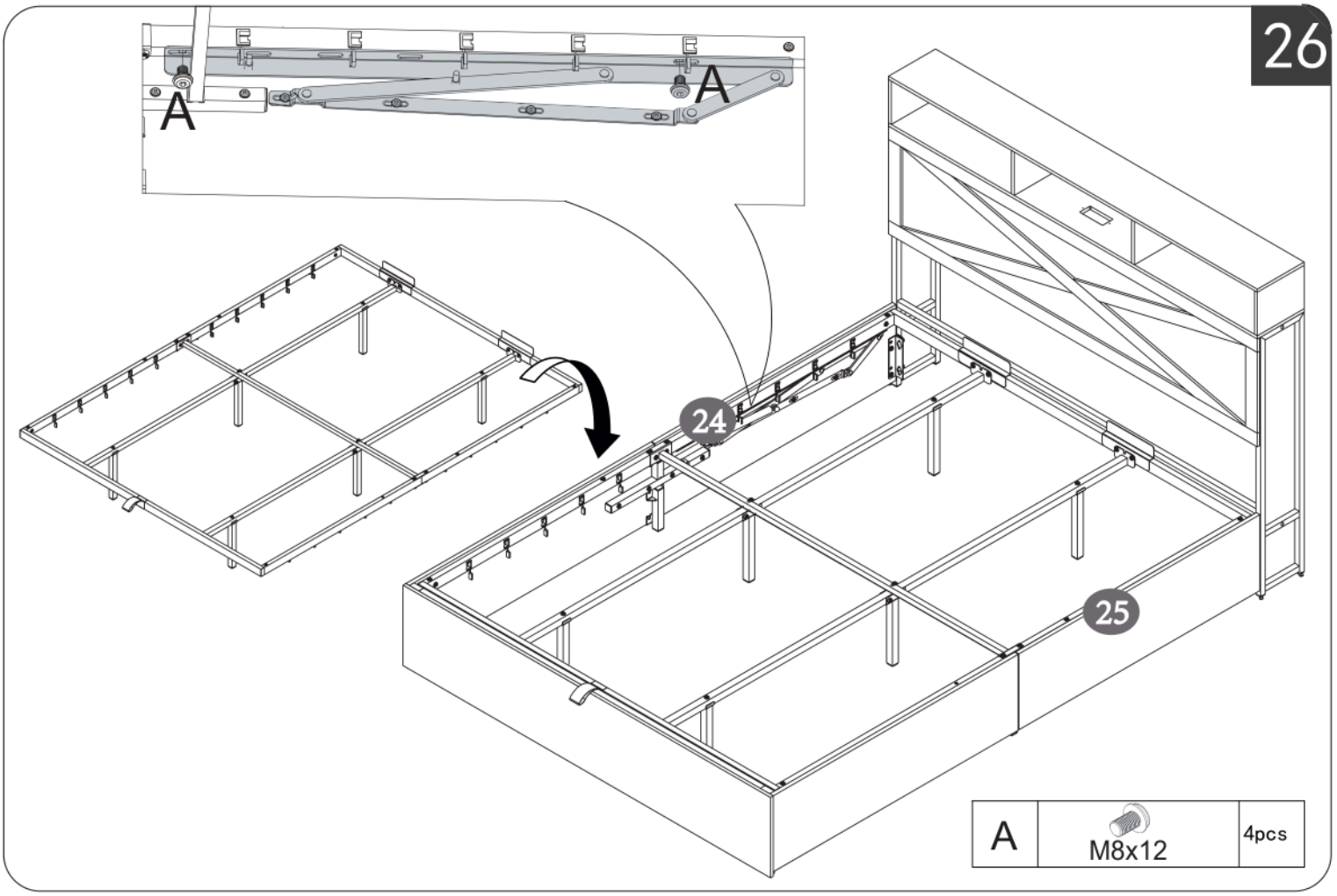

A	M8x12	4pcs

27

⚠ Lift the frame and install part Q3.

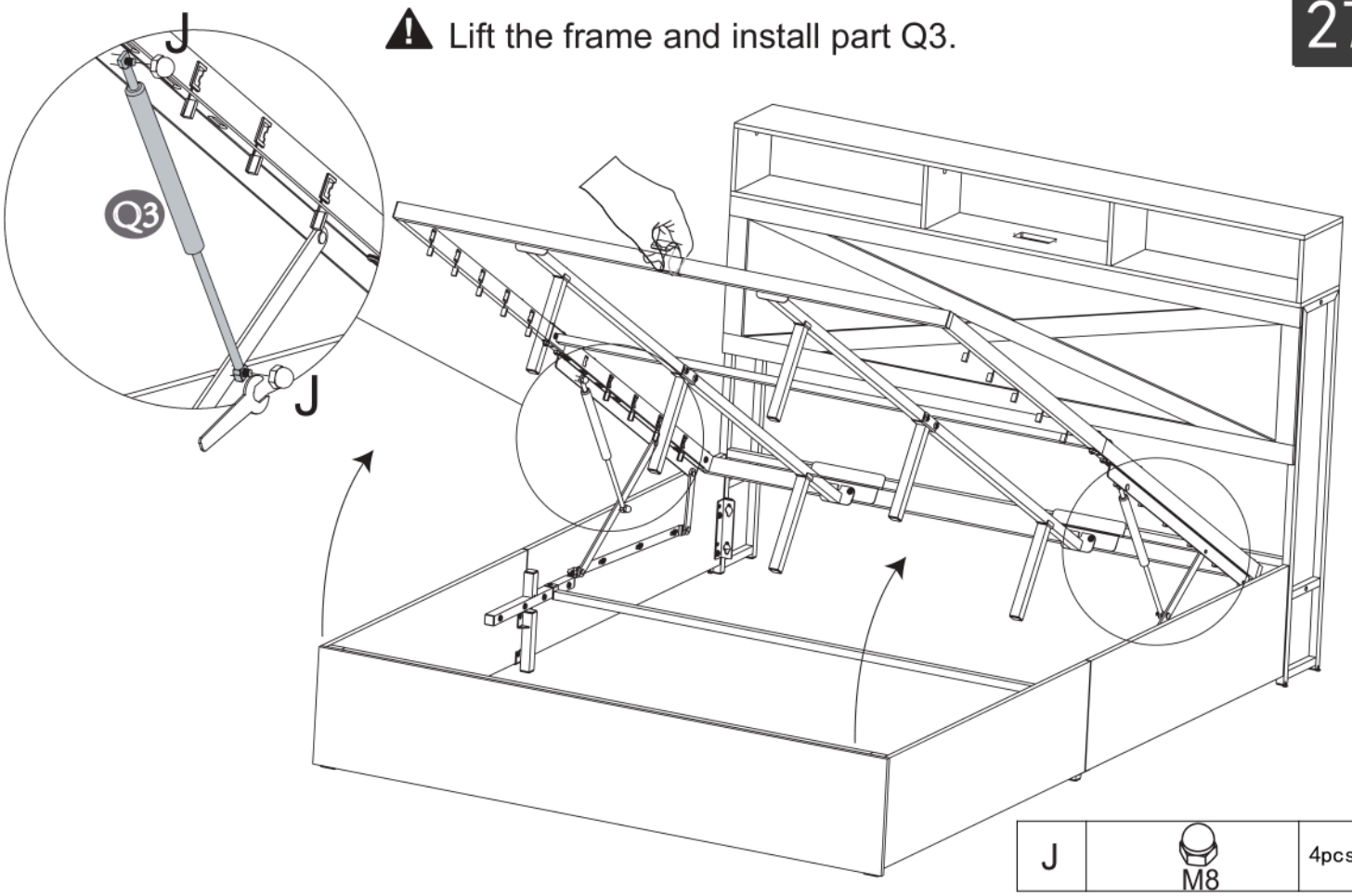

J	M8	4pcs

28

⚠ Please push the fastener block c firmly to ensure a secure installation.

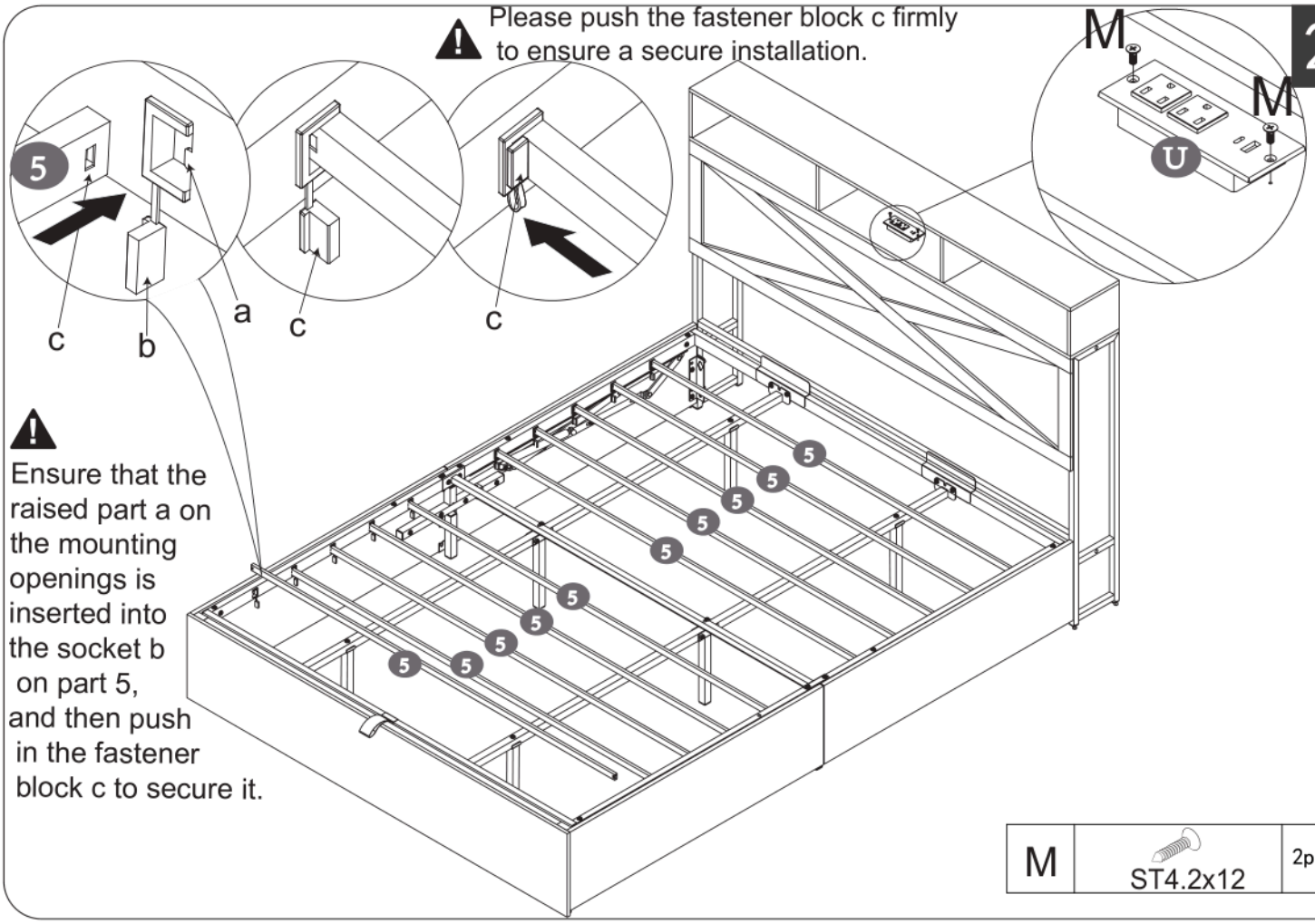

⚠ Ensure that the raised part a on the mounting openings is inserted into the socket b on part 5, and then push in the fastener block c to secure it.

M	ST4.2x12	2pcs

29

2X

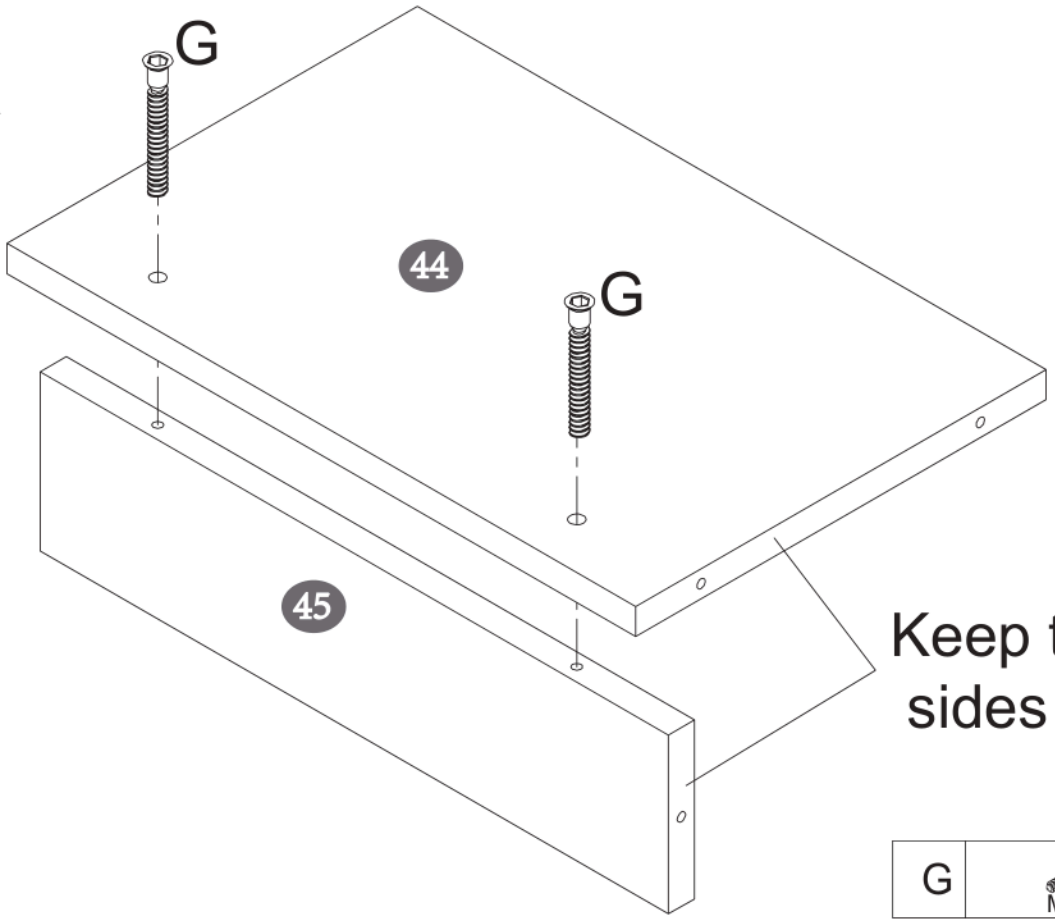

Keep the two sides flush

G	M5x40	4pcs

30

2X

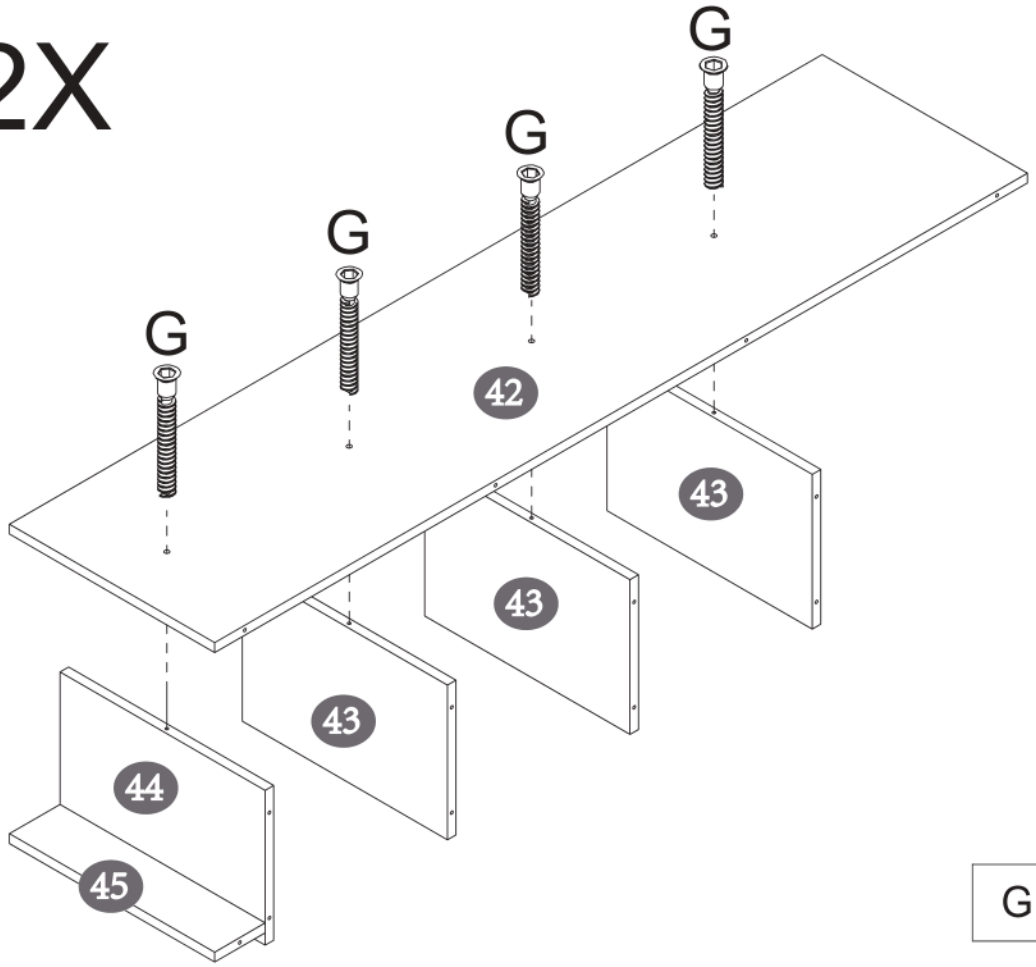

G	M5x40	8pcs

31

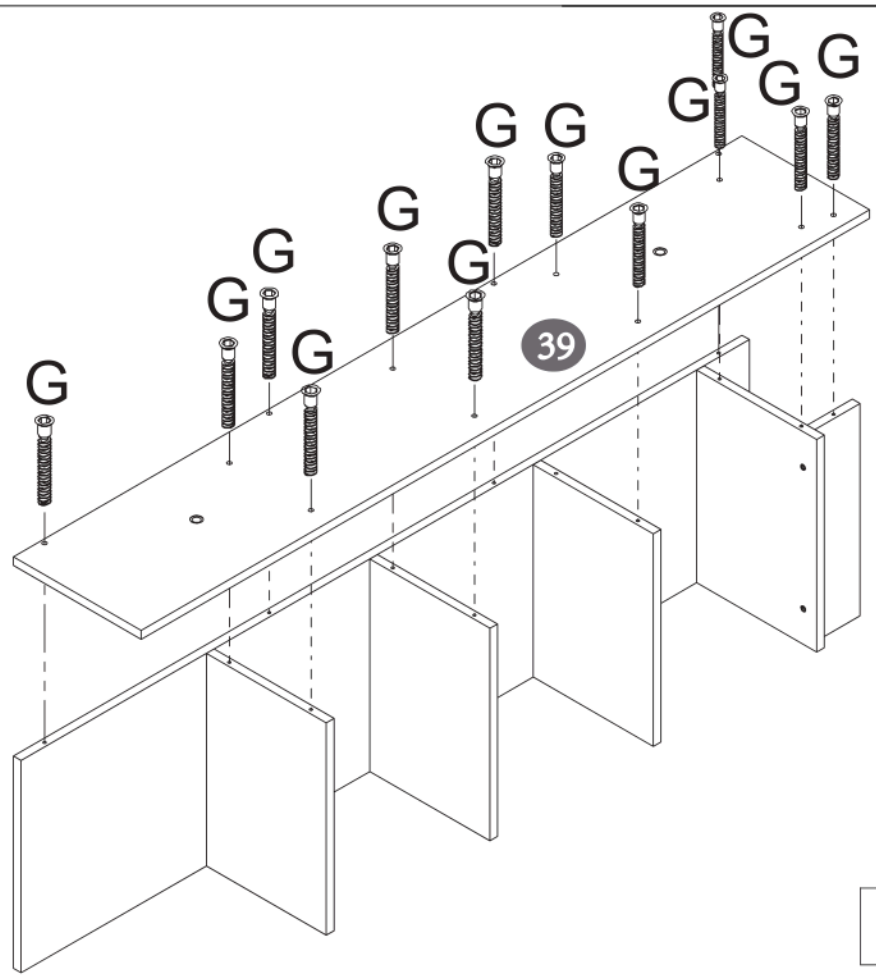

G	 M5x40	13pcs

32

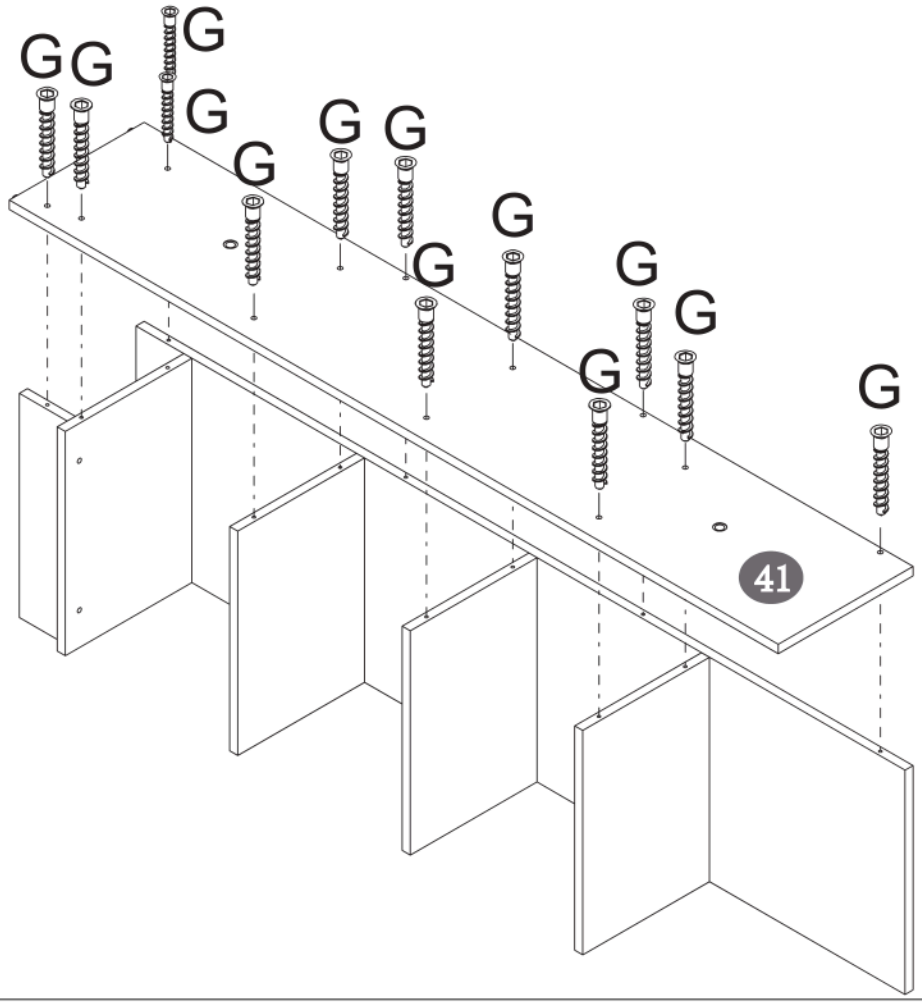

G	 M5x40	13pcs

33

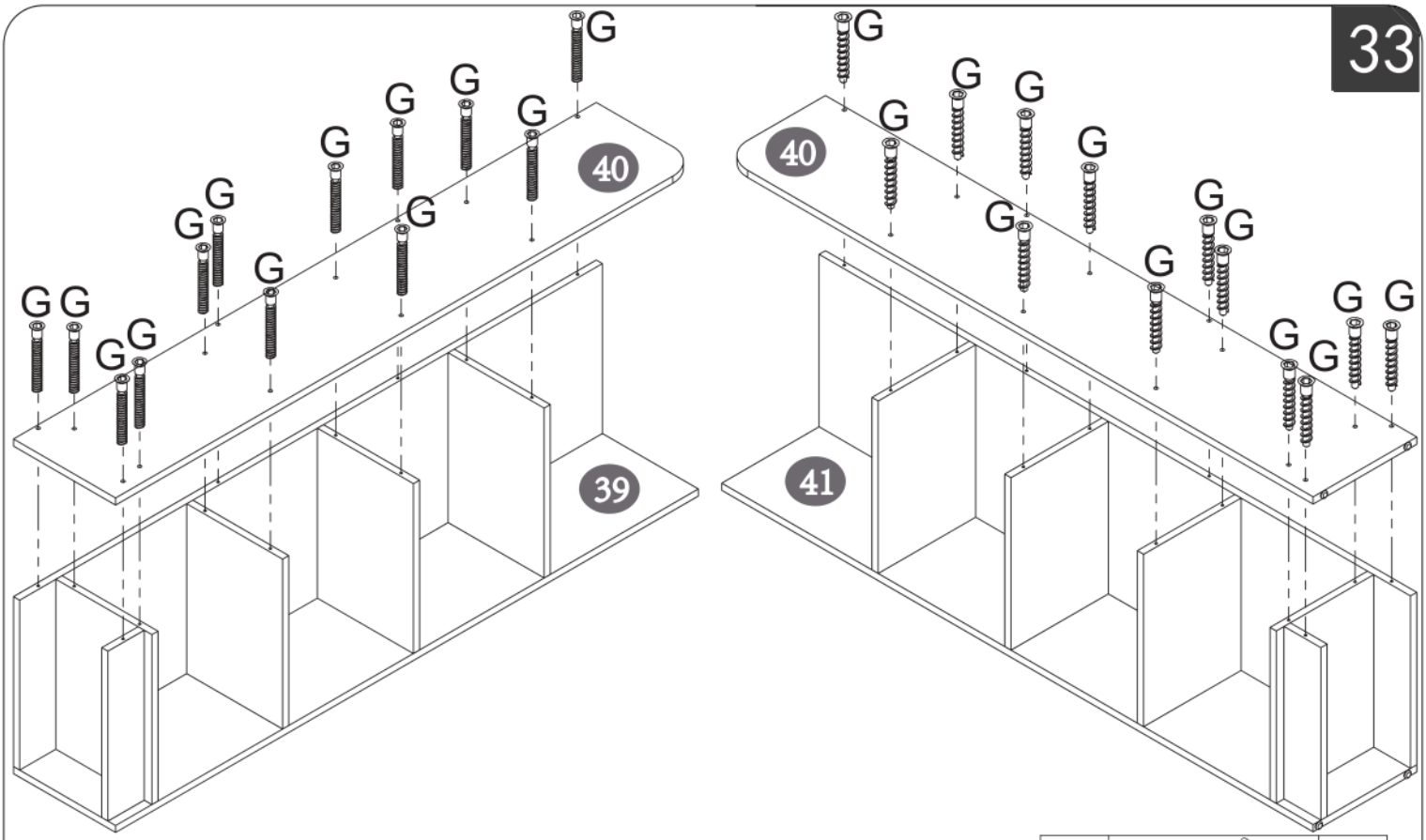

G	M5x40	26pcs

34

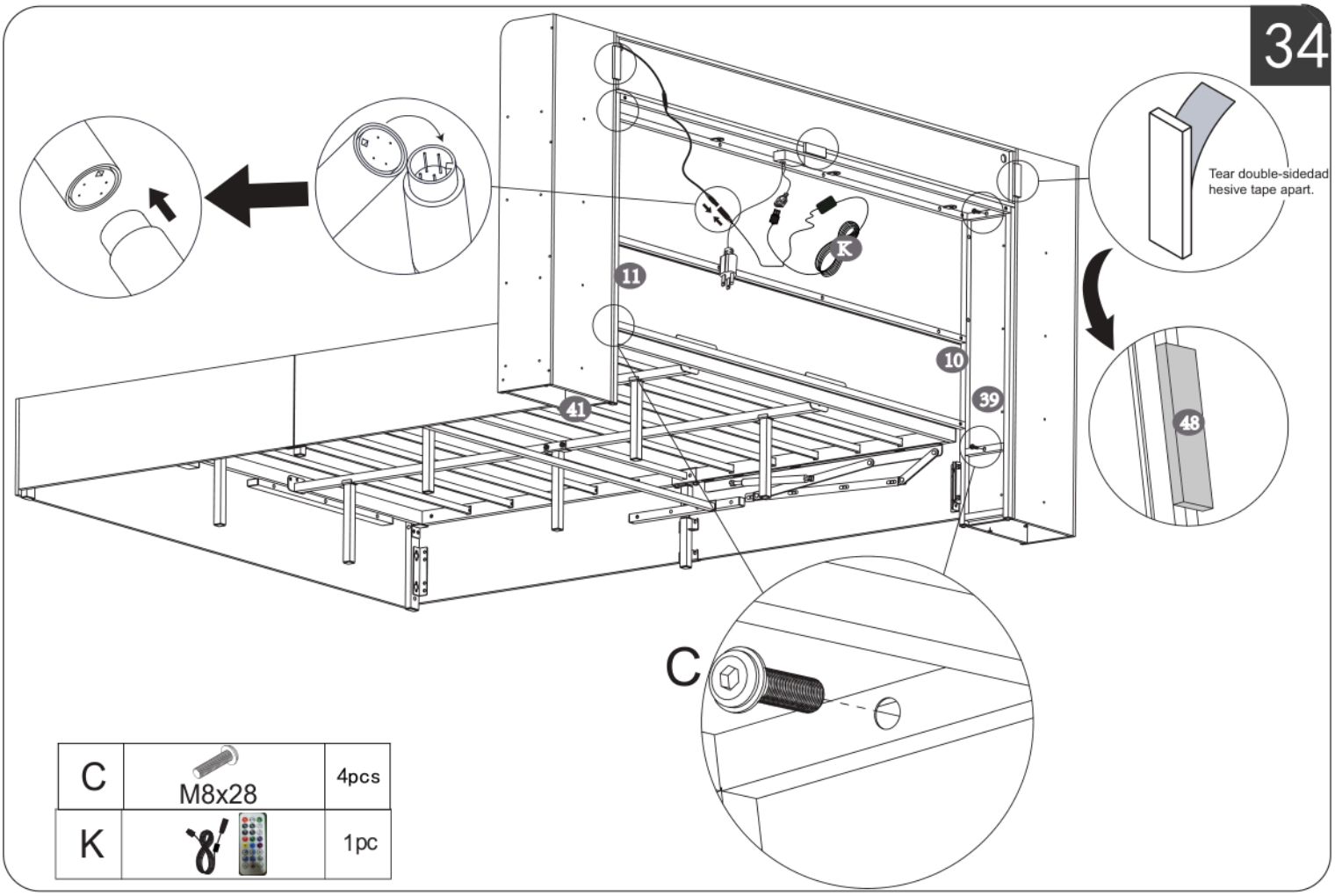

C	M8x28	4pcs
K		1pc

37

If you do not wish to use the storage cabinets on either side of the headboard, you can remove them by unscrewing the screws.

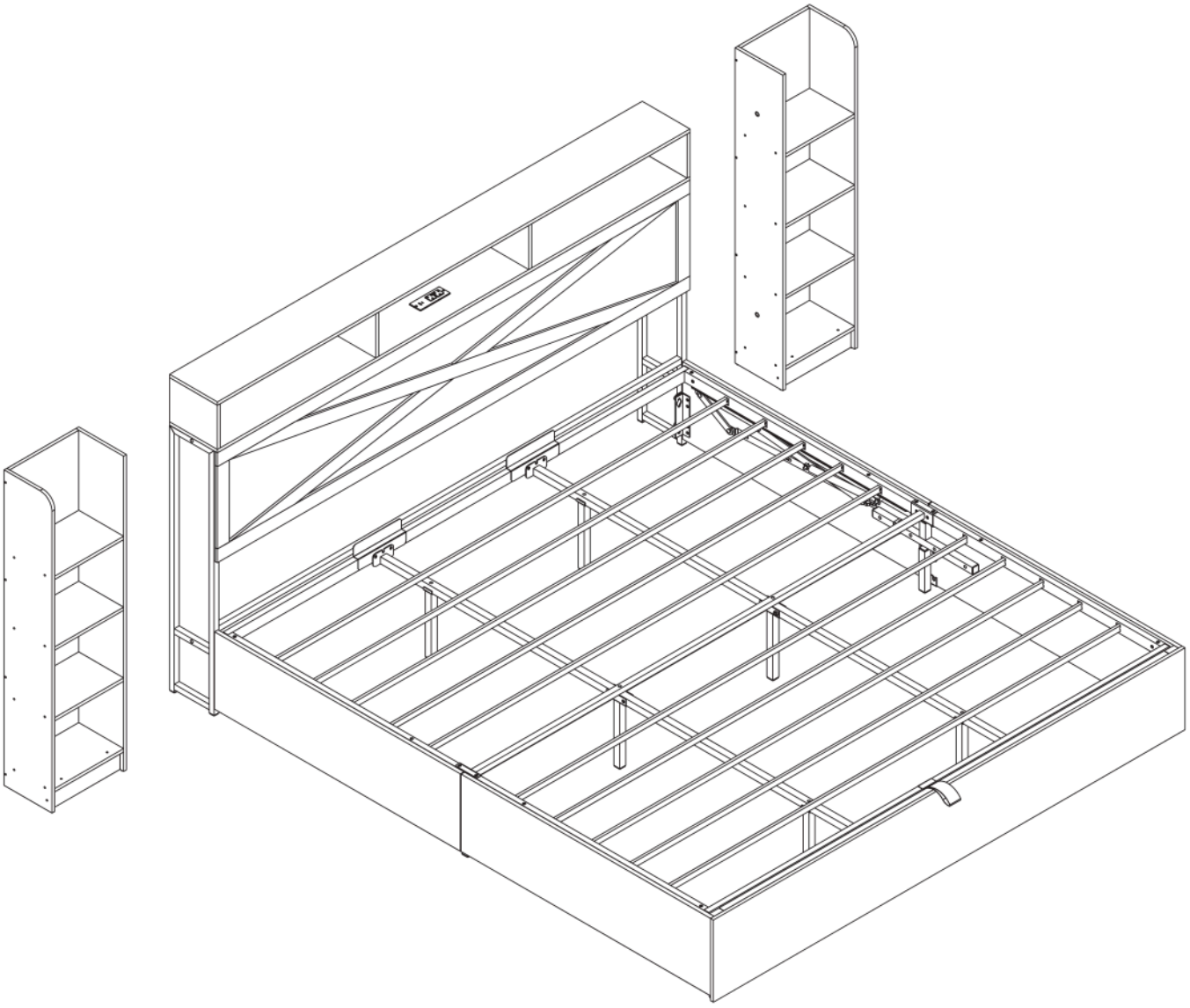



⚠ ·Make sure the assembly holes are aligned.
·TIGHTEN ALL THE SCREWS COMPLETELY.



Installation Complete

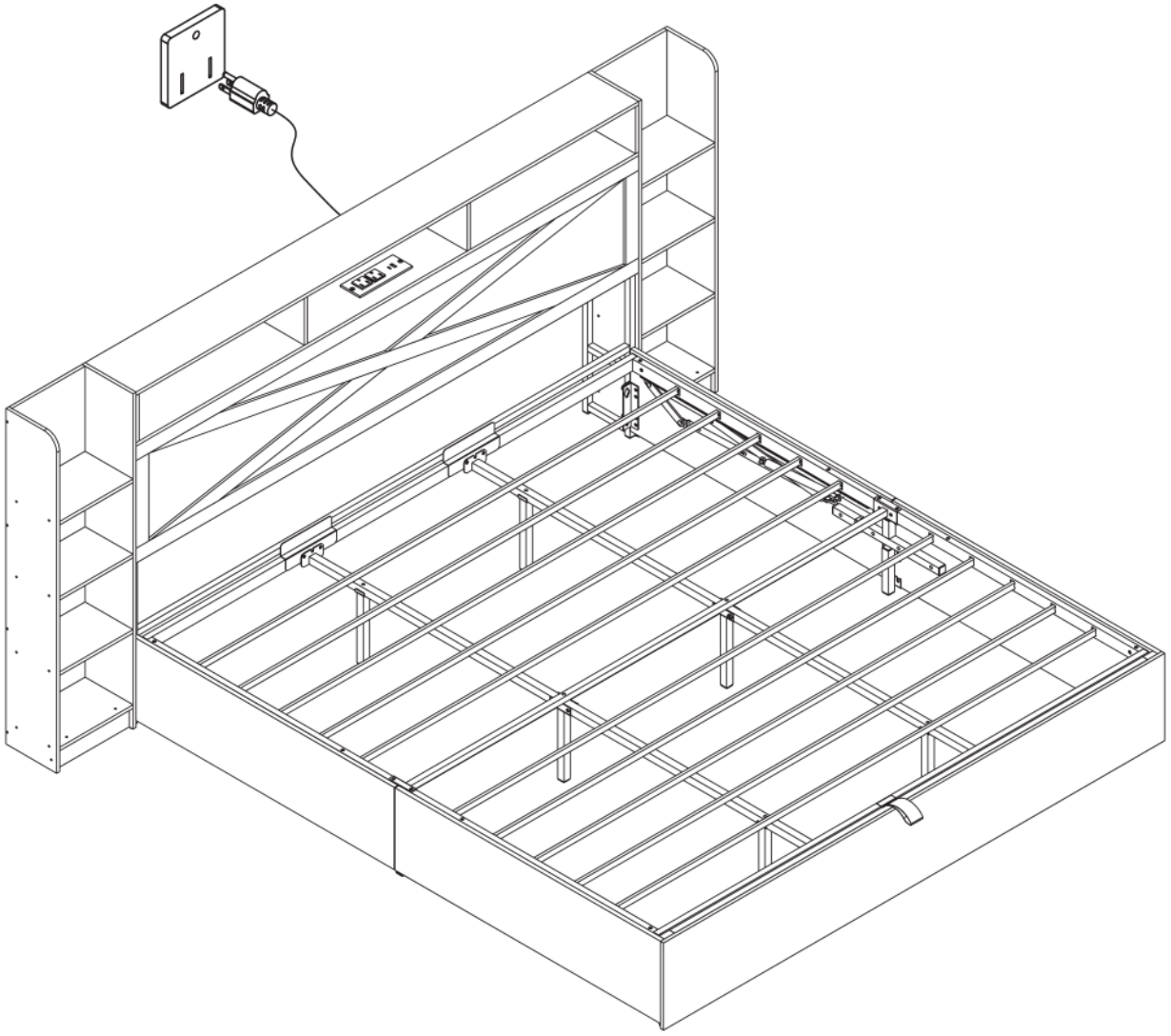



⚠ ·Make sure the assembly holes are aligned.
·TIGHTEN ALL THE SCREWS COMPLETELY.



Installation Complete