CHAIR

Product ID. 7LZU5

Scan for Support
support@garvee.com



Distributed by
GARVEE.com

V2606278TLU

Ax2



Bx2



Cx1

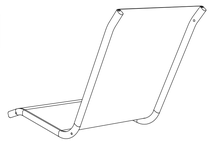

Dx1

Ex16



Fx8



Gx4

M6×55

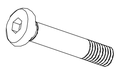

Hx4

M6×75

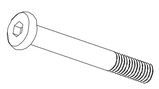

Jx1



Kx1



Lx1



Mx2

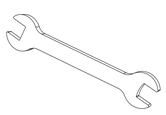

1

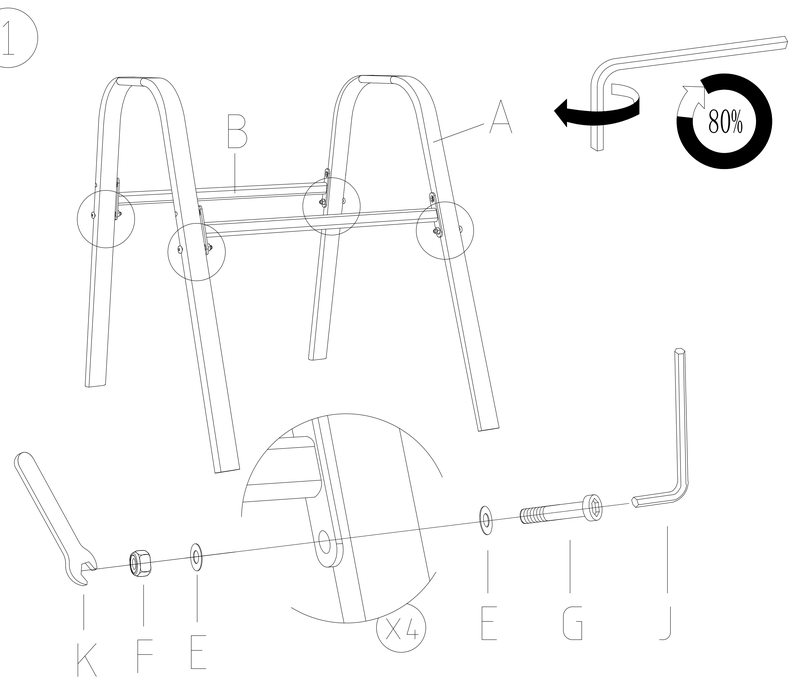

Note: Do not fully tighten all screws until all components are properly aligned during installation.

2

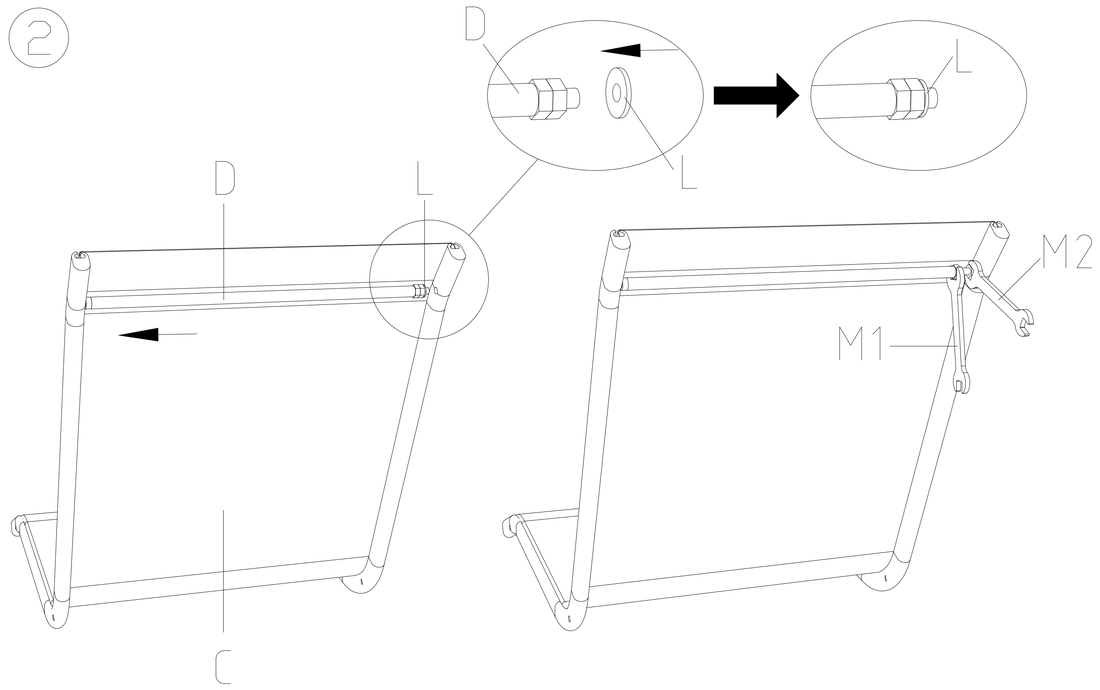

Note: Do not fully tighten all screws until all components are properly aligned during installation.

3

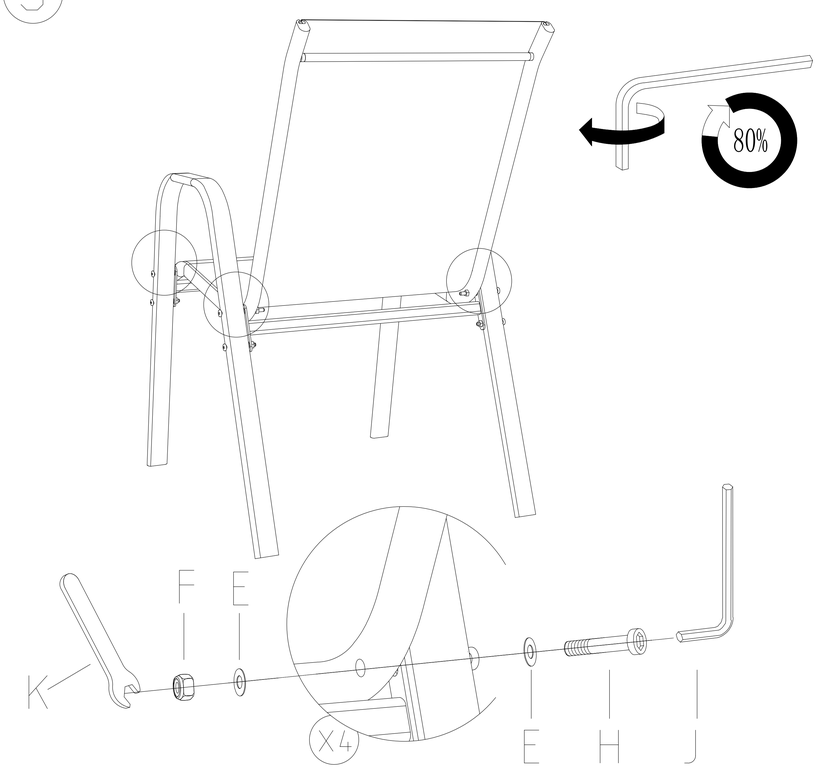

Note: Do not fully tighten all screws until all components are properly aligned during installation.

4

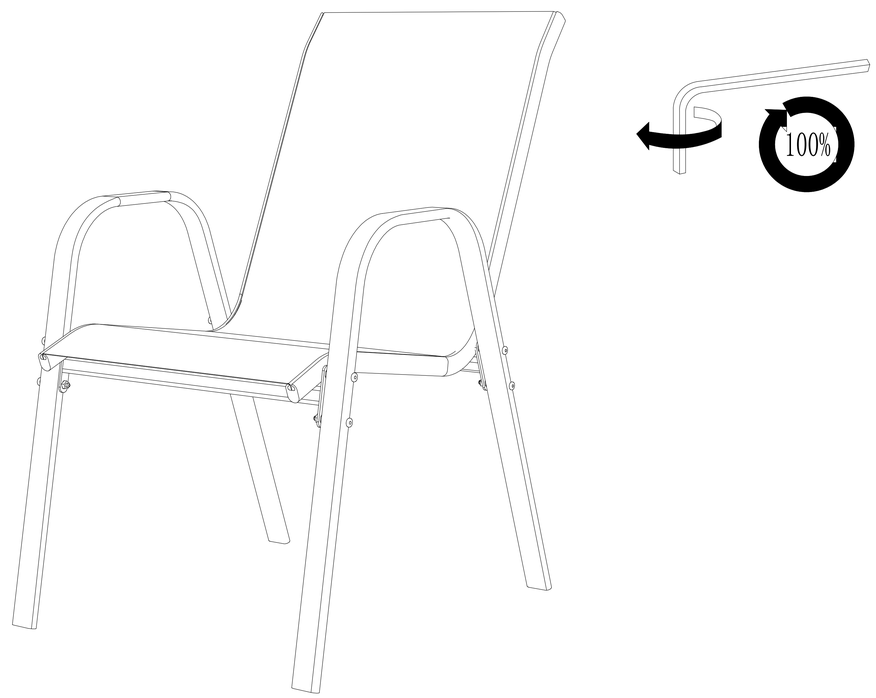

Note: After 80% tighten the screw, please place the entire chair on a flat ground. Then, keep the chair in a horizontal position to ensure the 4 legs on the ground ,then 100% fully tighten all screws.

GARVEE

support@garvee.com