Cabinet

Assembly Instruction - Please keep properly for future reference.

If you find any missing boxes, damaged parts, or accessory shortages, please contact the customer service team of your purchasing channel immediately. We will resolve the issue as quickly as possible.

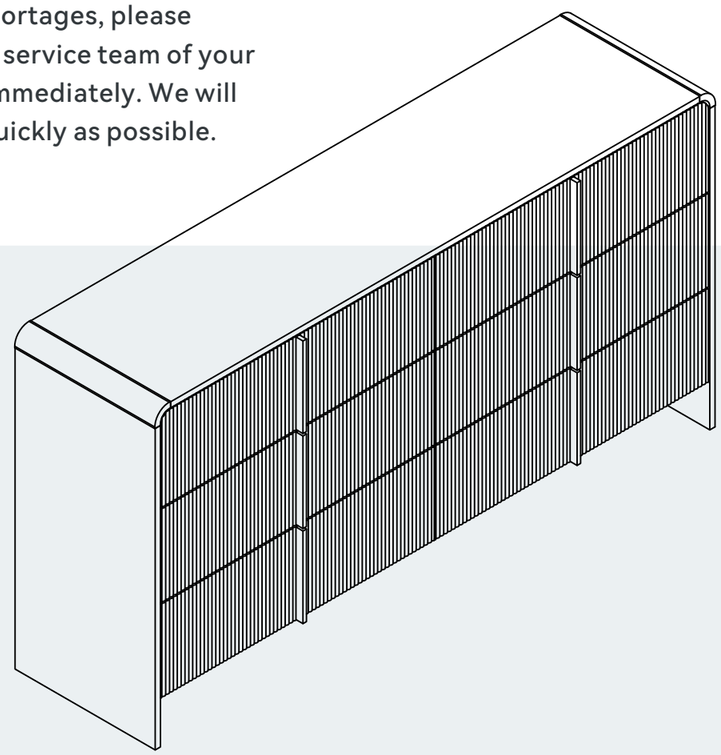

CONTACT US

- **Email: service@grandtunnel.com**
  In order to receive assistance more quickly, please provide

THE FOLLOWING INFORMATION:

- Order number
- Purchase platform
- Purchase date
- Detailed description of the issue along with photos (if applicable)

Important – Please read these instructions carefully before starting the installation.

SKU
BF19ML-1F3A0
BF19ML-1F3B0
BF19ML-1F3C0

V1.0

EN

Cabinet

Before Assembly

Thank you for choosing our product!
To ensure a smooth installation process, please read this guide carefully to familiarize yourself with the required tools, materials, and installation steps.
Follow the relevant sections to avoid any damage caused by improper installation, and make sure to review all operation and safety guidelines for correct installation procedures.

Packaging Notice:

If you find any missing boxes, damaged parts, or accessory shortages, please contact the customer service team of your purchasing channel immediately. We will resolve the issue as quickly as possible.

Safety and Care Advice

Important :
Please read these instructions fully before starting assembly.

- Check you have all the components and tools listed on the following pages.
- Remove all fittings from the plastic bags and separate them into their groups.
- Keep children and animals away from the work area, small parts could choke if swallowed.
- Make sure you have enough space to layout the parts before starting.
- During assembly do not stand or put weight on the product, this could cause damage.
- Assemble the item as close to its final position (in the same room) as possible.
- Assemble on a soft level surface to avoid damaging the unit or your floor.
- Parts of the assembly will be easier with 2 people.

- To reduce the likelihood of damaging your product please ensure that your power drill is set on a low torque setting.

Email : **service@grandtunnel.com**

Care and Maintenance

- Only clean using a damp cloth and mild detergent, do not use bleach or abrasive cleaners.
- From time to time check that there are no loose screws on this unit.
- This product should not be discarded with household waste. Take to your local authority waste disposal center.

Handy Hints

- Assemble all parts and bolts loosely during assembly, only once the product is complete should you fully tighten the bolts.
- Regularly check and ensure that all bolts and fittings are tightened properly.

Warning

In order to help prevent overturning, please follow these instructions.

- Use the anti tip strap or wall fixing method provided (if applicable).
- Do not allow children to climb or hang on the furniture.
- Do not open more than one drawer at a time.
- Do not place heavy items in the top drawers.
- Do not place heavy items on top of the furniture, unless the furniture has been designed for this purpose.
- Please note that only the anti tip strap is provided. You will need to provide wall plugs and screws applicable for your wall type.

Email : **service@grandtunnel.com**

Customer Service Guide

Thank you for choosing our product! We are committed to providing you with excellent service. If you find any missing parts, damaged packaging, or product damage after receiving all packages, please follow the steps below to quickly contact our customer service team. We will do our best to resolve your issue.

1. Missing Parts

Verify Parts:

1. Refer to the “Parts List” in the manual to verify the name, specifications, and quantity of the missing parts.
2. Take a clear photo of the parts list and mark the missing parts with detailed information, e.g., “Missing 5 pieces of M6×30mm screws.”

Contact Us:

By Email:

Send an email to **service@grandtunnel.com**, with the subject line “Missing Parts Issue.” Include the following in the email:

- A description of the missing parts and a photo of the parts list.
- Order details (order number, purchase platform, purchase date).

2. Product or Packaging Damage

If it affects normal use:

Steps:

1. Take clear photos or videos showing the damaged parts and the extent of the damage (multi-angle shots are recommended).
2. Email the photos/videos along with order details to **service@grandtunnel.com**, with the subject line “Product Damage Issue.”

Resolution:

After verification, we will arrange for a replacement part, product exchange, or refund as quickly as possible.

If it does not affect normal use:

Steps:

1. Contact our customer service team (by email: **service@grandtunnel.com**).
2. Provide a description of the damage and include relevant photos or videos.

Resolution:

We will provide repair guidance or an appropriate compensation plan based on the specific situation.

Contact Us:

Customer Service Email: **service@grandtunnel.com**

Helpful Tips

To process your issue efficiently, please prepare the following information:

- Order details (order number, purchase platform, purchase date).
- Clear photos or videos.
- We are committed to providing quick and professional solutions, no matter the size of the issue, to ensure your satisfaction.

Thank you for your trust and support!
We hope you enjoy using our product!

EN

Parts List - Panels

Please check you have all the panels listed below.

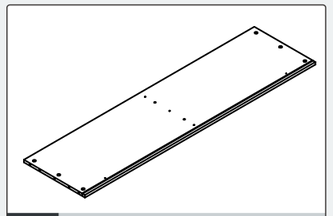

1 1510*400*15mm **x1**

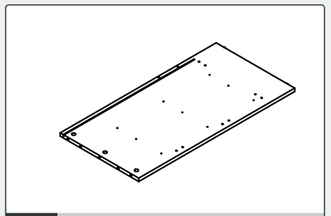

2 795*400*15mm **x1**

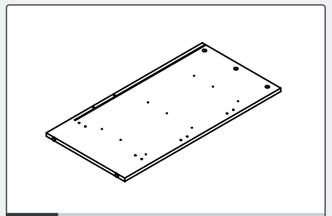

3 795*400*15mm **x1**

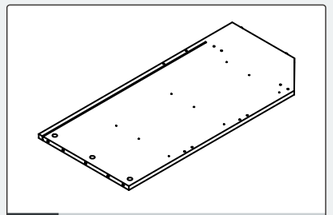

4 824*384*15mm **x1**

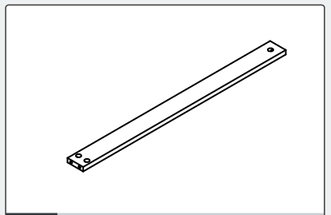

5 776.5*60*15mm **x2**

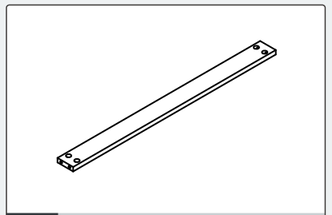

6 776.5*60*15mm **x2**

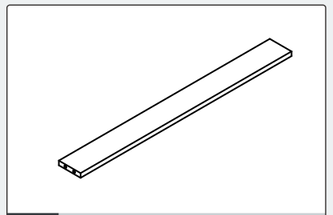

7 776.5*80*15mm **x1**

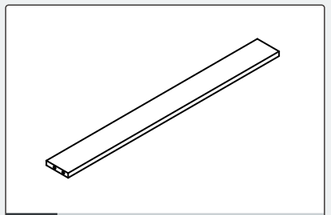

8 776.5*80*15mm **x1**

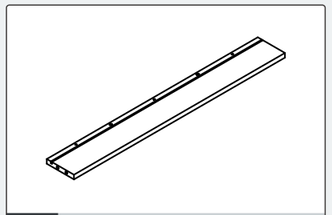

9 776.5*100*15mm **x1**

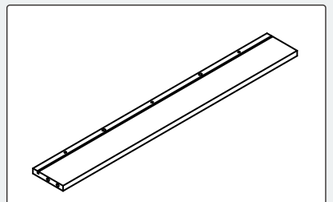

10 776.5*100*15mm **x1**

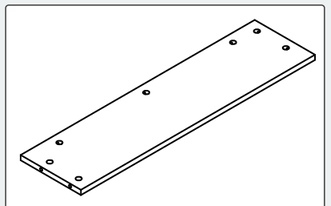

11 776.5*200*15mm **x2**

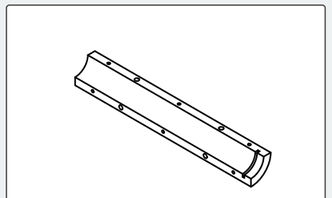

12 400*64*27mm **x2**

Email : **service@grandtunnel.com**

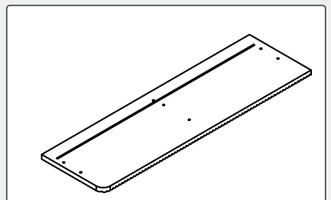

13 779.5*231*15mm **x1**

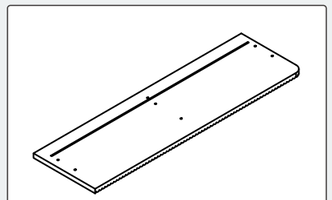

14 779.5*231*15mm **x1**

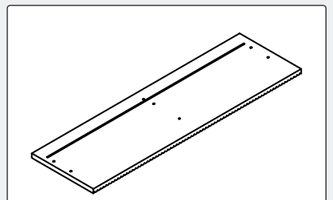

15 779.5*231*15mm **x2**

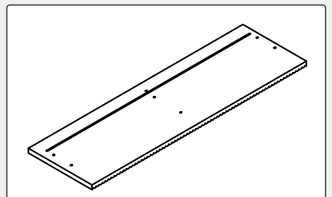

16 779.5*231*15mm **x2**

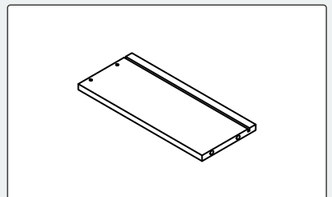

17 300*130*12mm **x6**

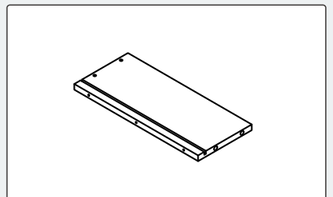

18 300*130*12mm **x6**

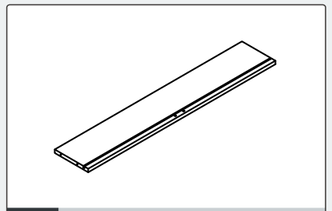

19 727.5*130*12mm **x6**

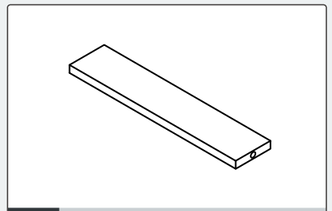

20 287*60*12mm **x6**

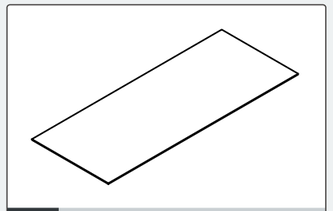

21 737.5*297*3mm **x6**

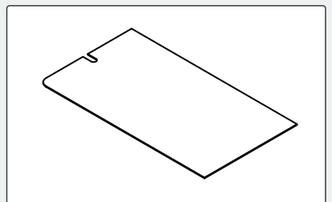

22 699*391*3mm **x2**

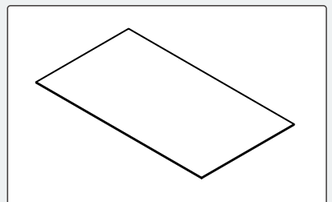

23 699*391*3mm **x2**

EN

Email : **service@grandtunnel.com**

EN

Parts List - Fittings

Please check you have all the fittings listed below.

Note: The quantities below are the correct amount to complete the assembly. In some cases more fittings may be supplied are required.

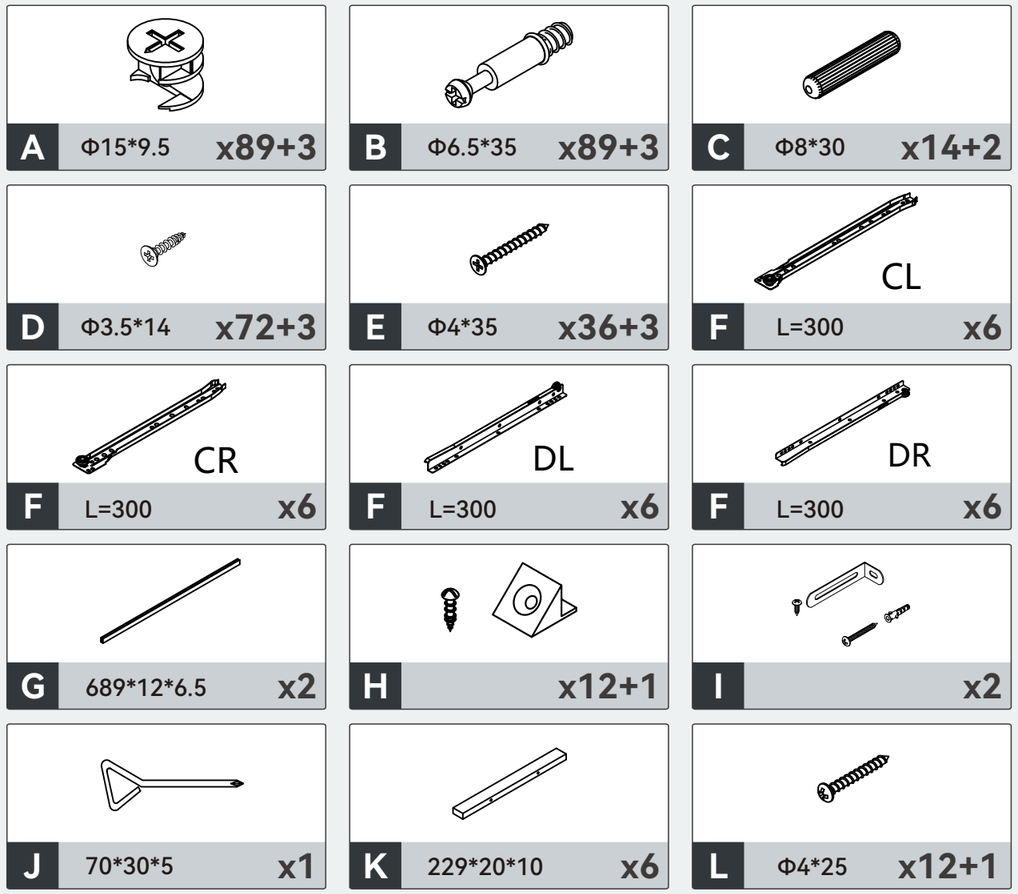

Cam Lock Fastening System

Insert the cam bolt into the hole first, then insert the cam lock and lock it.

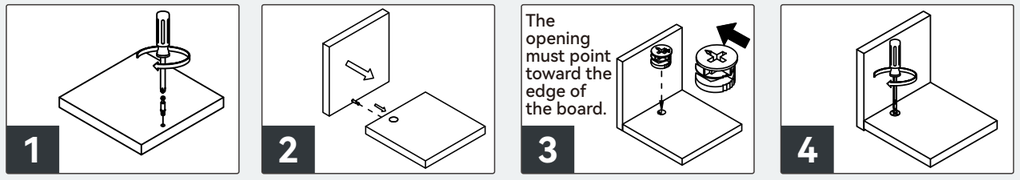

Email : **service@grandtunnel.com**

Assembly Instructions

EN

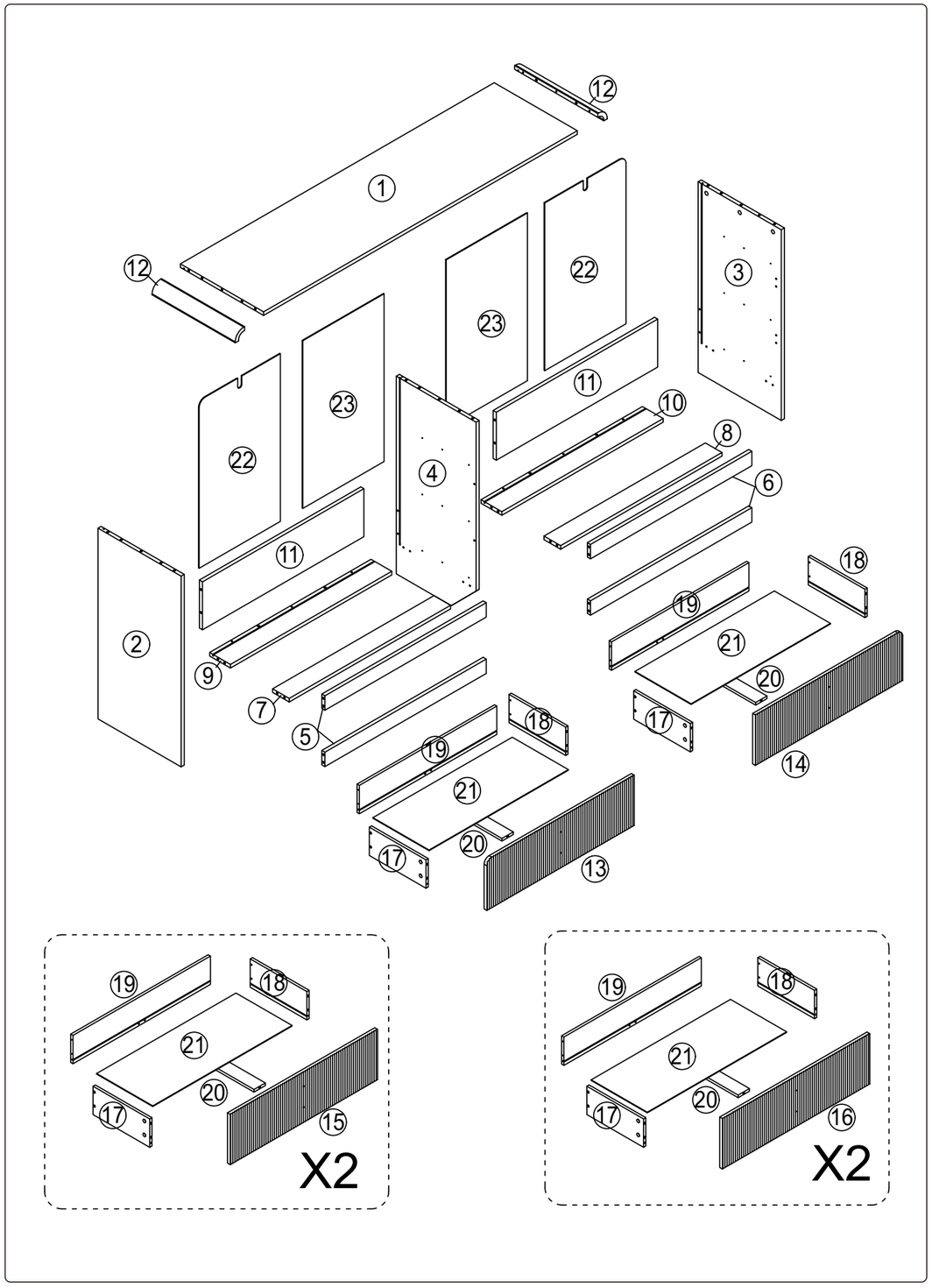

Email : **service@grandtunnel.com**

EN

Step 1

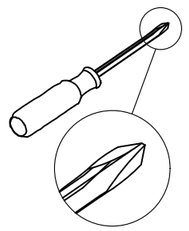

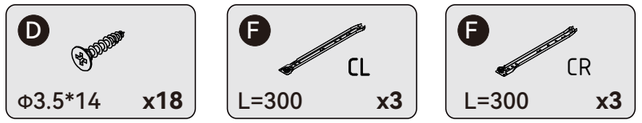

As shown in the figure, attach accessory F to boards 2 and 3, and secure it with screw D.

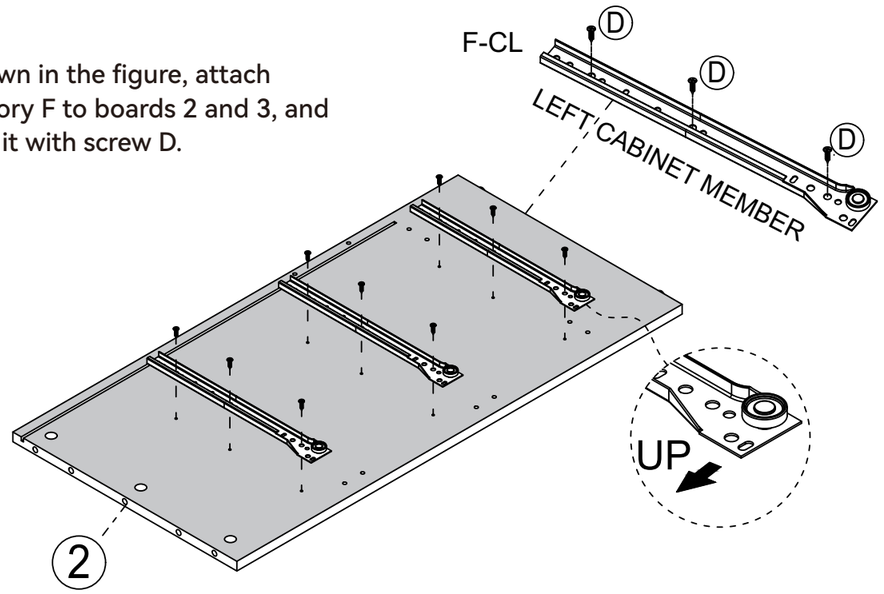

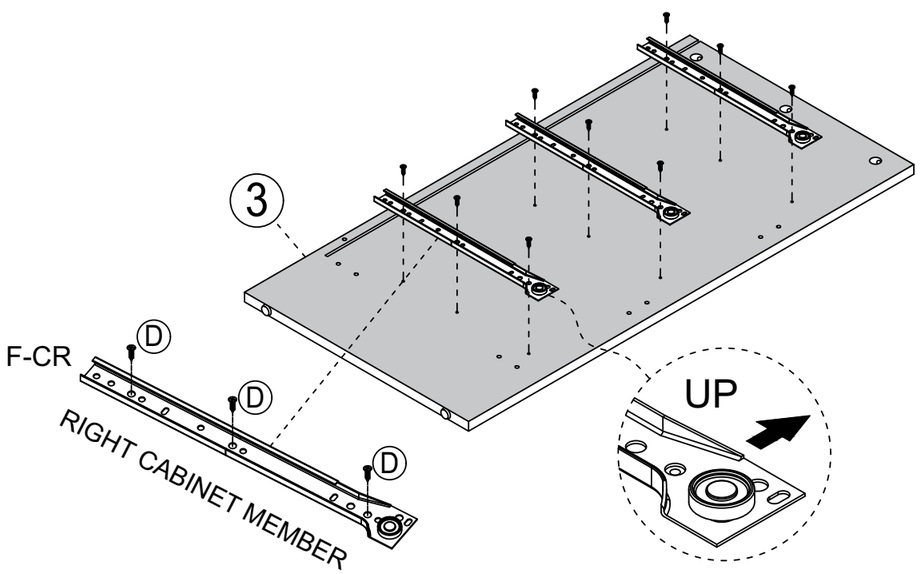

Email : **service@grandtunnel.com**

Step 2

EN

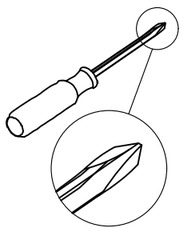

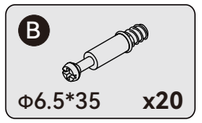

Attach accessory B to boards 2 and 3.

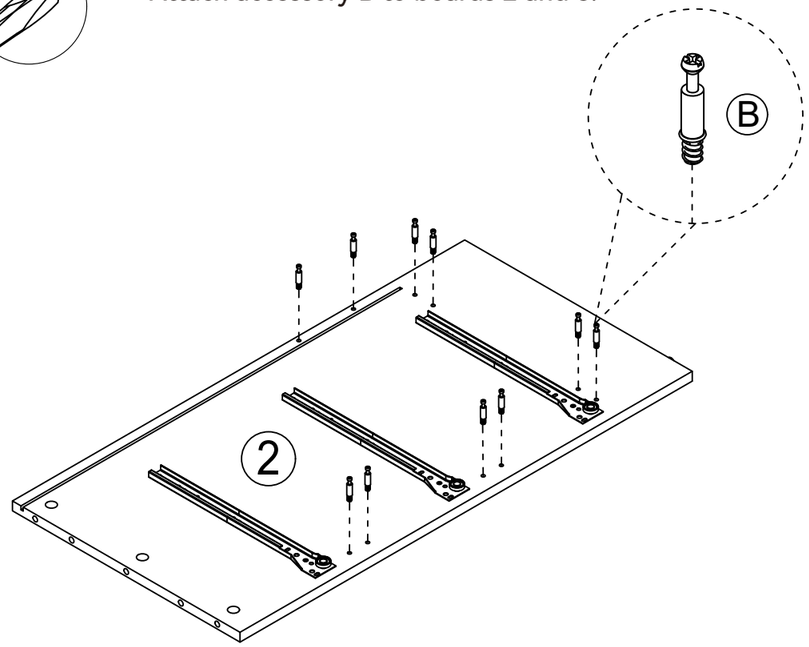

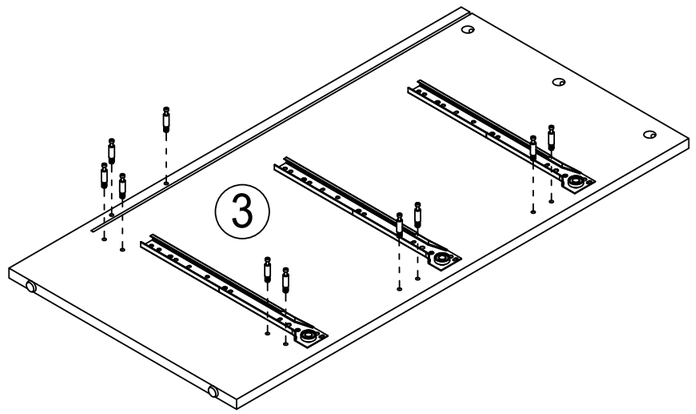

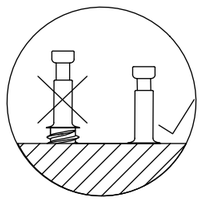

Email : **service@grandtunnel.com**

EN

Step 3

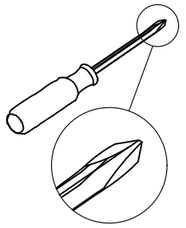

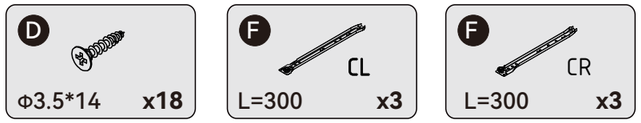

As shown in the figure, use screw D to attach accessory F to board 4.

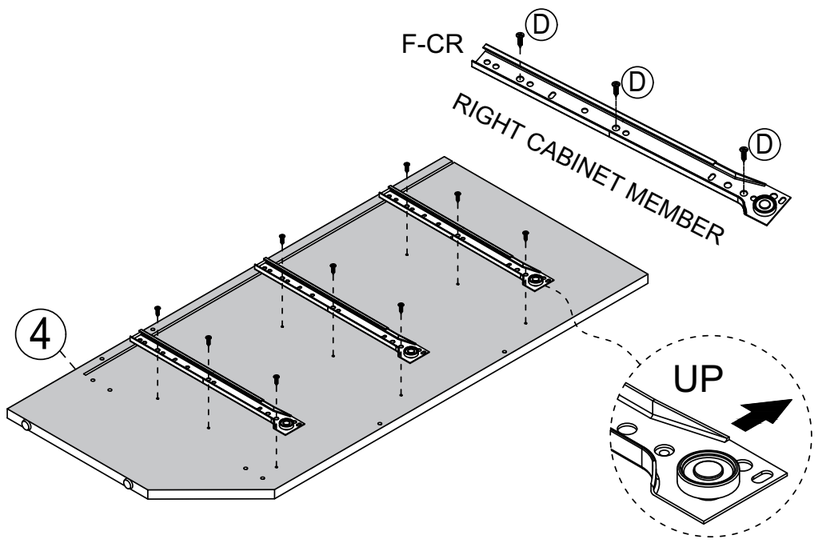

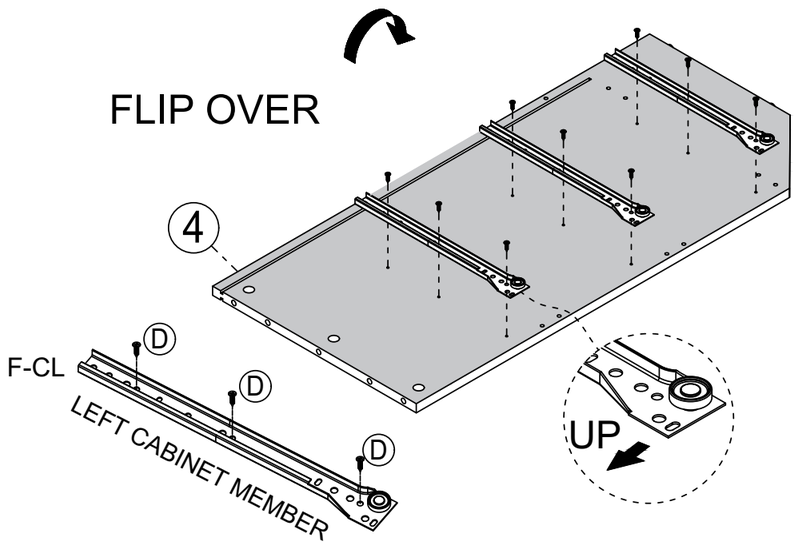

Email : **service@grandtunnel.com**

Step 4

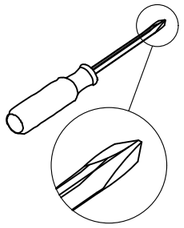

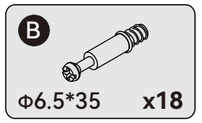

Install screw B on both sides of board 4.

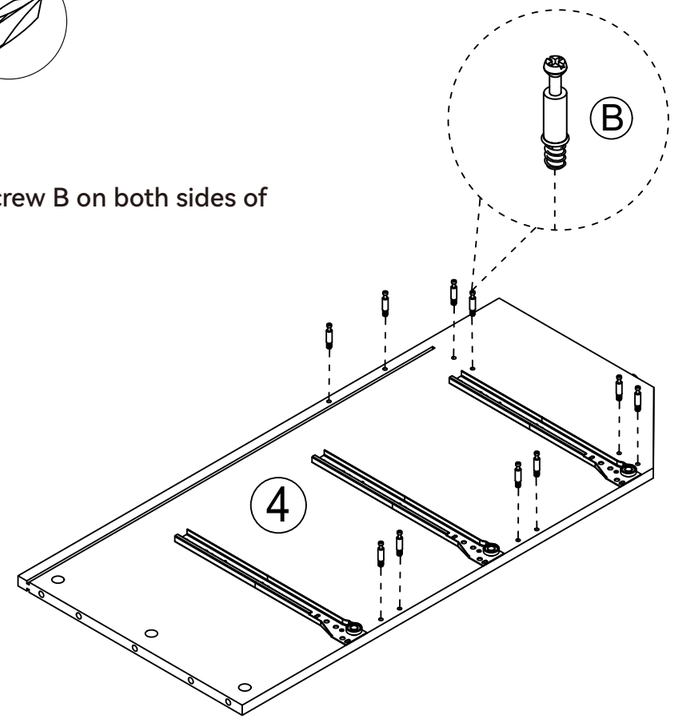

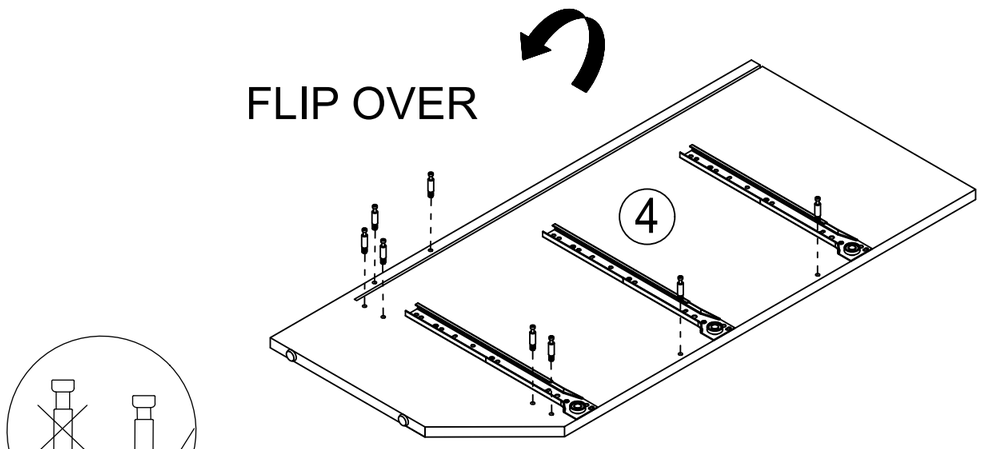

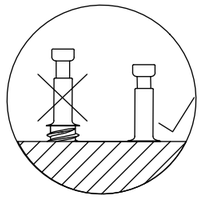

EN

Email : **service@grandtunnel.com**

EN

Step 5

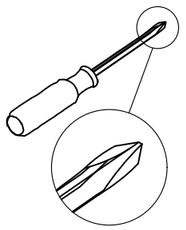

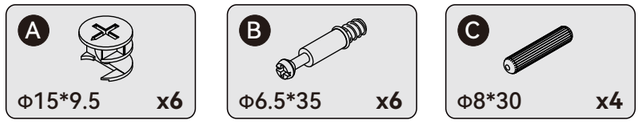

Secure screw B to boards 9 and 10.

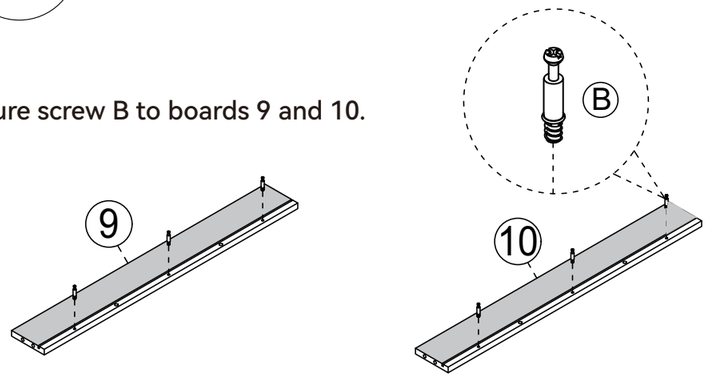

Align board 11 with the corresponding holes on boards 9 and 10, then, as shown in the figure, rotate accessory A clockwise to secure it, connecting boards 9 and 10.

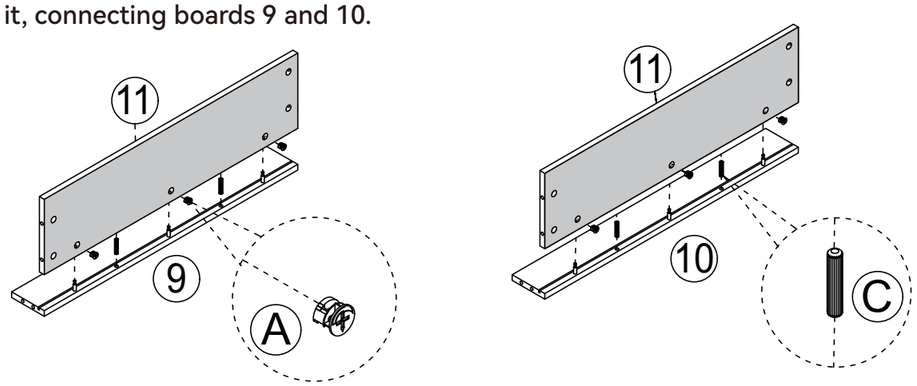

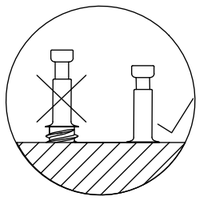

Insert the cam bolt into the hole first, then insert the cam lock and lock it.

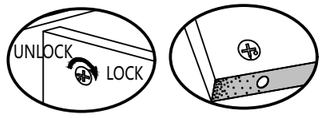

Proper orientation of CAM LOCK

Email : **service@grandtunnel.com**

Step 6

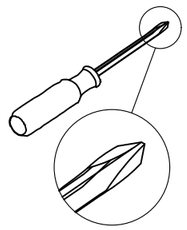

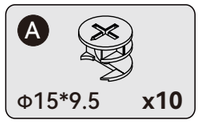

Align boards 5, 7, 9, and 11 with the corresponding holes on board 2, then, as shown in the figure, rotate accessory A clockwise to secure it to board 2.

Note that the upper end of the No.7 plate is not centered, and the lower end hole is in the center, and the center hole is installed here.

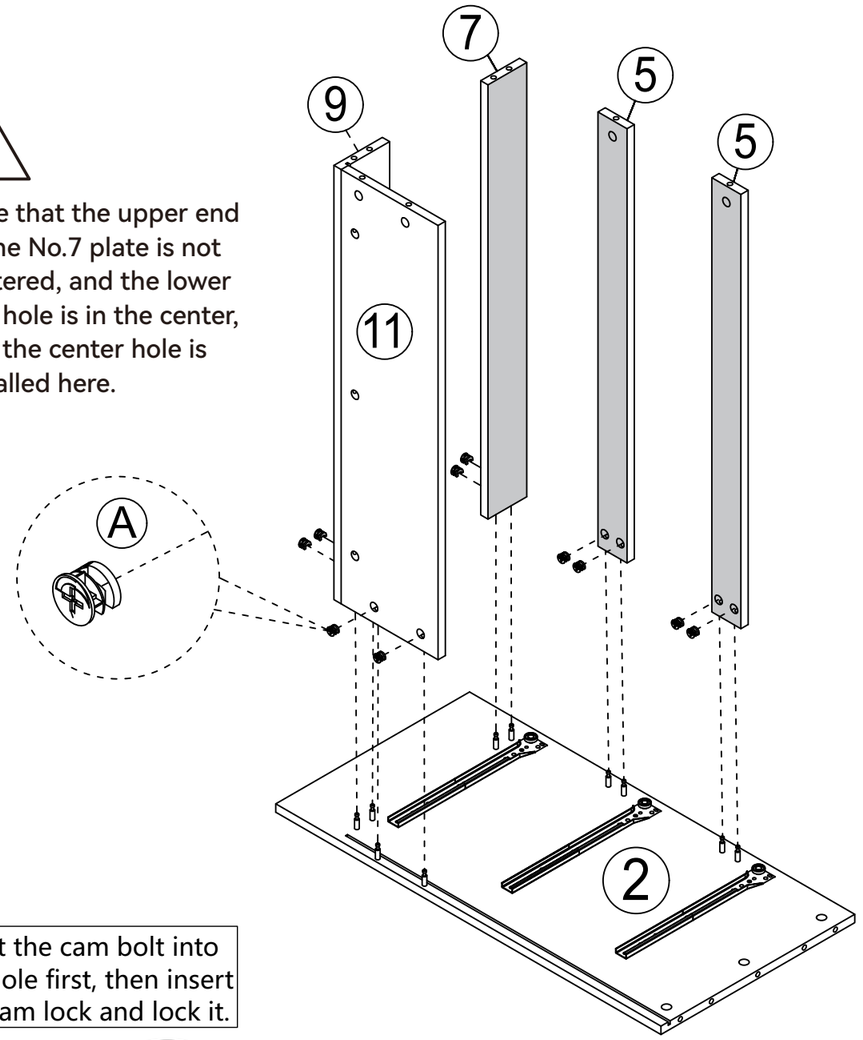

Insert the cam bolt into the hole first, then insert the cam lock and lock it.

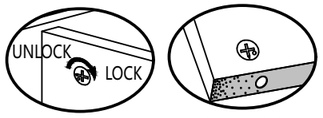

Proper orientation of CAM LOCK

Email : **service@grandtunnel.com**

EN

EN

Step 7

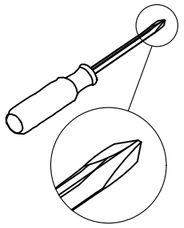

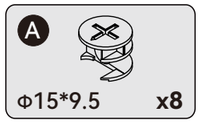

Note:
When installing this step, you need a helper.

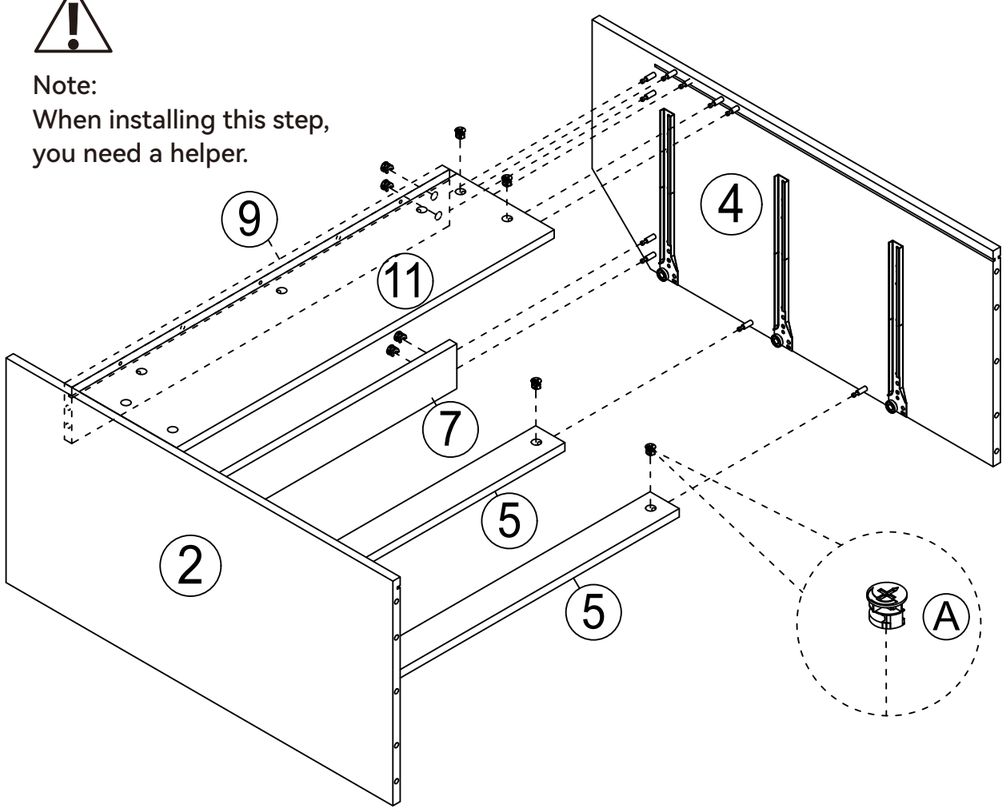

Align boards 2, 5, 7, 9, and 11 with the corresponding holes on board 4, then, as shown in the figure, rotate accessory A clockwise to secure it to board 4.

Insert the cam bolt into the hole first, then insert the cam lock and lock it.

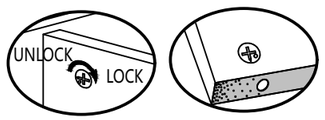

Proper orientation of CAM LOCK

Email : **service@grandtunnel.com**

Step 8

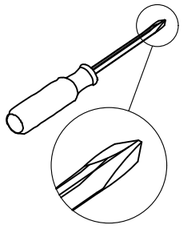

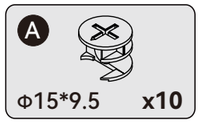

Align boards 6, 8, 10, and 11 with the corresponding holes on board 3, then, as shown in the figure, rotate accessory A clockwise to secure it to board 3.

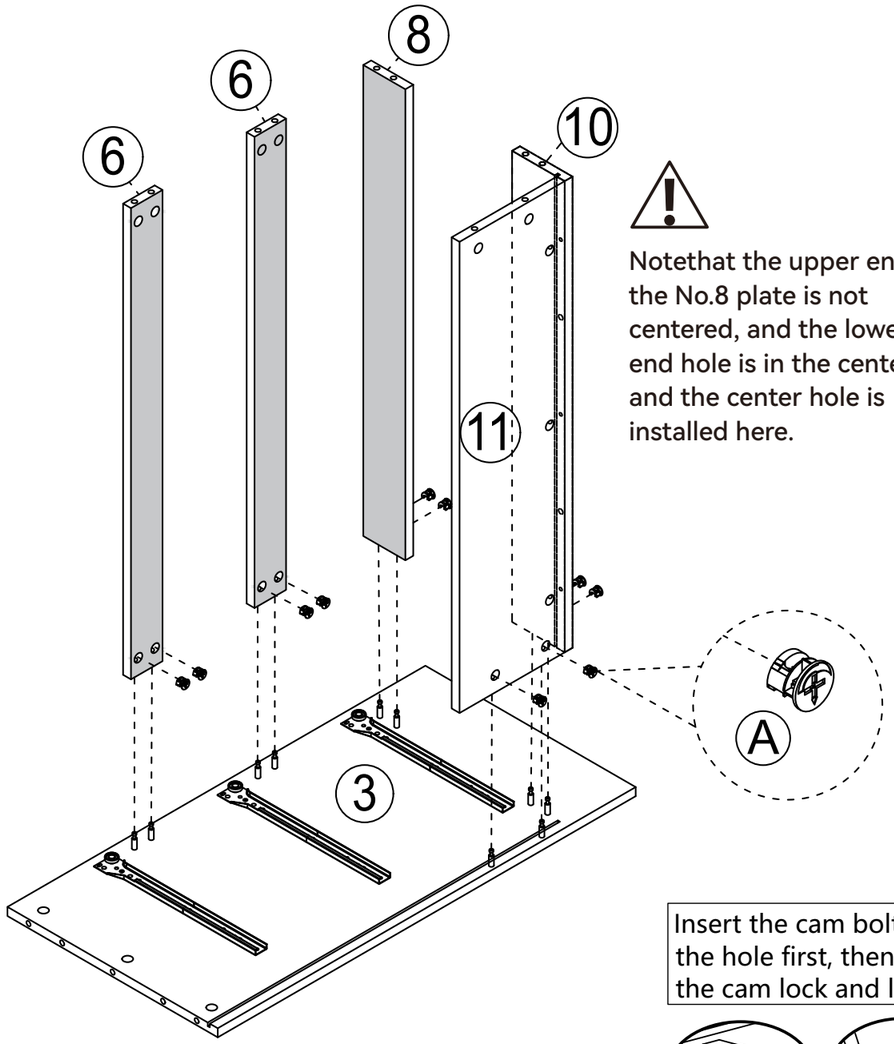

Notethat the upper end of the No.8 plate is not centered, and the lower end hole is in the center, and the center hole is installed here.

Insert the cam bolt into the hole first, then insert the cam lock and lock it.

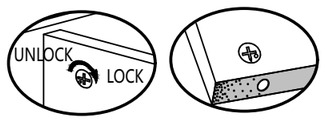

Proper orientation of CAM LOCK

Email : **service@grandtunnel.com**

EN

EN

Step 9

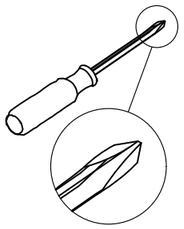

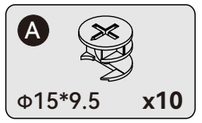

Align boards 6, 8, 10, and 11 with the corresponding holes on board 4, then, as shown in the figure, rotate accessory A clockwise to secure it to board 4.

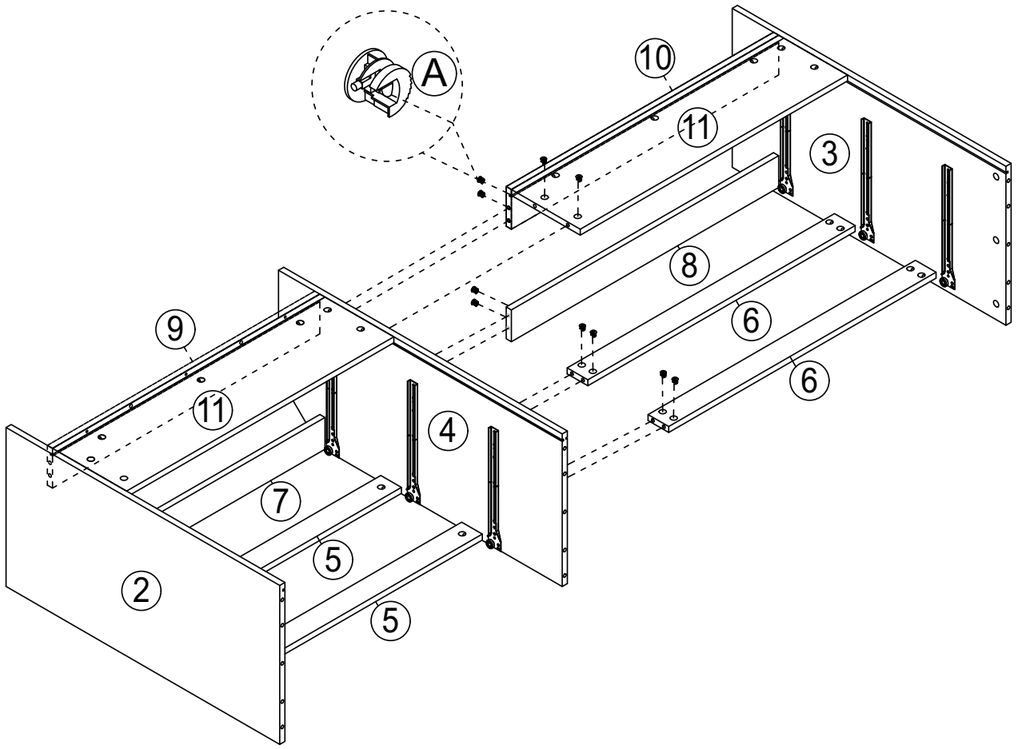

Note:
When installing this step, you need a helper.

Insert the cam bolt into the hole first, then insert the cam lock and lock it.

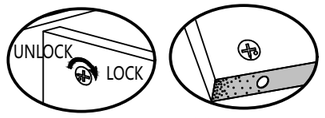

Proper orientation of CAM LOCK

Email : **service@grandtunnel.com**

Step 10

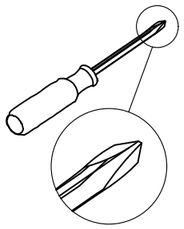

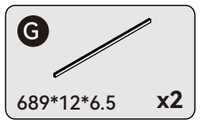

Connect boards 22 and 23 together using accessory G, and insert them into the grooves of boards 2, 3, and 4.

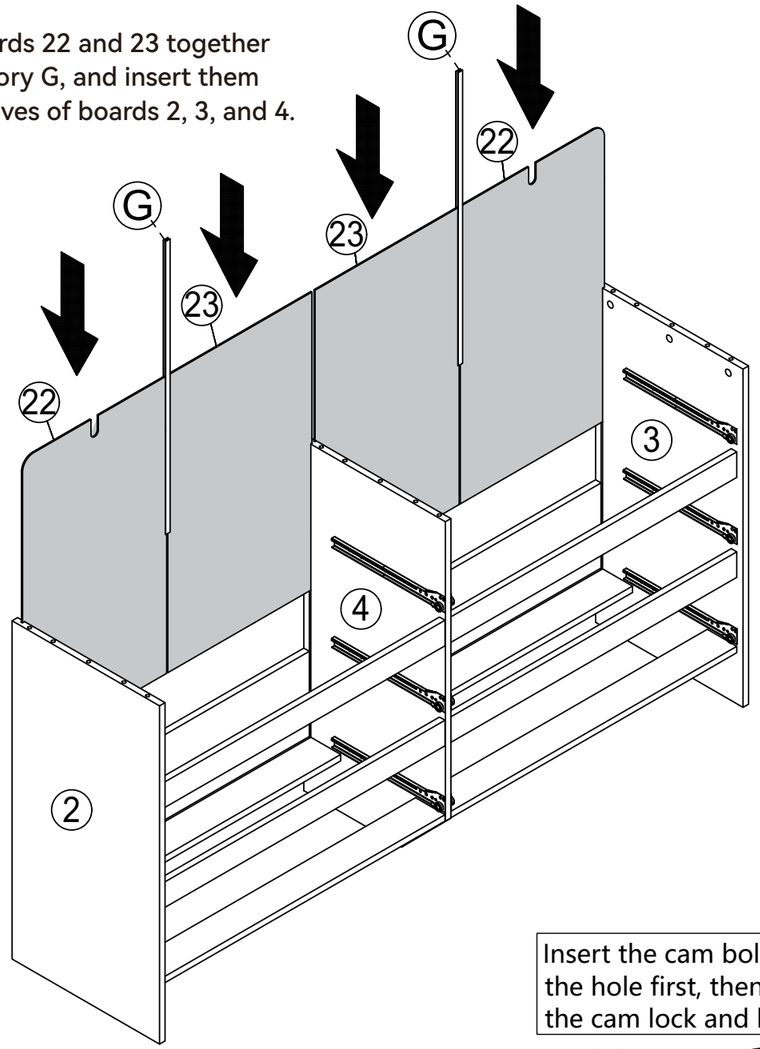

Insert the cam bolt into the hole first, then insert the cam lock and lock it.

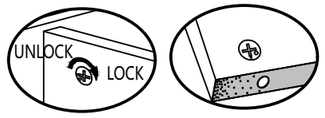

Proper orientation of CAM LOCK

Email : **service@grandtunnel.com**

EN

EN

Step 11

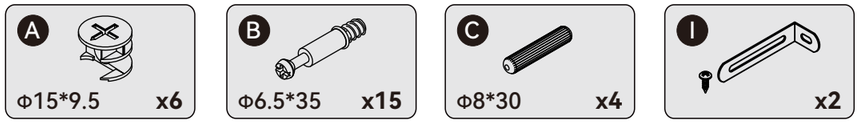

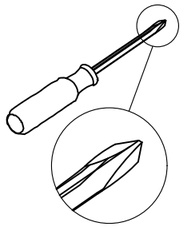

Attach accessory B to board 12.

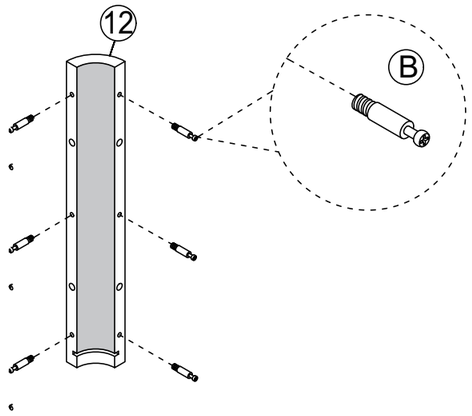

X2

Step 1

As shown in the figure, attach accessories B and I to board 1. Then align board 12 with the corresponding holes on board 1, insert hardware C into board 1, and, as shown in the figure, rotate hardware A clockwise to secure it, aligning it with board 1.

Step 2

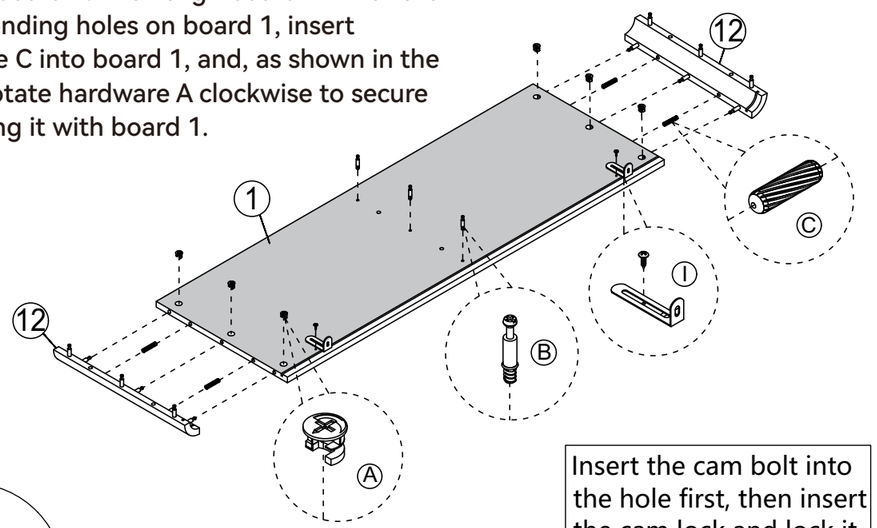

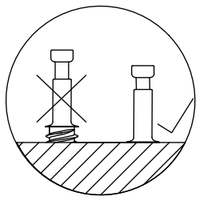

Insert the cam bolt into the hole first, then insert the cam lock and lock it.

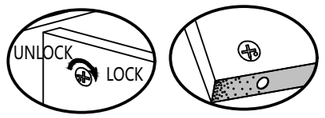

Proper orientation of CAM LOCK

Email : **service@grandtunnel.com**

Step 12

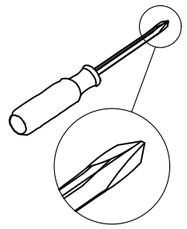

Using accessory C, align the holes of boards 1 and 12 with the corresponding holes on boards 2, 3, and 4, then, as shown in the figure, rotate accessory A clockwise to secure it to boards 2, 3, and 4.

Note that the slot is here.

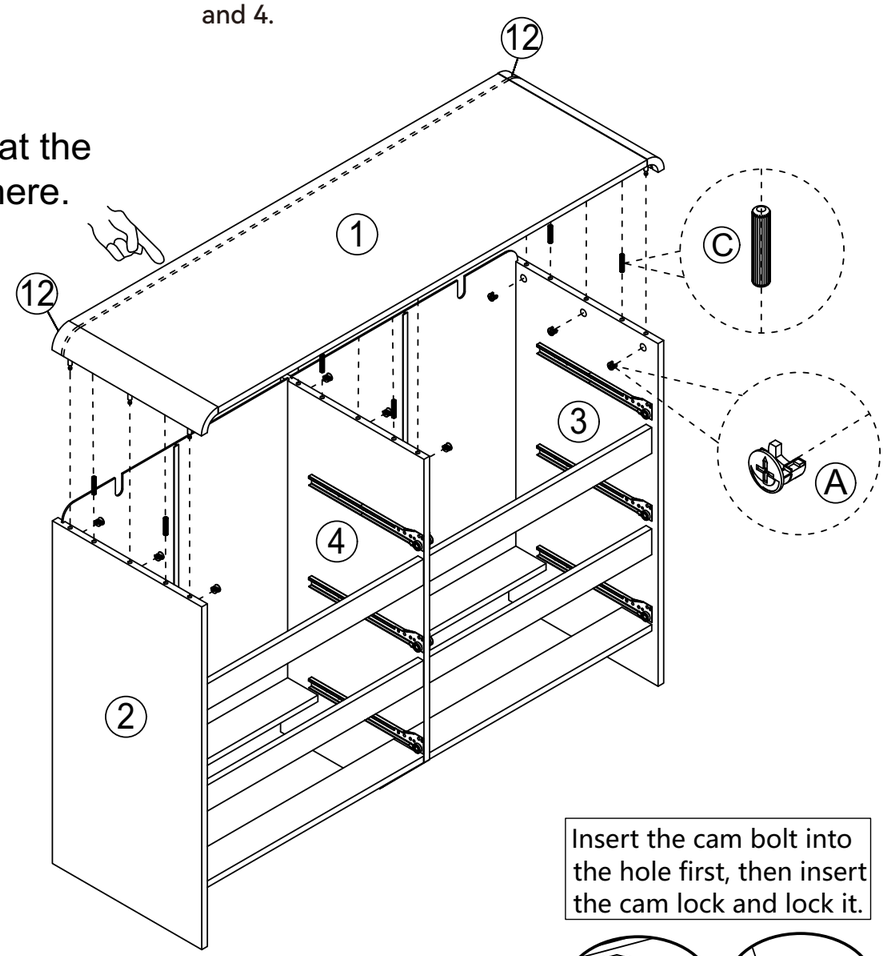

Insert the cam bolt into the hole first, then insert the cam lock and lock it.

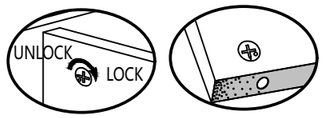

Proper orientation of CAM LOCK

Email : **service@grandtunnel.com**

EN

EN

Step 13

A	B	E	K
Φ15*9.5 x5	Φ6.5*35 x5	Φ4*35 x6	229*10*20 x1

L
Φ4*25 x2

Use screw E to secure boards 17, 18, 19, and 20, then insert board 21 as shown. Connect accessories B, L, and K to board 13, then flip the board over and connect it to boards 17, 18, and 20, securing it with accessory A.

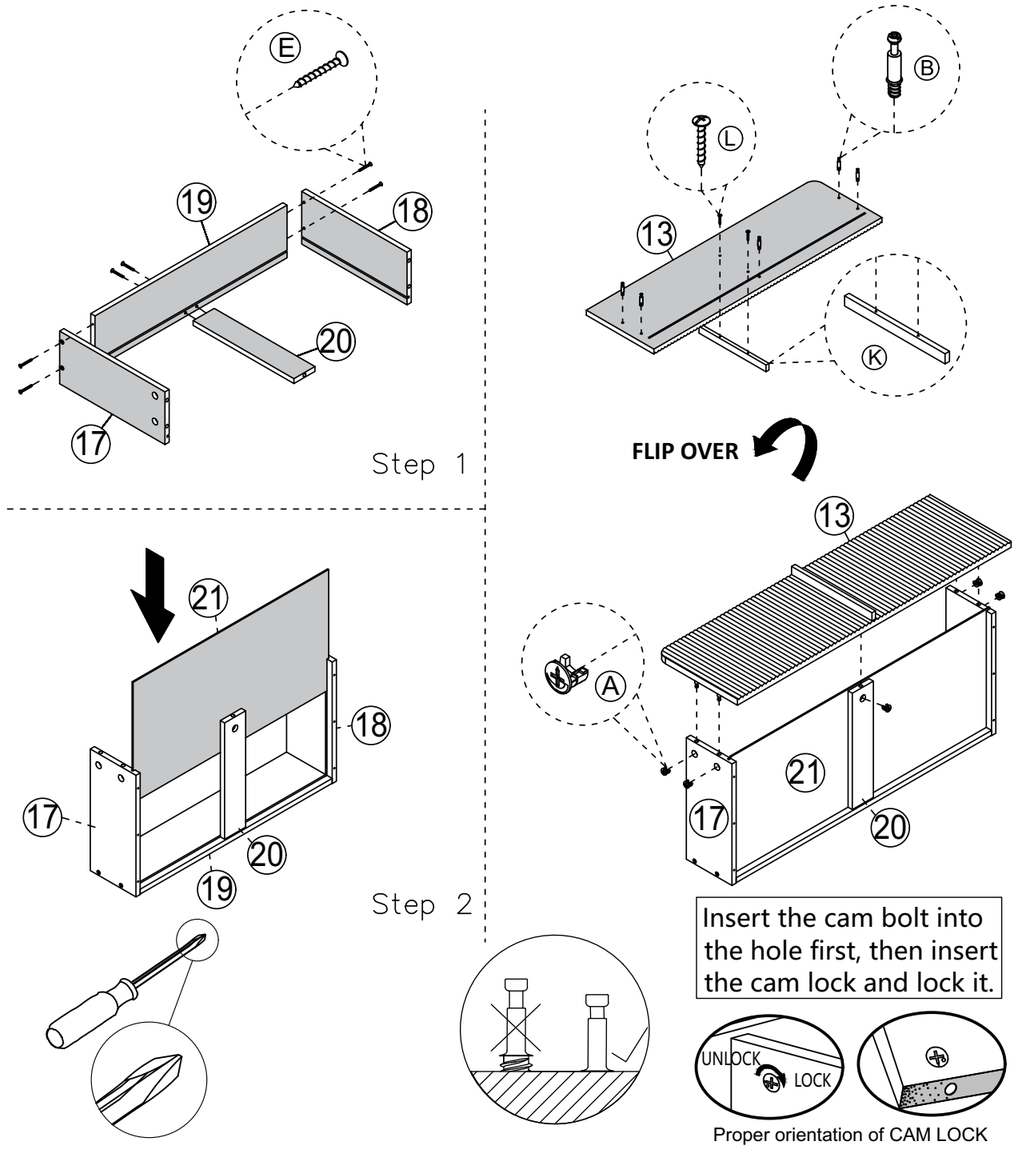

Email : **service@grandtunnel.com**

Step 14

A	B	E	K
Φ15*9.5 x5	Φ6.5*35 x5	Φ4*35 x6	229*10*20 x1

L
Φ4*25 x2

Use screw E to secure boards 17, 18, 19, and 20, then insert board 21 as shown. Fix accessories B, L, and K to board 14, then flip the board over and connect it to boards 17, 18, and 20, securing it with accessory A.

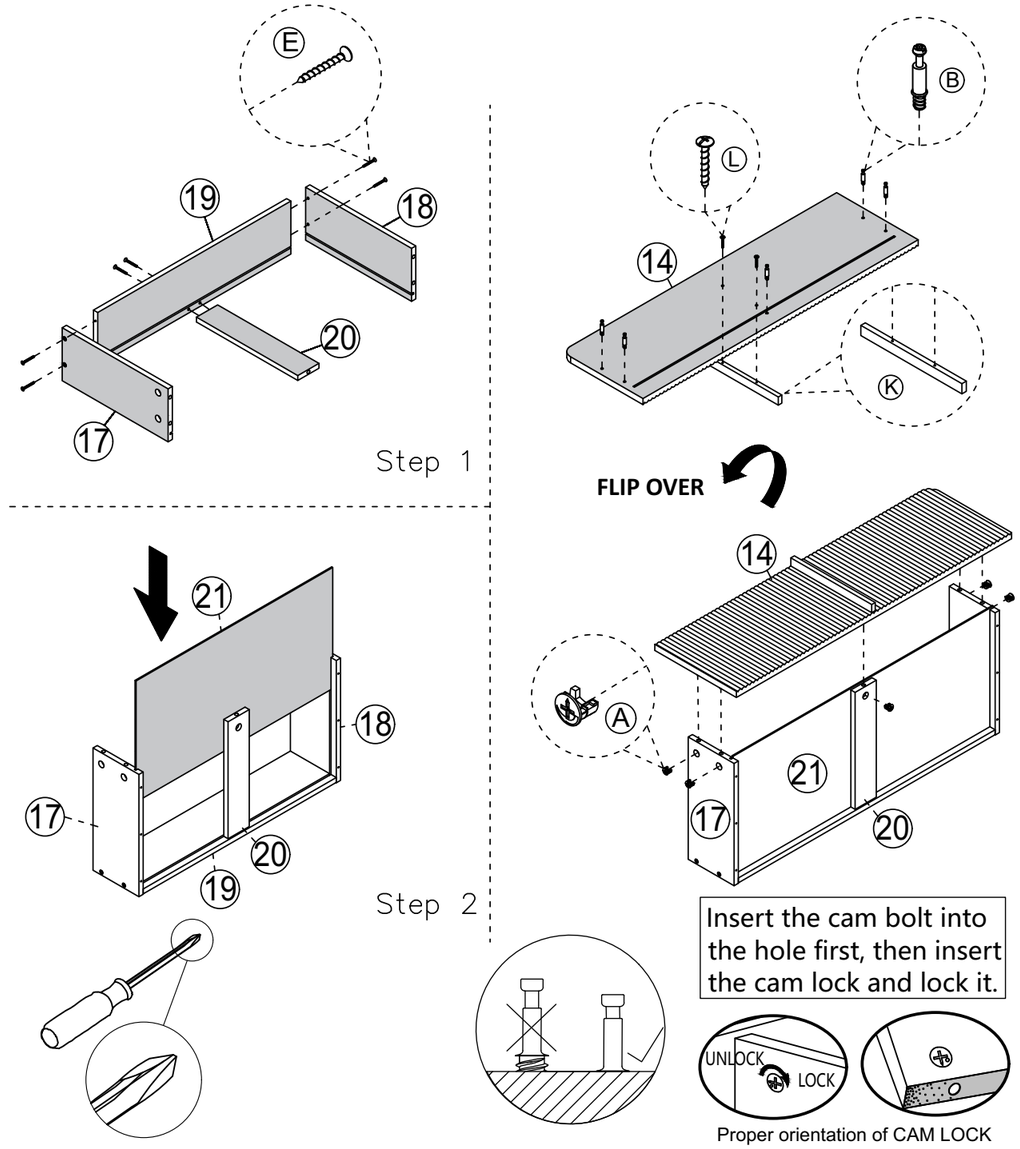

Email : **service@grandtunnel.com**

EN

EN

Step 15

A	B	E	K
Φ15*9.5 x10	Φ6.5*35 x10	Φ4*35 x12	229*10*20 x2

L
Φ4*25 x4

Use screw E to secure boards 17, 18, 19, and 20, then insert board 21 as shown. Fix accessories B, L, and K to board 15, then flip the board over and connect it to boards 17, 18, and 20, securing it with accessory A.

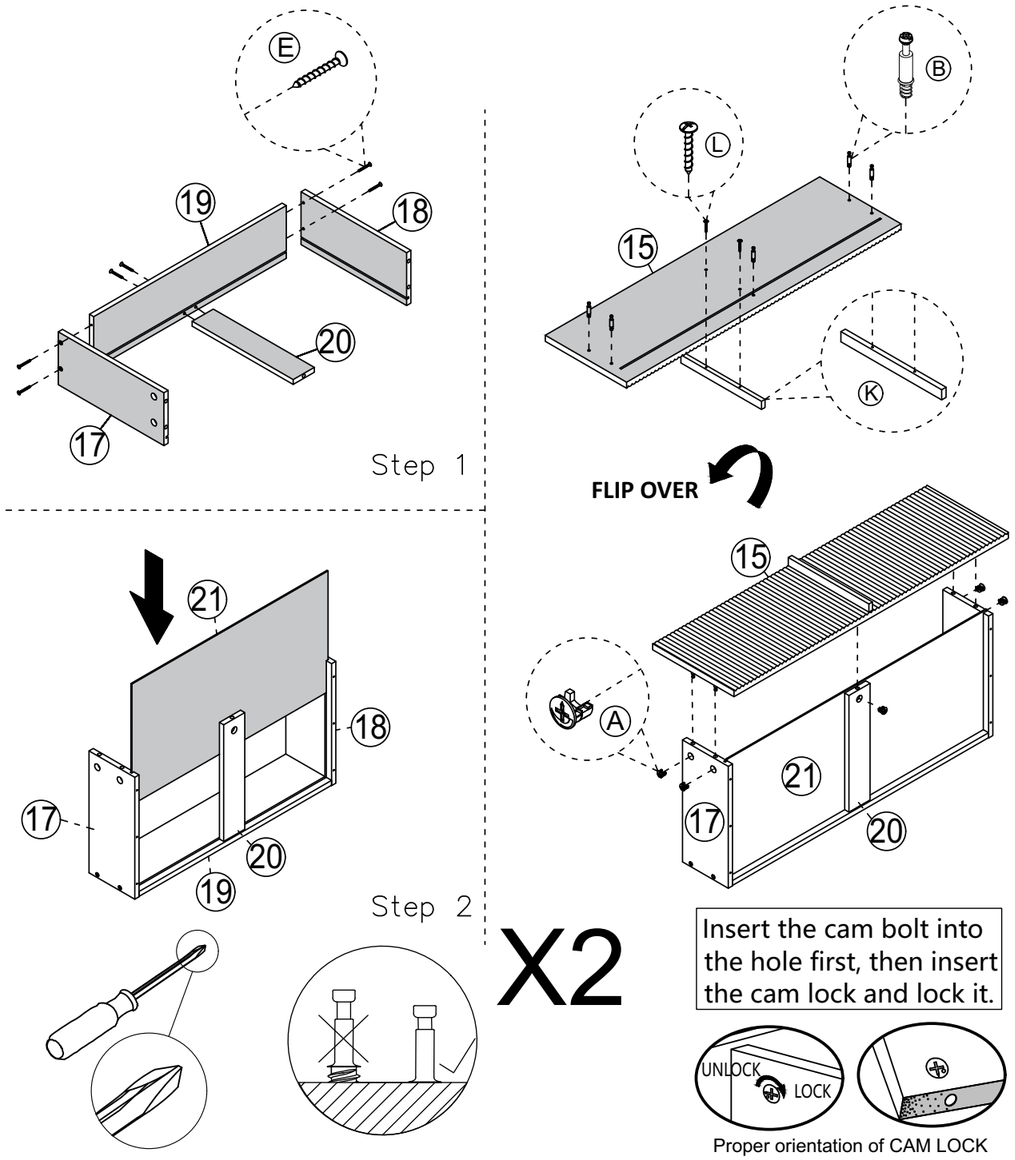

Email : **service@grandtunnel.com**

Step 16

A	B	E	K
Φ15*9.5 x10	Φ6.5*35 x10	Φ4*35 x12	229*10*20 x2

L
Φ4*25 x4

Use screw E to secure boards 17, 18, 19, and 20, then insert board 21 as shown. Fix accessories B, L, and K to board 16, then flip the board over and connect it to boards 17, 18, and 20, securing it with accessory A.

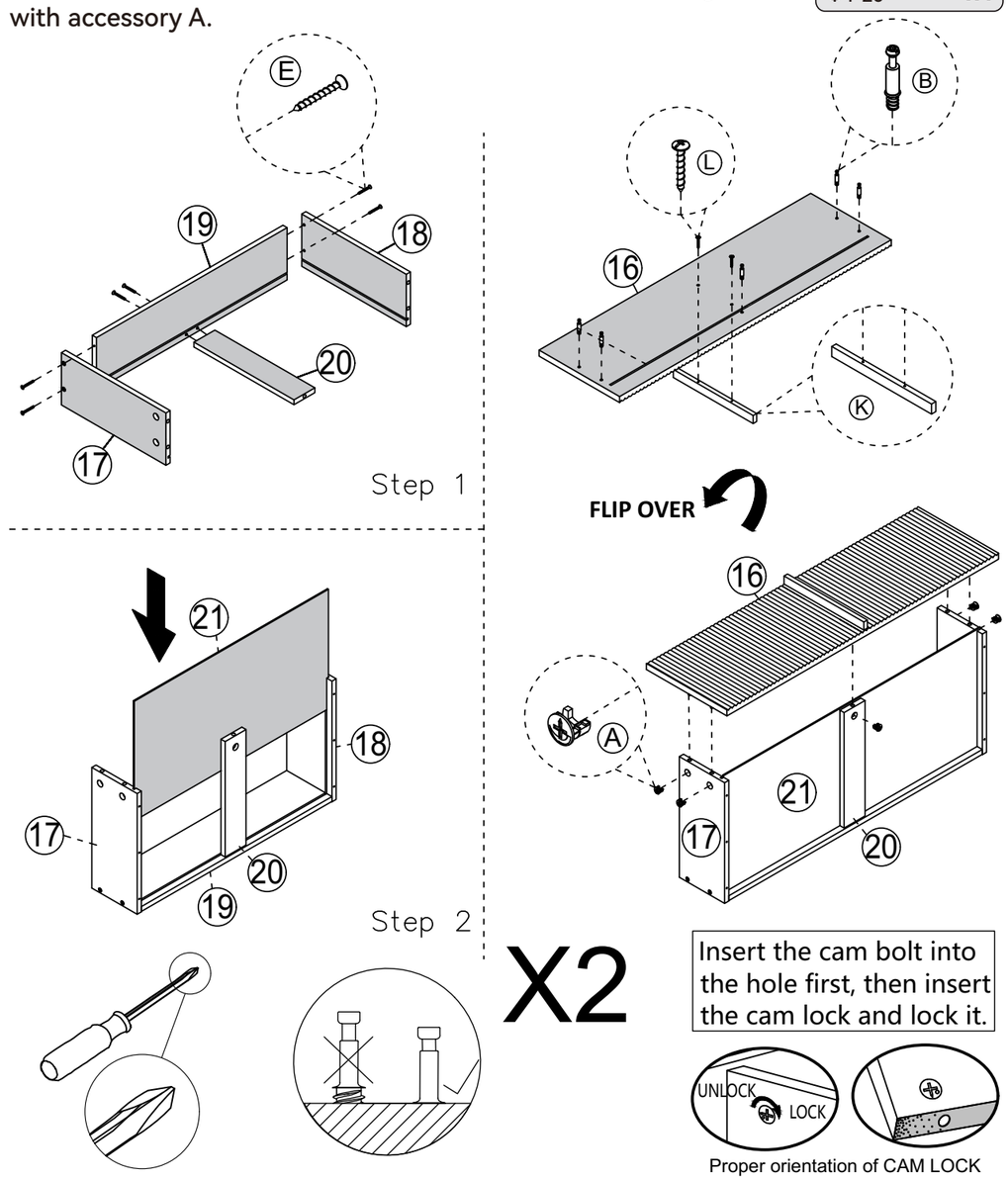

Email : **service@grandtunnel.com**

EN

EN

Step 17

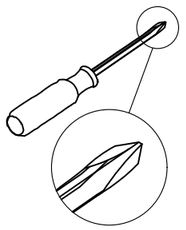

D	F	F
Φ3.5*14 x6	DL L=300 x1	DR L=300 x1

As shown in the figure, screw D is used to secure accessory F to boards 17 and 18.

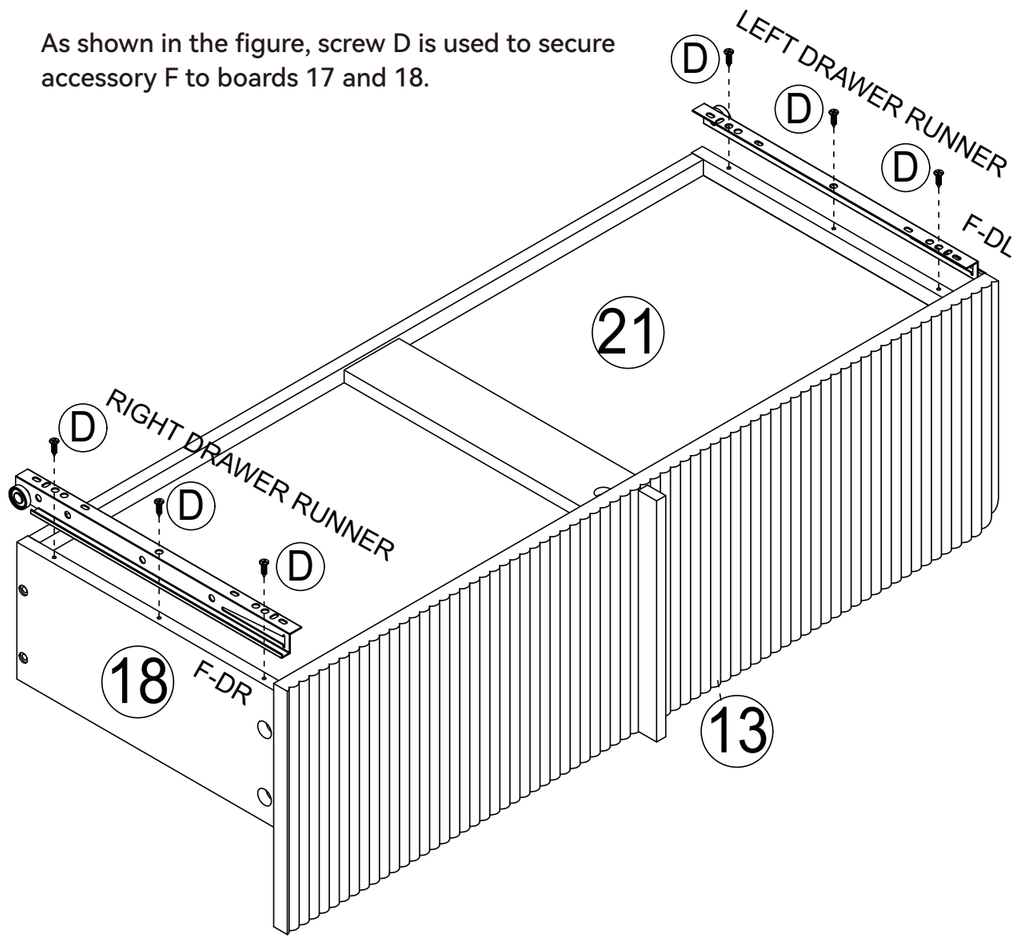

Email : **service@grandtunnel.com**

Step 18

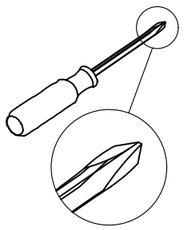

D	F	F
Φ3.5*14 x6	DL L=300 x1	DR L=300 x1

As shown in the figure, screw D is used to secure accessory F to boards 17 and 18.

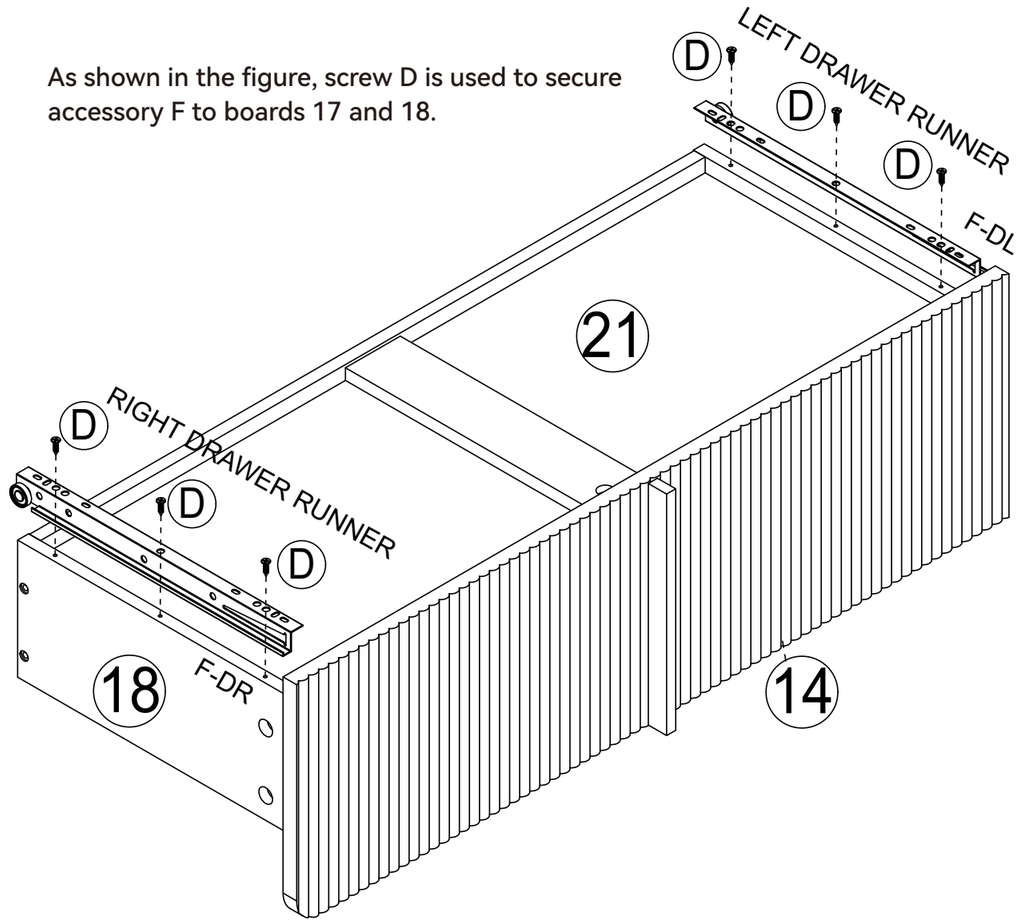

Email : **service@grandtunnel.com**

EN

EN

Step 19

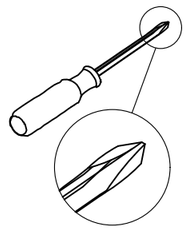

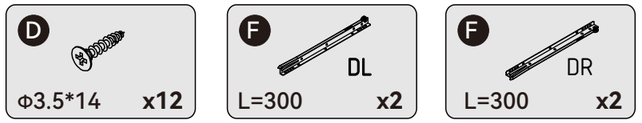

As shown in the figure, screw D is used to secure accessory F to boards 17 and 18.

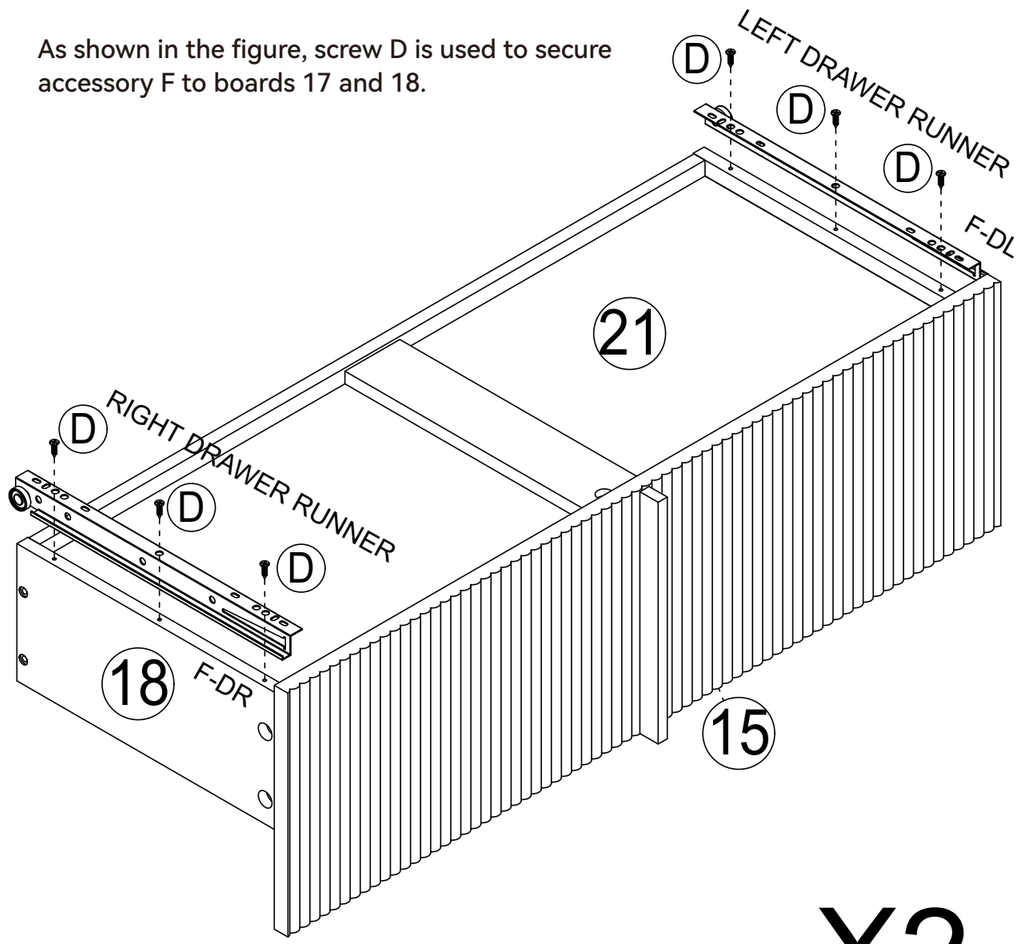

X2

Email : **service@grandtunnel.com**

Step 20

EN

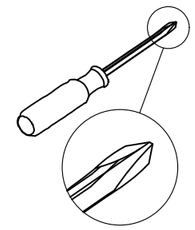

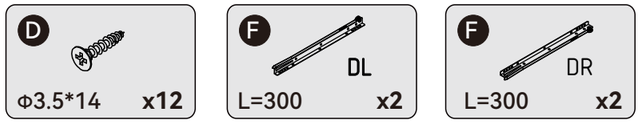

As shown in the figure, screw D is used to secure accessory F to boards 17 and 18.

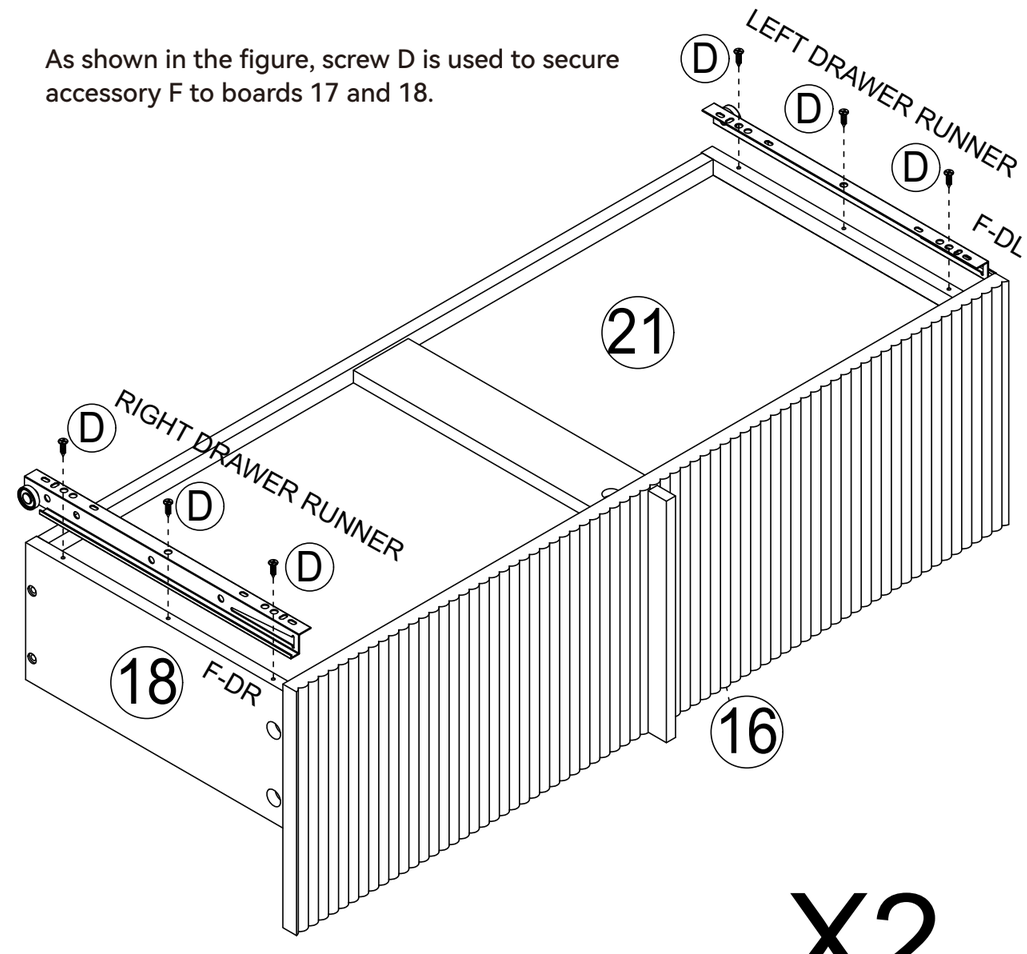

X2

Email : **service@grandtunnel.com**

EN

Step 21

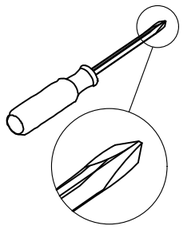

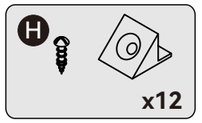

Insert the plastic buckle into the groove of the back panel, pass the strap through the hole in the plastic buckle, and lock it in place.

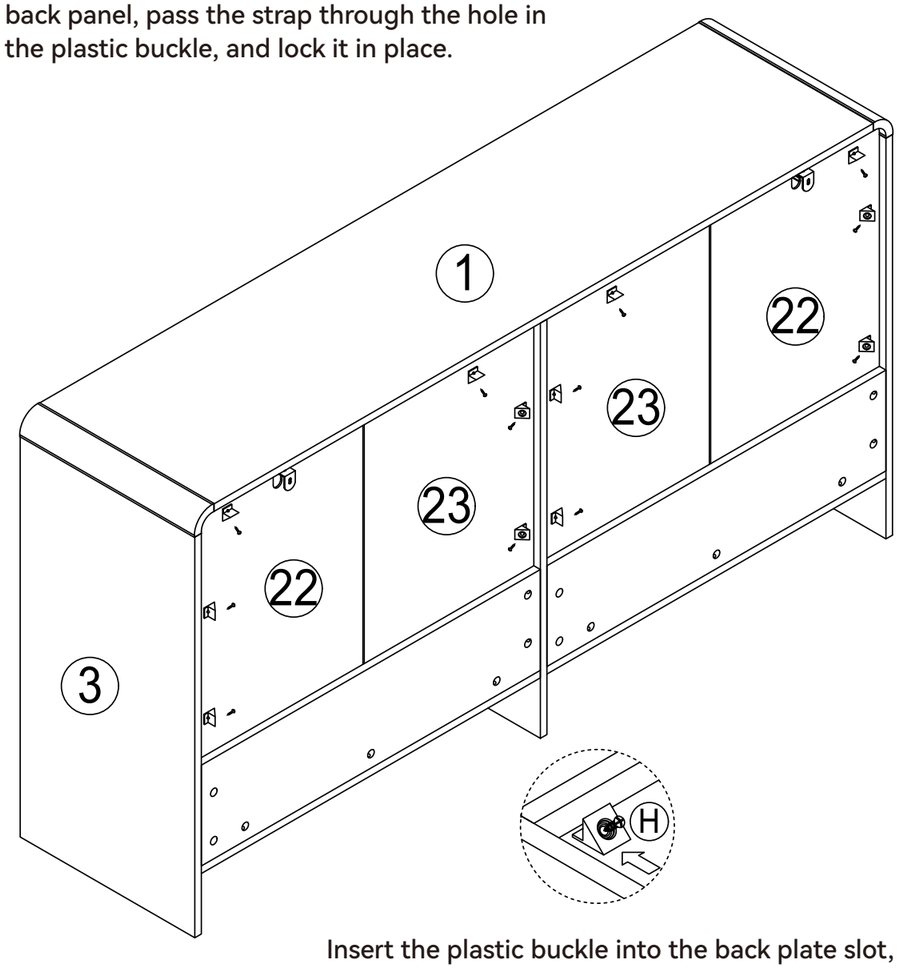

Insert the plastic buckle into the back plate slot, screw through the hole in the plastic buckle and lock it in place.

Email : **service@grandtunnel.com**

Step 22

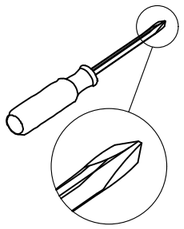

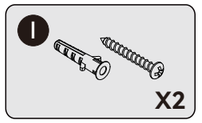

Install the tipping restraint hard ware

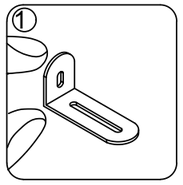

1.Make marks on the wall.

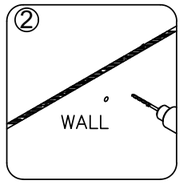

2. Drill two holes with a diameter of 6 mm in the wall.

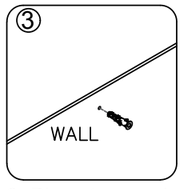

3. Place two anchors into the holes

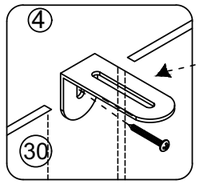

4. Use long screws to secure the accessory to the wall.

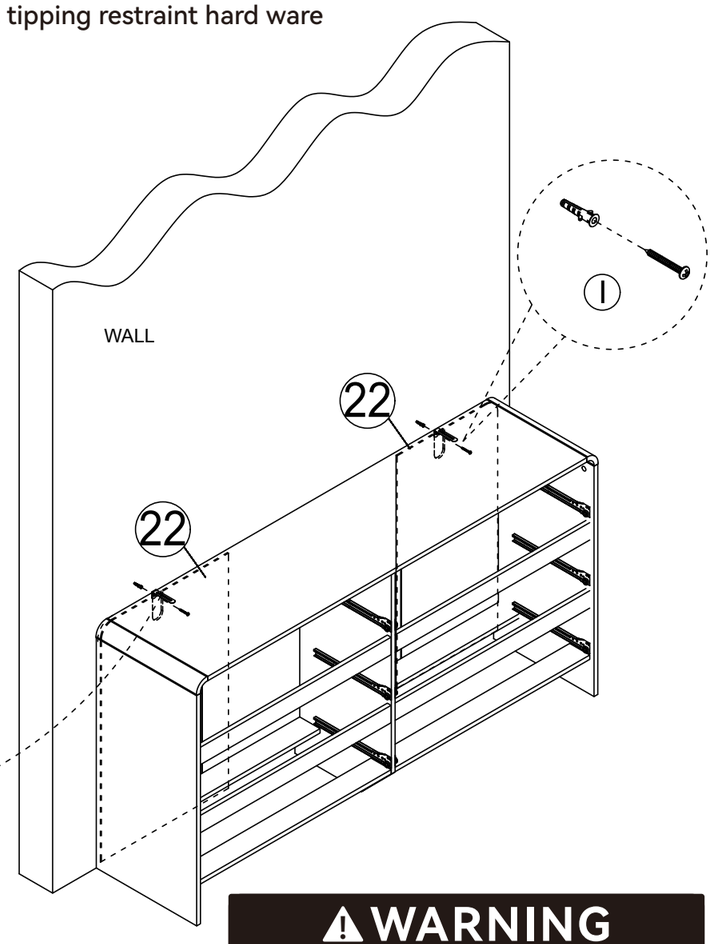

⚠ WARNING

Childern have died from furniture tipover.
To reduce the risk of furniture tipover:

- ALWAYS install tipover restraint provided.
- NEVER put a TV on this product.
- NEVER allow children to stand, climb or hang on drawers, doors, or shelves.
- NEVER open more than one drawer at a time.
- Place heaviest items in the lowest drawers.

This is a permanent label. Do not remove!

EN

Email : **service@grandtunnel.com**

EN

Step 23

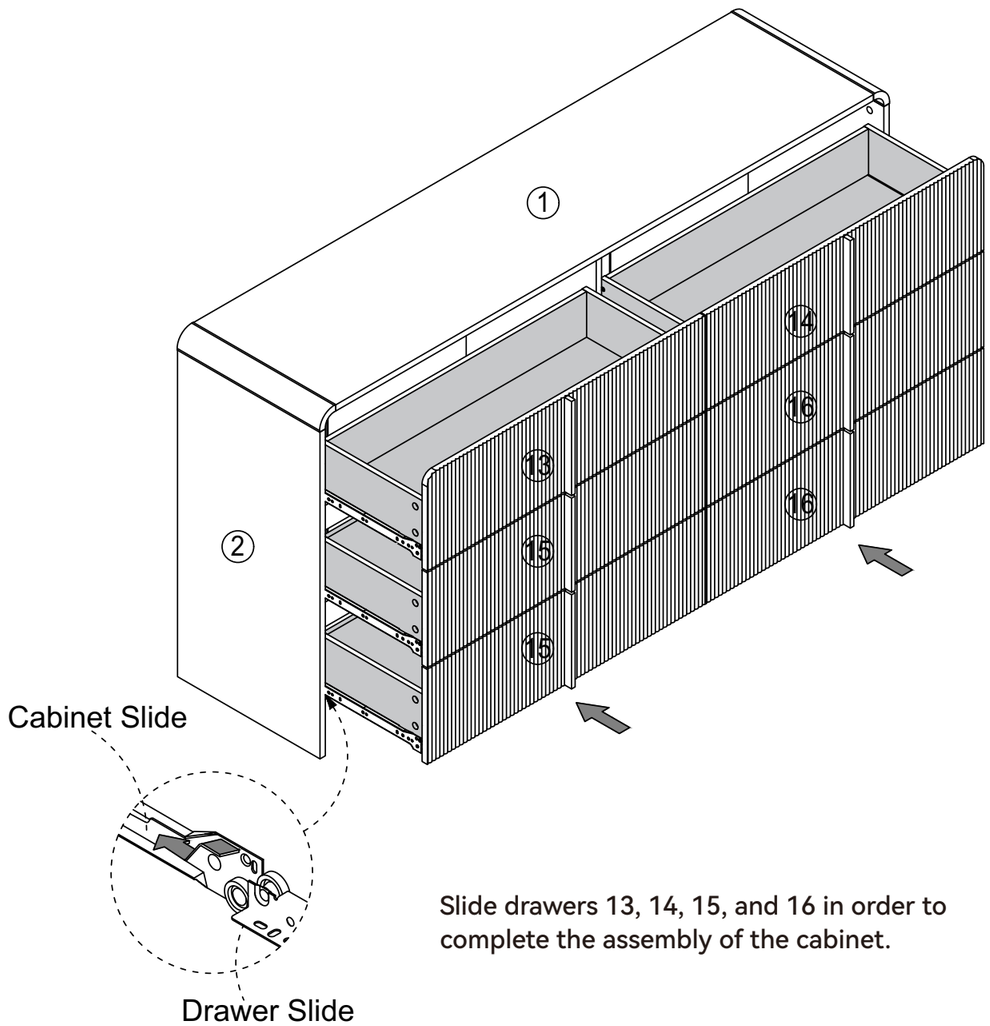

Slide drawers 13, 14, 15, and 16 in order to complete the assembly of the cabinet.

Email : **service@grandtunnel.com**

Step 24

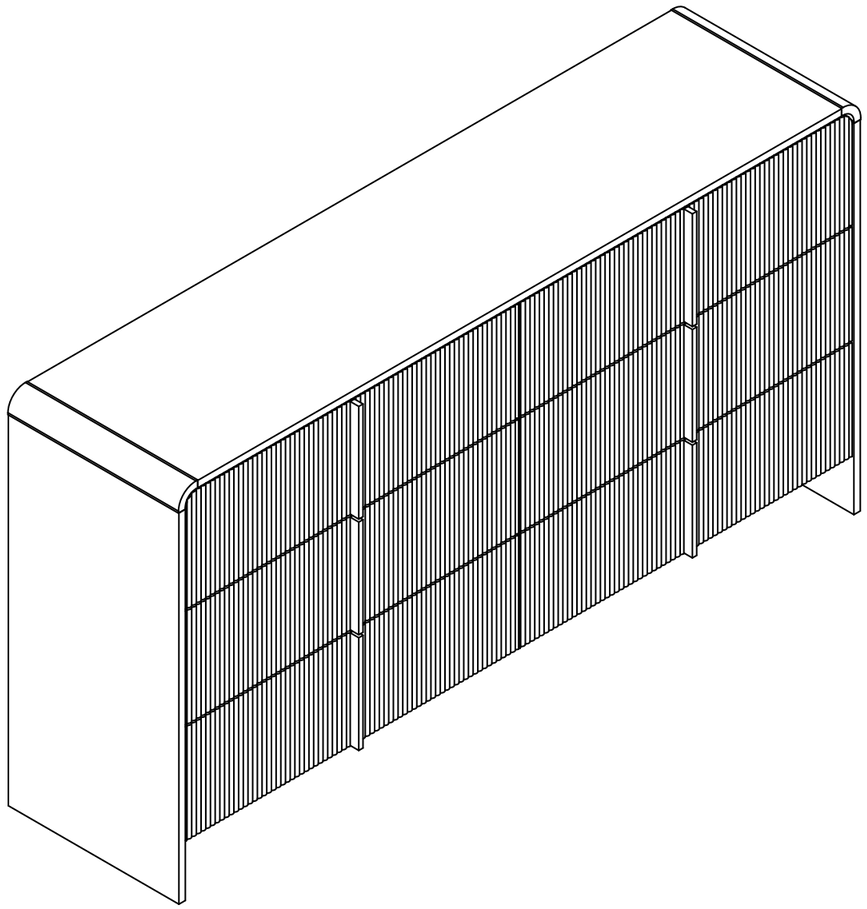

The cabinet installation is complete.

Email : **service@grandtunnel.com**

EN