Assembly Instructions

Caution: You must read this before you proceed

CHAIR

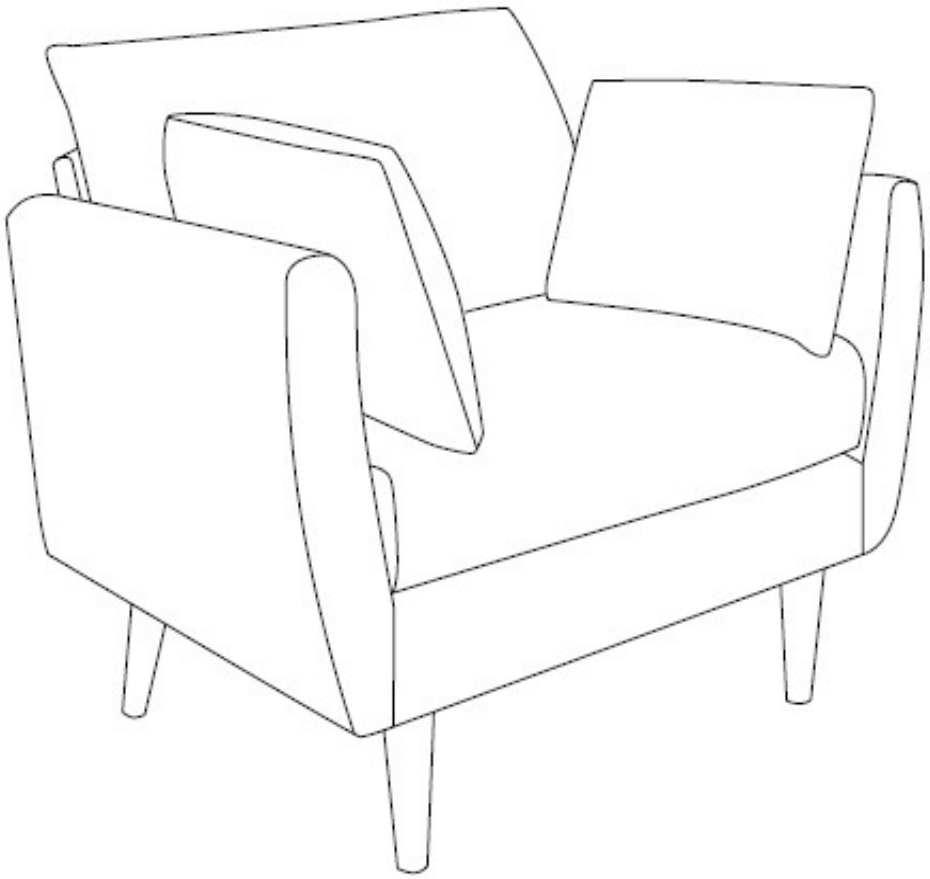

Part List

Label	Picture	Description	QTY
A		Backrest	1
B	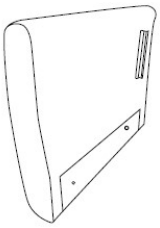	Left Armrest	1
C	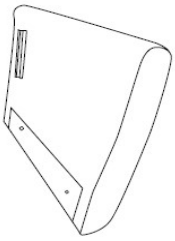	Right Armrest	1
D	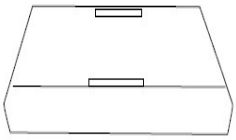	Seat Frame	1
E	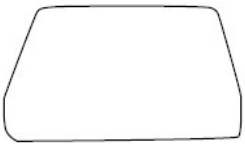	Seat Cushion	1
F		Back Cushion	1
G		Arm Pillow	2
H	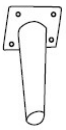	Front Leg	2
I		Back Leg	2

Hardware List

Label	Picture	Description	QTY
①		Screw Arbor(M8*70MM)	5
②		Spring Washer Ring(M8)	5
③		Flat Washer Ring(M8)	5
④		Nut	5
⑤		Spanner	1
⑥		Bolt(M6*25MM)	9
⑦		Spring Washer Ring(M6)	9
⑧		Flat Washer Ring(M6)	9
⑨		Allen Wrench	1
⑩		Plastic Washer	3

Assembly Preparation

Before Beginning Assembly:

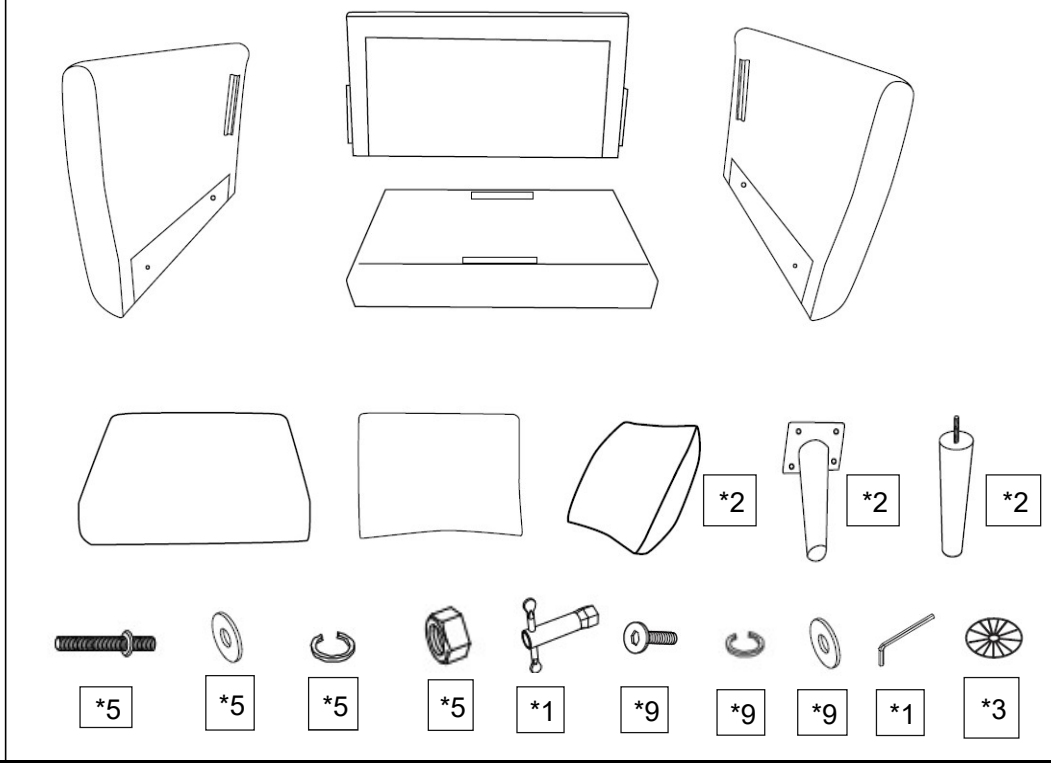

- Read instructions, cover to cover-
- Have 2 adults on hand for assembly-
- Do not assemble on flooring or carpet-
- Assemble on a clean non-marring surface (packing foam)-
- Save all packaging until finished-

Assembly Steps

OVERVIEW

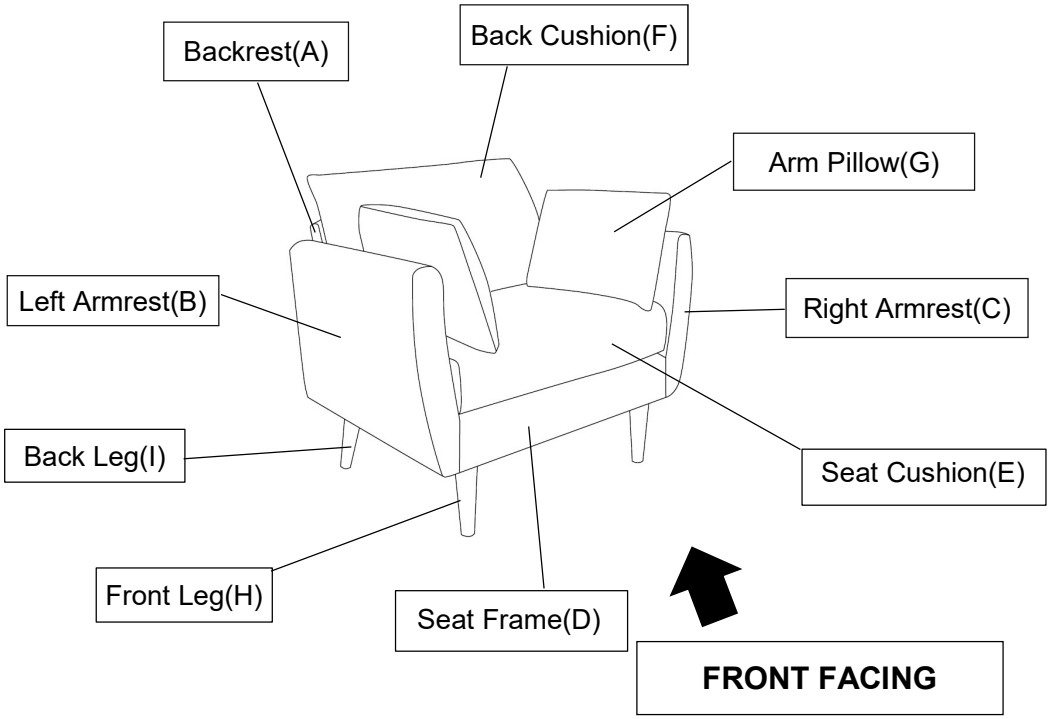

This CHAIR has multiple parts and may require up to 60 minutes to assemble. To give you an overview of the chair parts, the above picture is to help you put the various parts into perspective. Please read through the instructions below to familiarise yourself with the parts and steps before assembly.
Note: It is recommended that you have an adult partner to assist during the entire assembly process.

Step 1

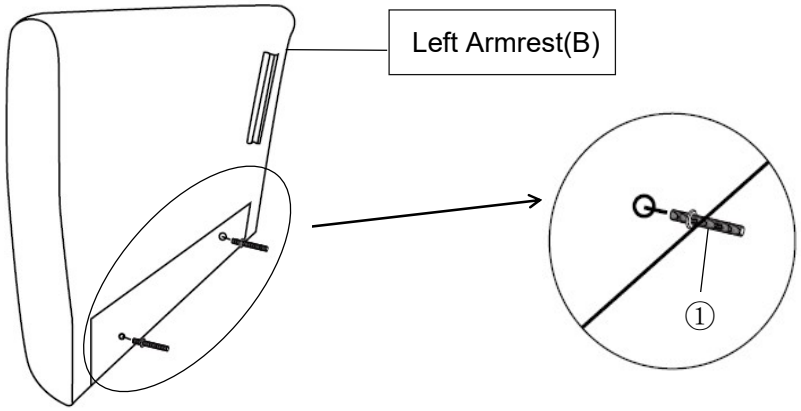

Screw the Screw Arbors(①) into the mounting positions on the Left Armrest(B) by hand until tight.
Repeat the same step with the Right Armrest(C).

Step 2

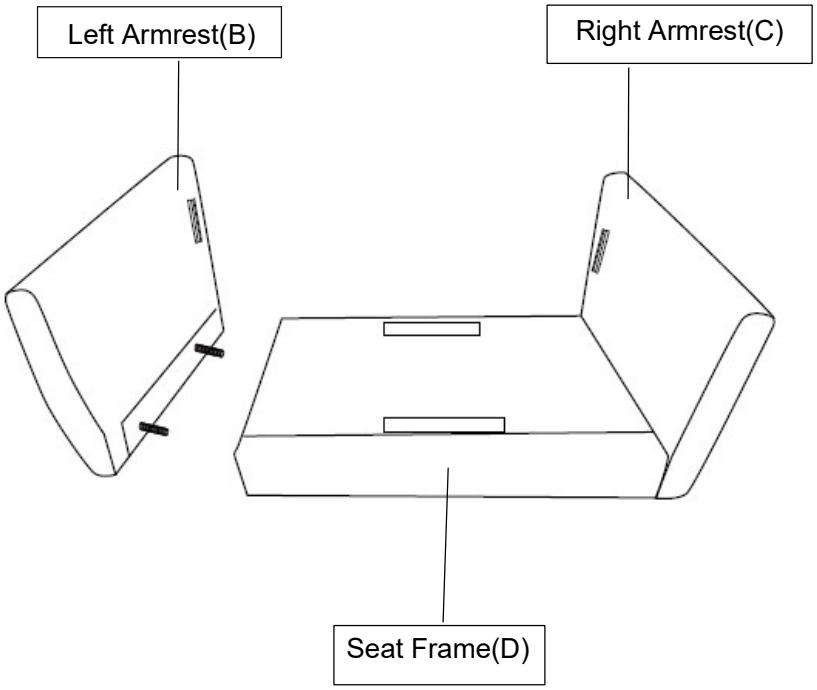

Attach the Left Armrest(B) and Right Armrest(C) to the Seat Frame(D) as shown above.

Step 3

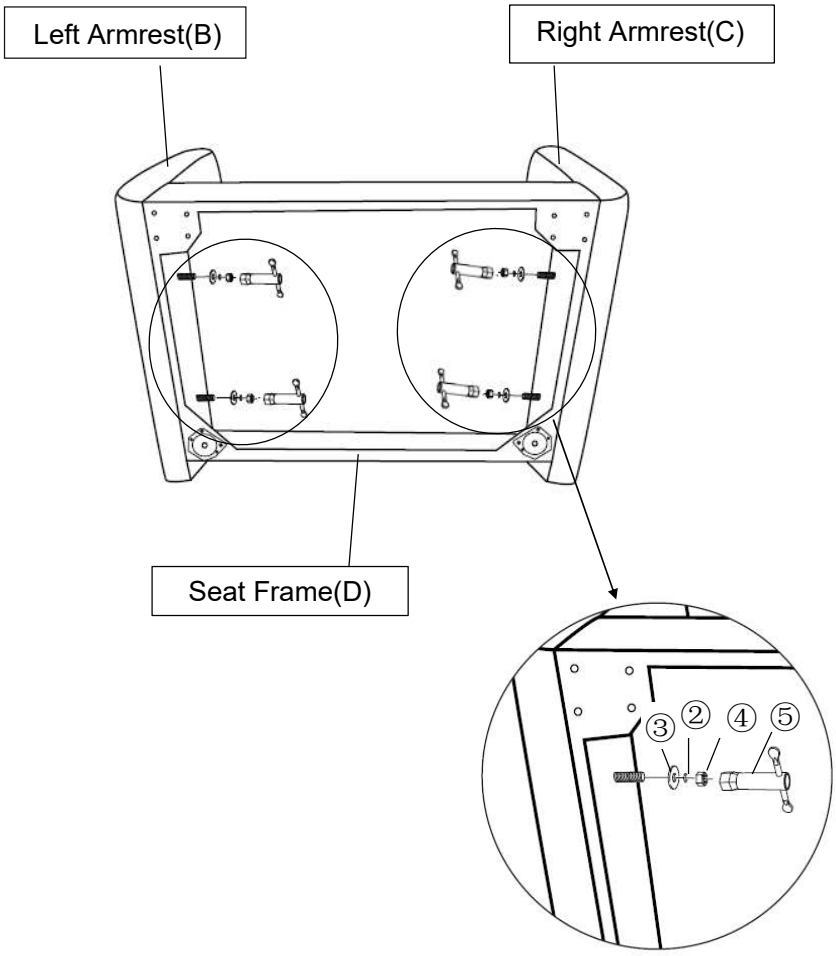

After step 2, turn the chair to the position shown in the above picture, and secure the Left Armrest(B) and Right Armrest(C) to the Seat Frame(D) using Nuts(④),Spring Washer Rings(②), and Flat Washer Rings(③) with the Spanner(⑤), turning clockwise for about 0.5 inches (half an inch).

Step 4

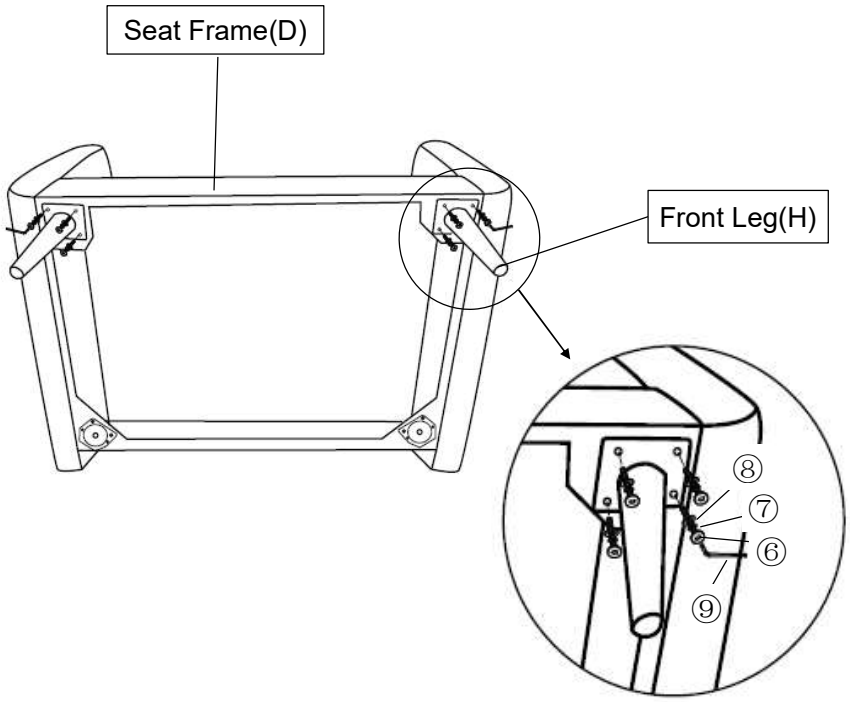

Install the Front Leg(H) to the Seat Frame(D) using Bolts(⑥),Spring Washer Rings(⑦), and Flat Washer Rings(⑧) with the Allen Wrench(⑨) turning clockwise until tight.
Repeat the same process with remaining Front Leg(H).

Step 5

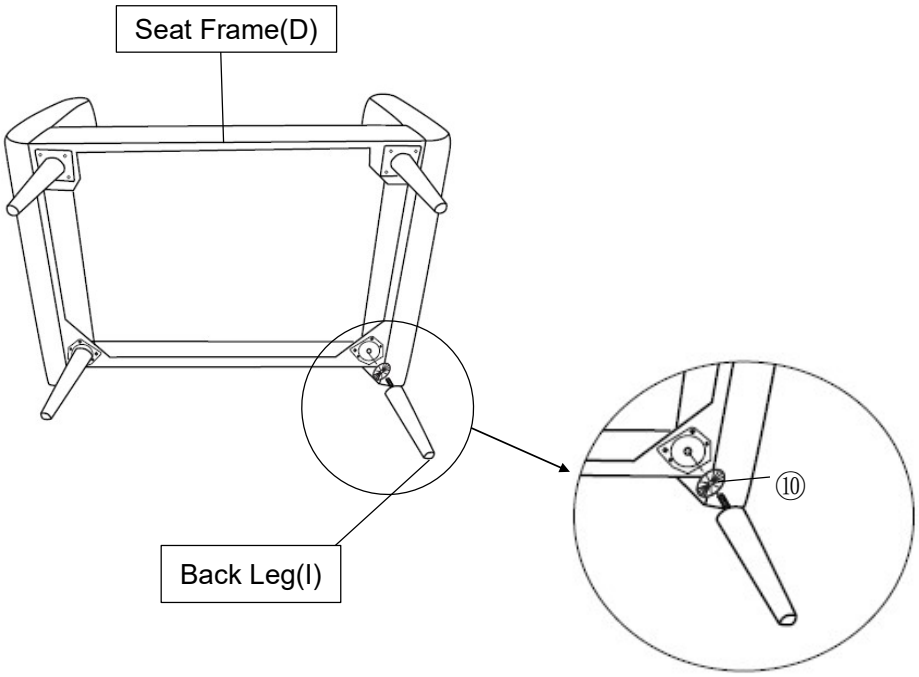

Install the Back Leg(I) into the Seat Frame(D) by placing a Plastic Washer(⑩) on the threaded stem.Then insert the threaded stem into the threaded mounting postion at the bottom of the Seat Frame(D).
Repeat the same process with the remaining Back Leg(I).
Note: The use of Plastic Washers(⑩) are OPTIONAL and are especially useful to help alleviate slight wobbles. Some Legs may need more than one whilst some legs may not need any.

Step 6

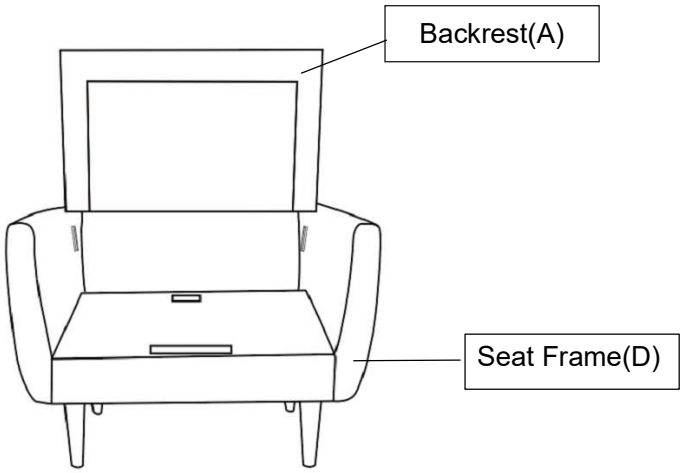

Position the Seat Frame(D) right side up, and hold the Backrest(A) up behind the Seat Frame(D) as shown in the above picture.

Step 7

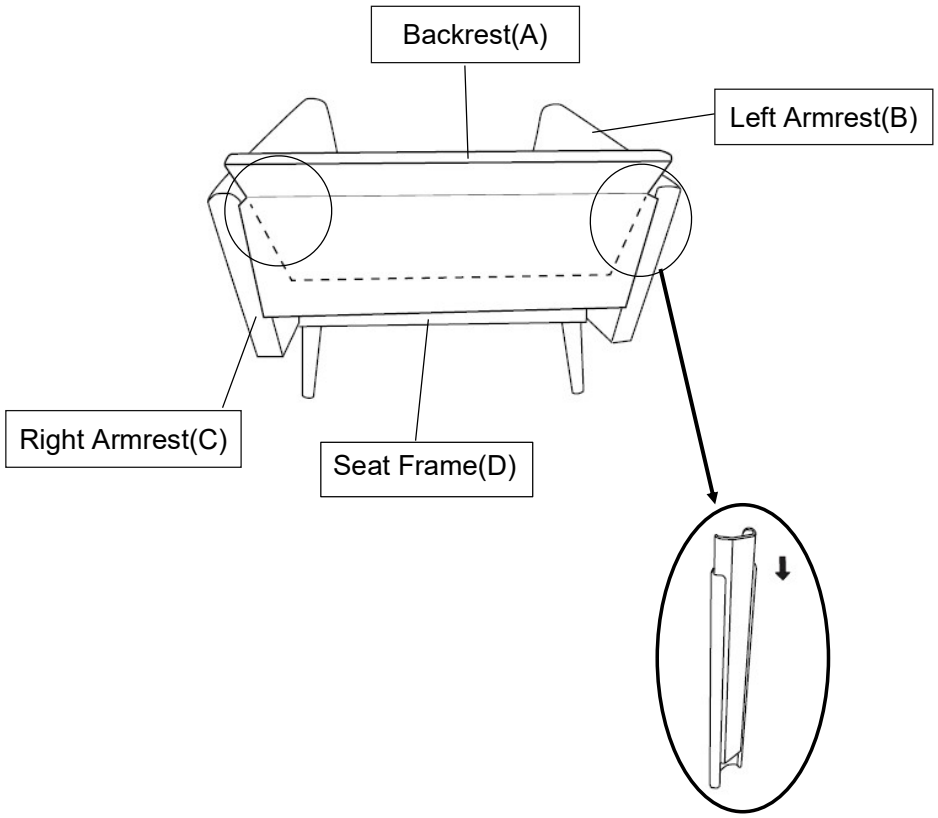

Slide the Tapered Connectors on the Backrest(A) into theTapered Connectors on the Left Armrest(B) and the Right Armrest(C) as shown above.
Then tighten all the nuts under the Seat Frame(D).

Note: Make sure the Tapered Connectors on the Backrest(A) lock into the Tapered Connectors on the Left Armrest(B) and Right Armrest(C).
Assistance from an adult partner is necessary for this assembly process.
During this assembly process - do exercise caution. You may need to use your hand to press down and or pave away the padded surface to facilitate the 'slip and slide' assembly.
Caution: Ensure that your fingers do not get caught or pinched in the assembly process.

Step 8	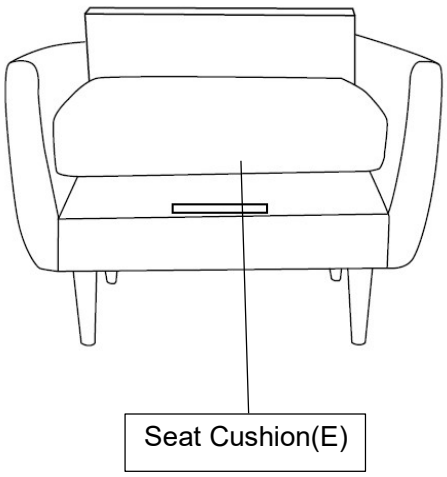
Place the Seat Cushion(E) on the chair.	
Step 9	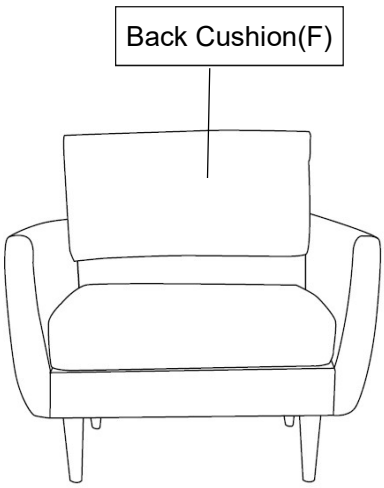
Place the Back Cushion(F) on the chair.	
Step 10	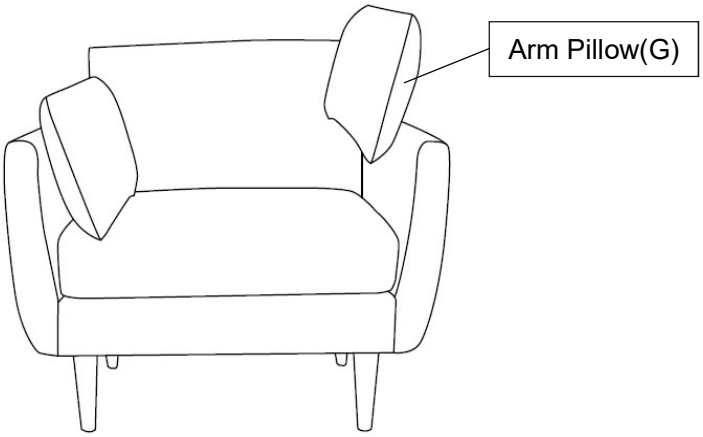
Place the Arm Pillows(G) on the chair.	

Step 11	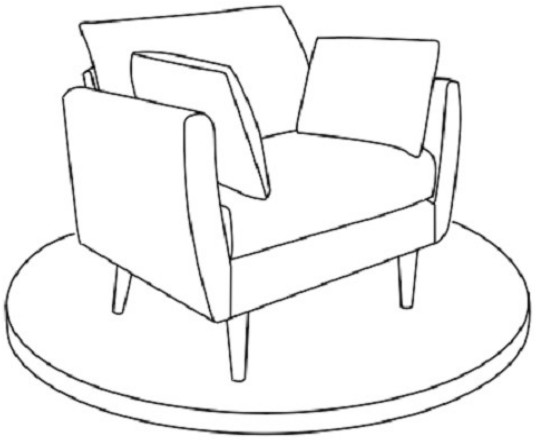
Position the Chair right side up and test for stability. Add or remove Plastic Washers(⑩)where needed to achieve stability.	
Step 12	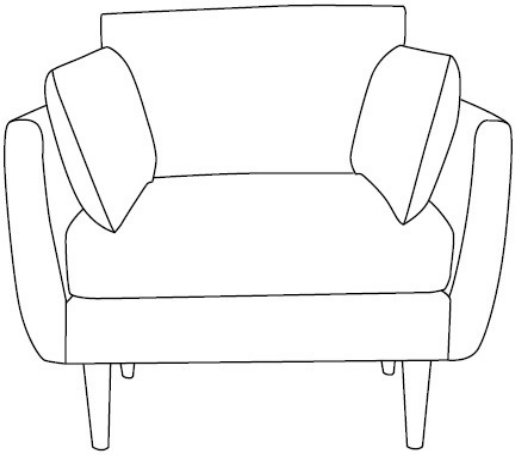
Your CHAIR is ready for use. This Chair can only be used on a flat, level surface.	

Care & Maintenance

- Furniture may scratch floors. We recommend using furniture pads to protect your floors.
- Do not put hot items directly on furniture surface.
- Do not clean furniture with harsh cleansers or polish.
- Do not place furniture under direct sunlight.
- Do not place furniture near heating or cooling vents.
- Do not write on furniture without a padded barrier to protect the surface.
- Do not place furniture outside . For indoor use only.
- Not for commercial use. For residential use only.
- Stains may be removed with mild soap solution and damp cloth.
- Children should not climb or jump on the furniture.

- Dust and pick-up spills using a clean, non-colored, lint-free cloth.