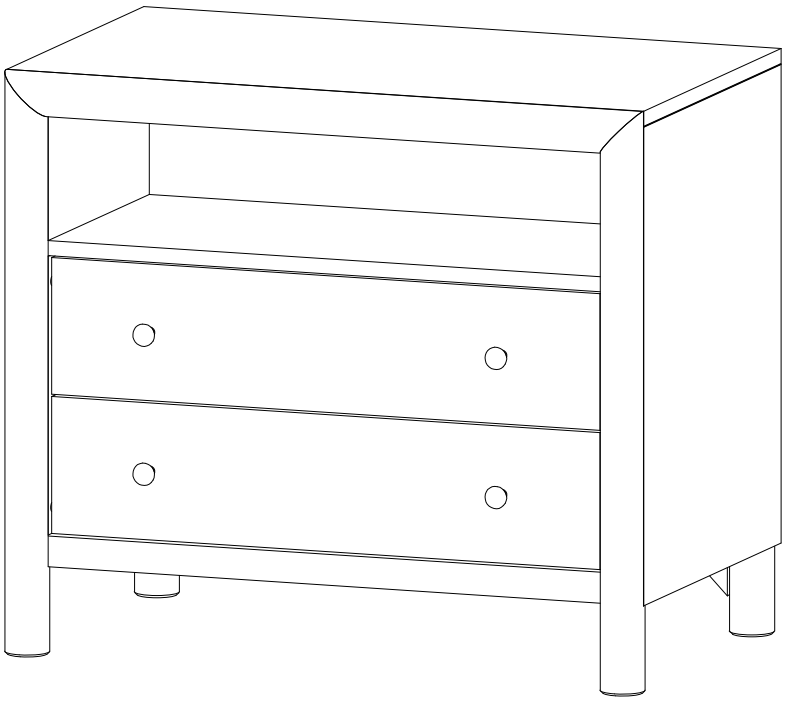

Weight Limitation

100 LBS

ITEM NO. NSCS1612-NAT

Thank You For Choosing Our Furniture

If you have any questions or concerns, don't hesitate to reach out to us.

Call us: +1(833)324-2464
Email: hello@hulalahome.com

NOTE:
This brochure contains IMPORTANT safety info. Please read and keep it for future reference.

MAINTAINANCE AND WARNINGS

Before You Start

Please follow the steps below:

⚠ Check the packaging for any damage, deformation, or water stains. If there is significant damage, please contact us promptly.

⚠ Open the packaging and confirm that the panels, hardware, screws, etc are complete.

⚠ Please read the installation instructions carefully to understand the installation steps and precautions to ensure proper installation.

⚠ Clean the installation area in advance and ensure the ground is level and there is enough space to avoid damaging the furniture or making installation difficult.

⚠ Lay a protective mat on the ground to prevent scratching the floor during installation.

After-Sales Service

- If you encounter any issues or need technical support during use, please contact our after-sales team.We offer long-term maintenance and warranty services.

Precautions

⚠ This product for indoor use only. Do not expose it to outdoor elements or high-humidity environments.

⚠ Keep the product away from high heat or open flames to prevent fire nazards.

⚠ Do not allow children to climb on the product to prevent personal injury caused by tipping

Safety Warnings

⚠ If you notice any loose or damaged parts,stop using the product immediately and contact customer service.

⚠ Do not attempt to disassemble or replace any components yourself,as this may affect the stability and safety of the product.

Daily Maintenance

- Do not use cleaning agents containing acids,alkalis,or corrosive substances, as they may damage the surface. It is recommended to use neutral cleaning agents or specialized furniture cleaners
- Avoid exposing furniture to humid environments for extended periods to prevent swelling or deformation of the boards. Use a dehumidifier or desiccant during humid weather.
- Avoid direct contact of furniture with water.If water is accidentally spilled, wipe it dry immediately.
- Avoid placing excessively heavy objects on the furniture: ensure the weight is within a reasonable load-bearing range.
- Avoid using sharp or rough items on the furniture surface to prevent scratches, Handle items gently when moving them

Explosive view

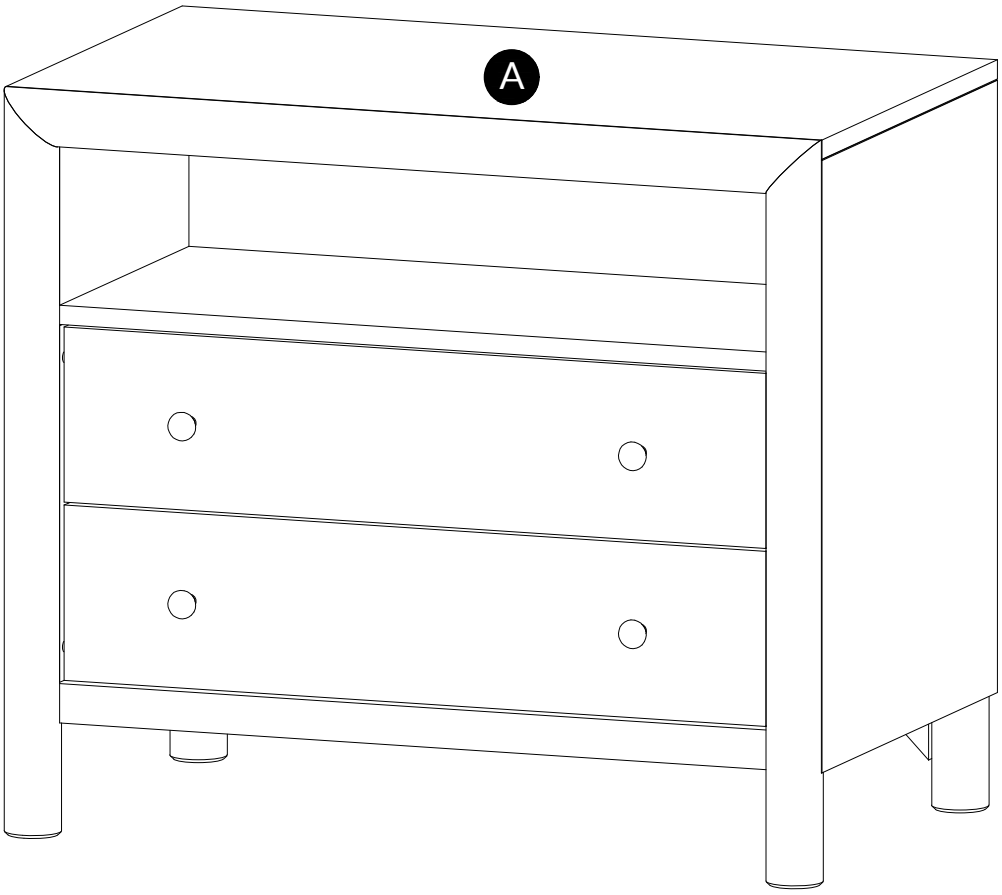

Parts list

A 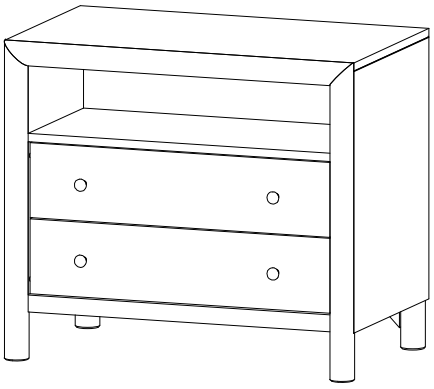 x1	

Installation:
15minutes.

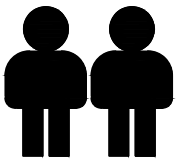

Two Person

Hardware List

1 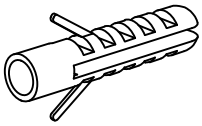 x4	2 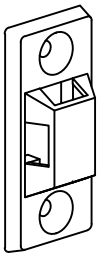 x4	3 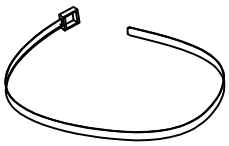 x2
4 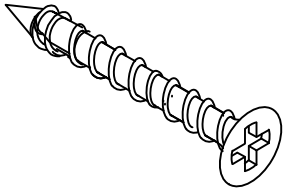 x4 D4x38mm	5 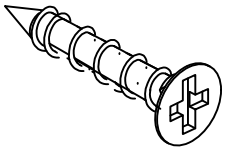 x4 D3x20mm	6 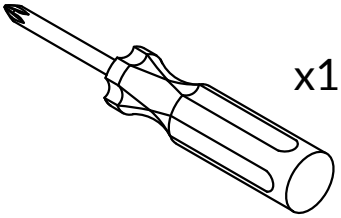 x1 Not including

Step 1

Use screw #5 to attach plastic bracket #2 to panel (A), make sure all holes aligned and tighten screw #5 with screwdriver #6.

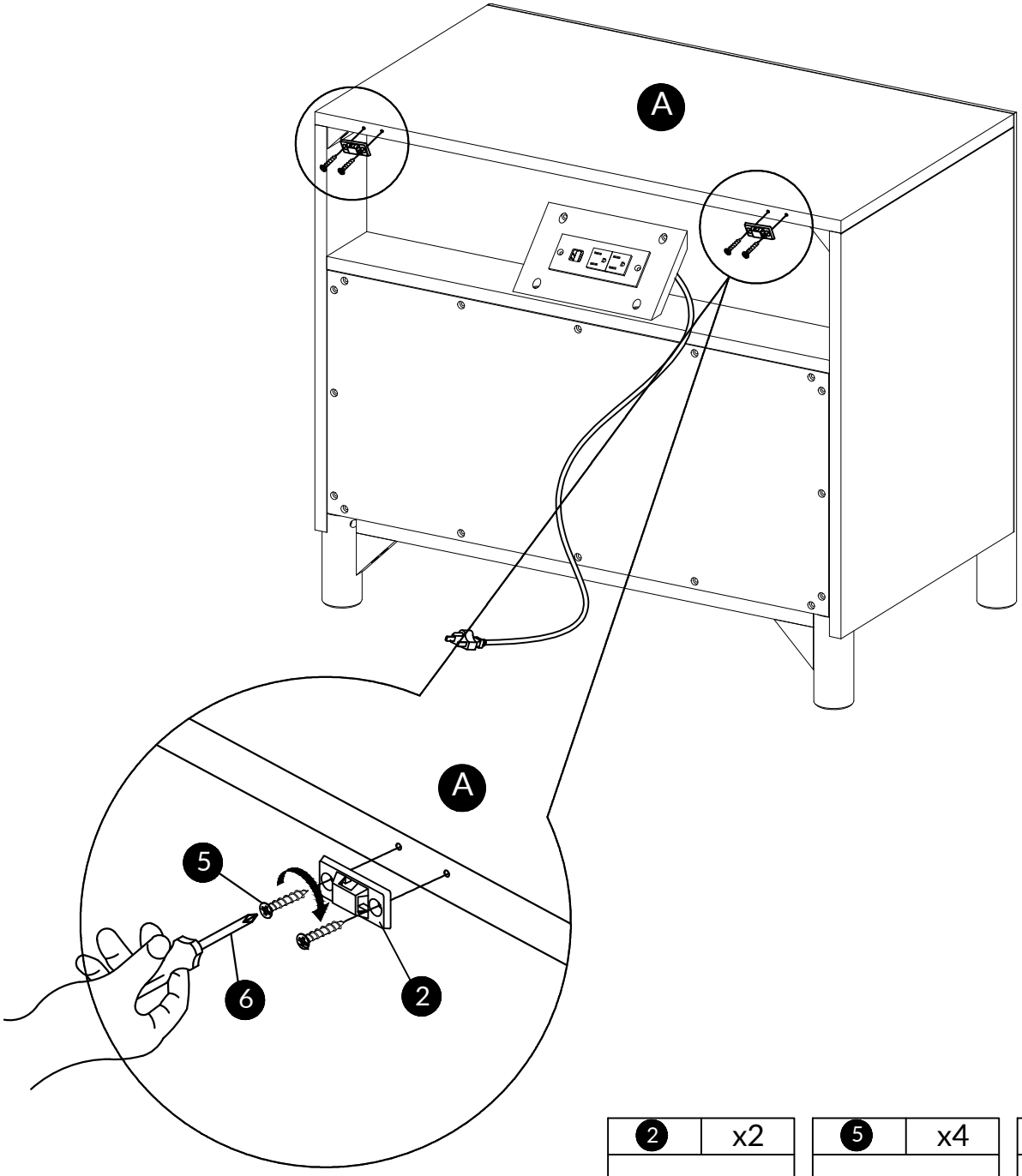

2	x2

5	x4
D3x20mm	

6	x1
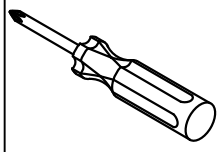	
Not including	

Step 2

1	x4	2	x2	4	x4	6	x1
				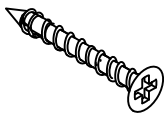	D4x38mm	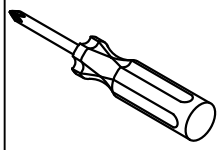	Not including

1.Install the anti-collapse device.
2.Mark the position on the wall, that corresponds to the location of part 2 on the of panel (A); Drill and insert the expandable screw 1 by hammer.
3.Assemble the part 2 to the wall. Align the hole in the part 2 with the expandable screw 1, use screw 4 to attach it and tighten by screwdriver 6.

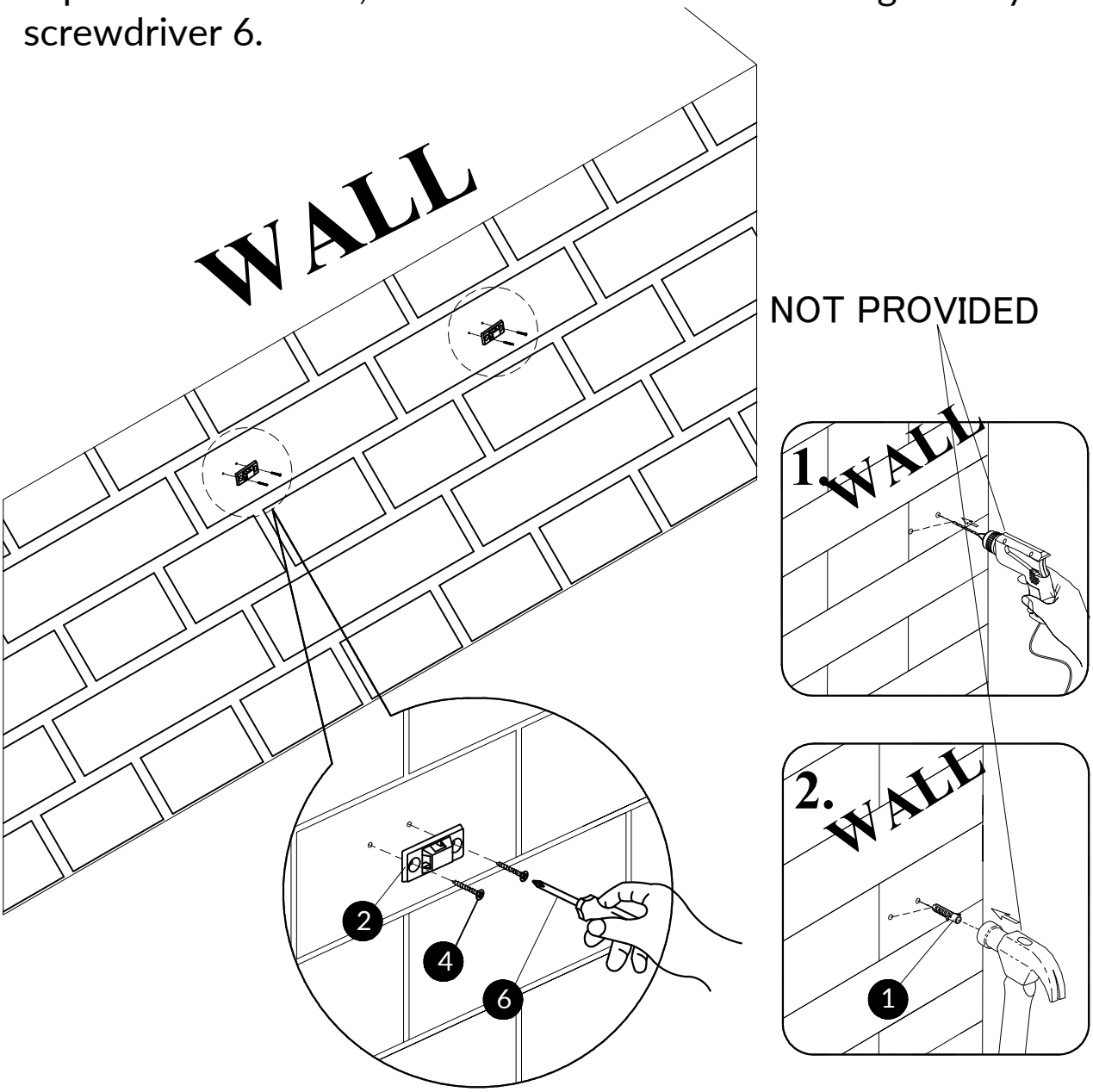

Step 3

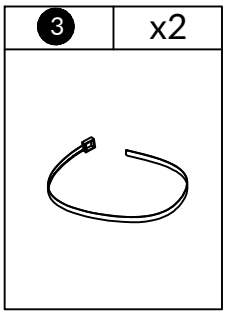

Let the plastic belt 3 pass through the both part 2 and pull tightly.

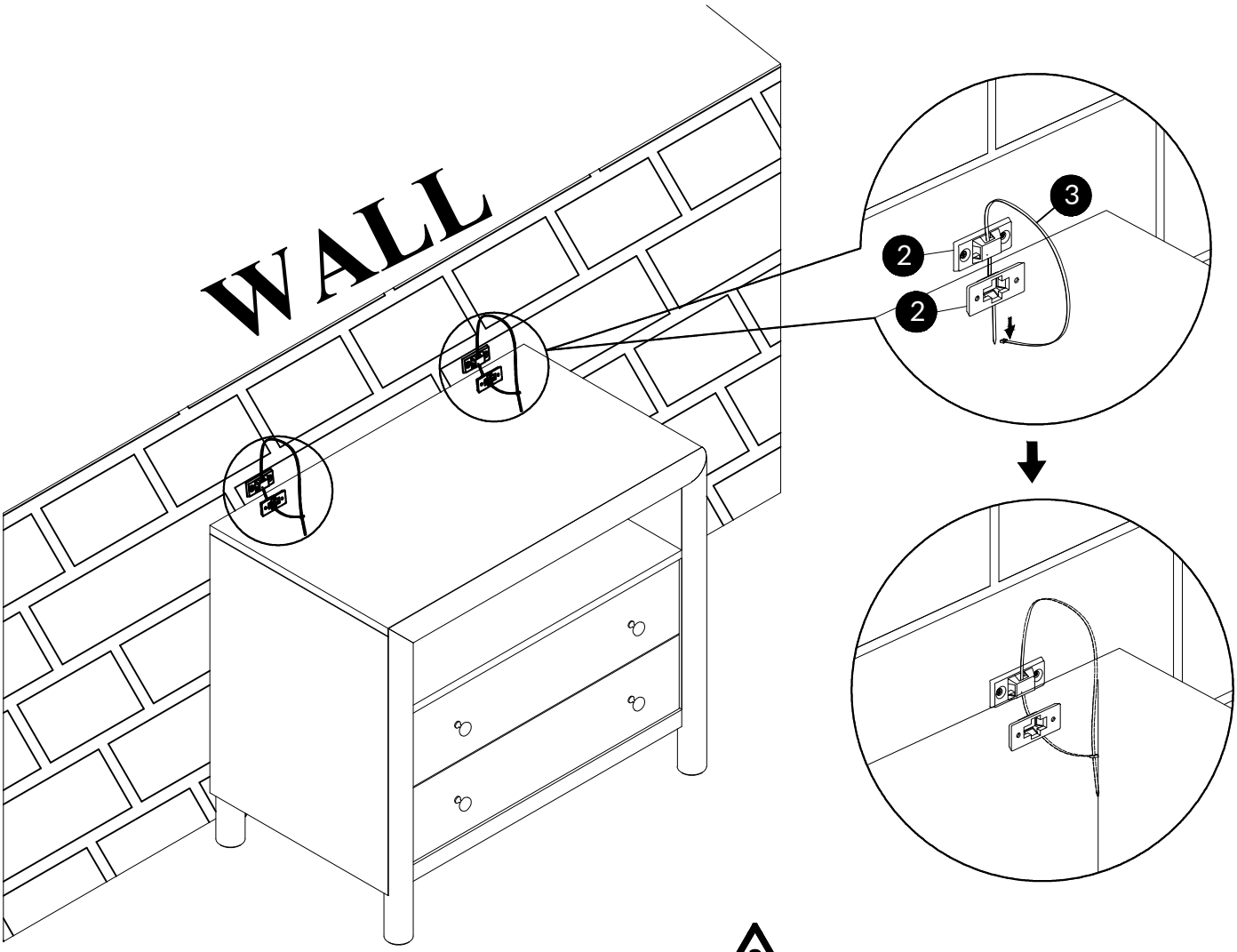

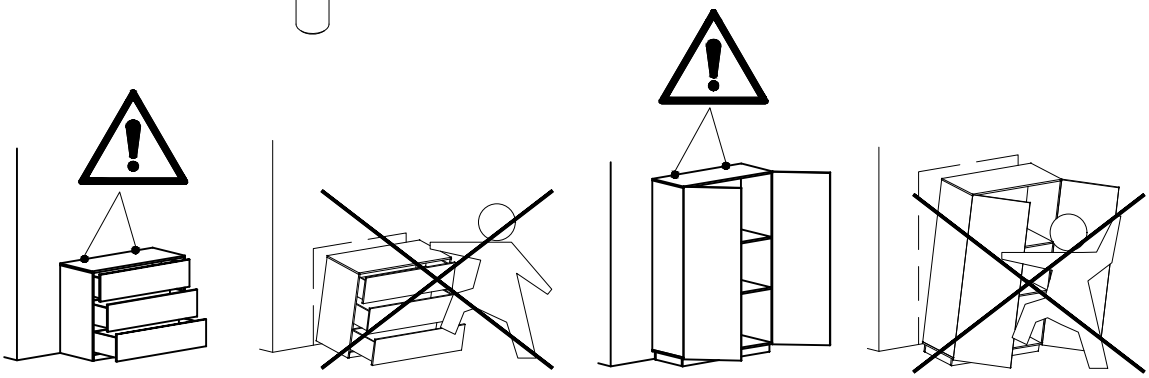

WARRANTY

- We strive to offer quality products, and we also try our best to satisfy every customer who orders from us with products or services as needed.

- We provide 30 days warranty starting from the time you receive the item. Each customer must provide a record of their orders such as the order number, or item receipt for any items that are out of the warranty period you may also still receive.

- Replacement parts by purchasing them from our company if they are available.

- For return,please check the return policy with the retailer or market place you bought from

Are you having difficulty

With assembly? Missing parts?
Please send an email with your order No.to
hello@hulalahome.com

Appreciate your purchasing from us.
Pop up your life by our furniture piece!