Modular Sectional Sofa with Pull-out Bed
Assembly Manual

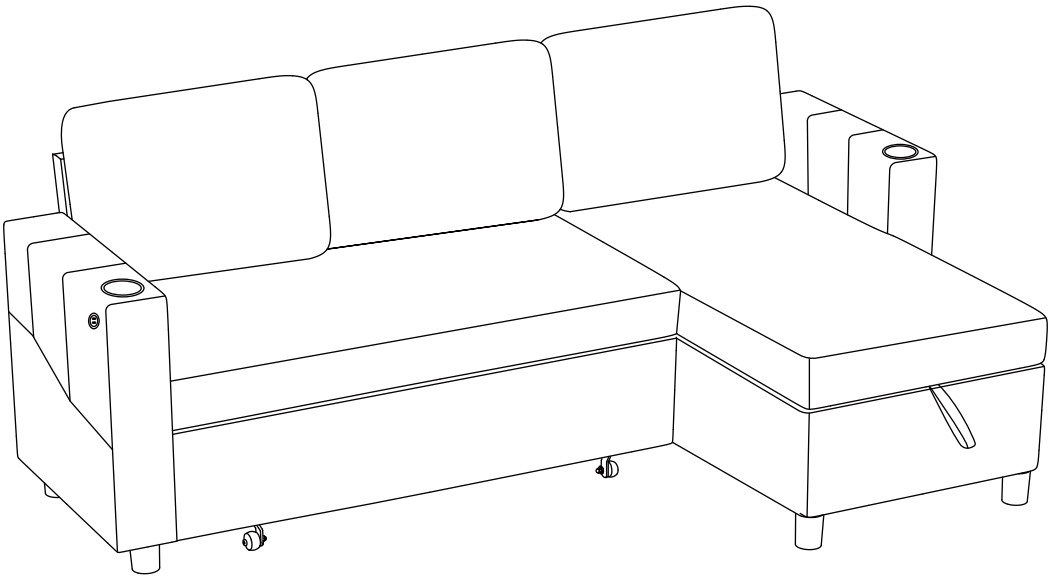

⚠ CAUTION

FOR ASSEMBLY, IT IS RECOMMENDED THAT TWO PEOPLE WORK TOGETHER, AS THE PRODUCT INVOLVES MANY COMPONENTS INSTALLATIONS.

THIS ASSEMBLY MANUAL CONTAINS IMPORTANT SAFETY INFORMATION. PLEASE READ AND KEEP FOR FUTURE REFERENCE.

Notice:
If you purchase an L-shaped sofa, it will consist of Box A and Box B (2 boxes in total). The configuration as shown below.Please refer to the following assembly sequence for specific steps.

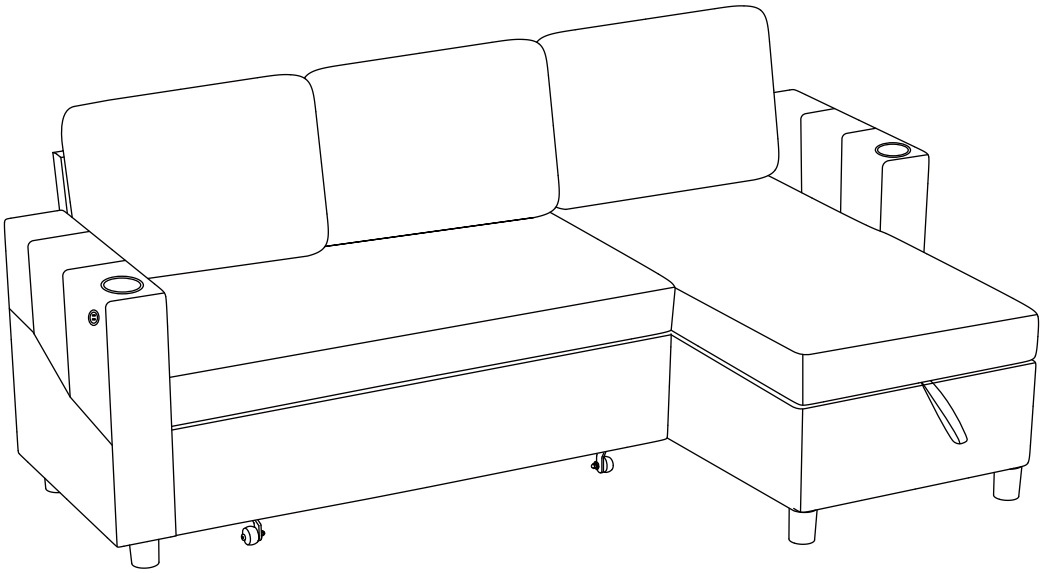

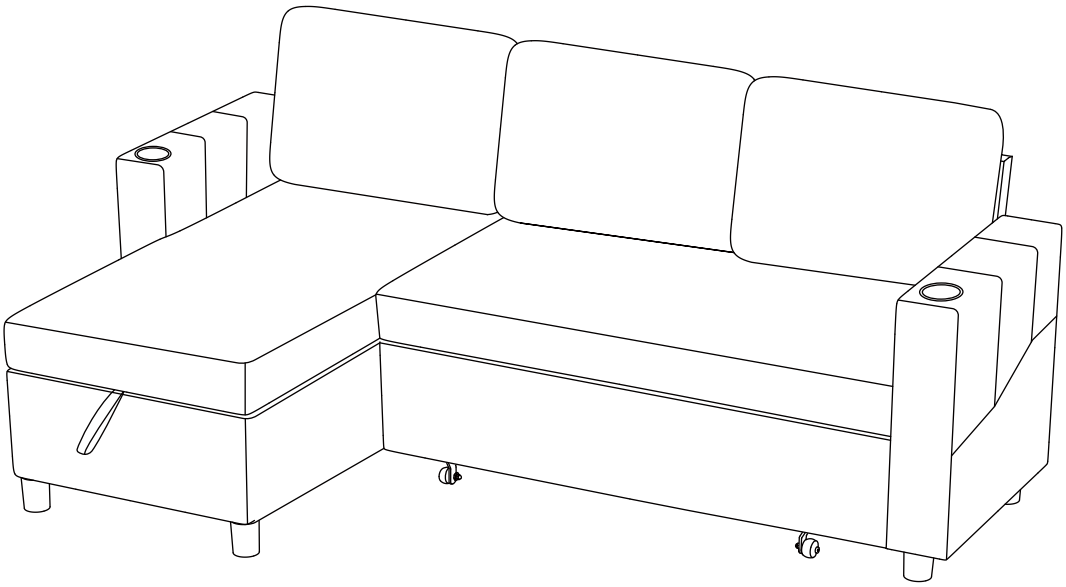

COMPONENTS

BOX A

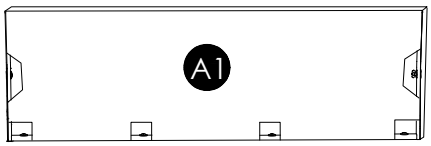

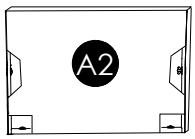

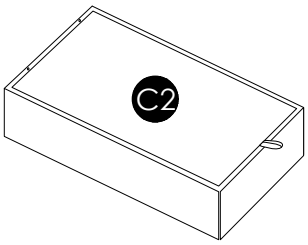

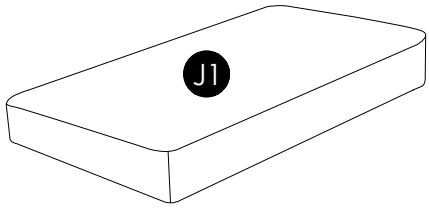

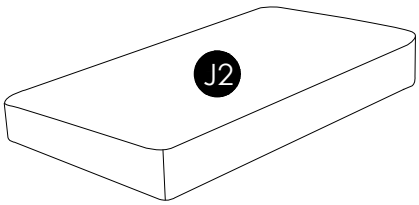

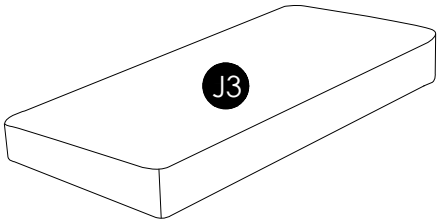

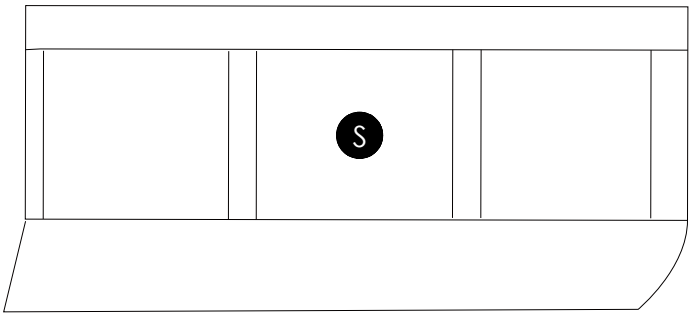

- **A1 Loveseat Backrest Frame** 1X
- **A2 Chaise Backrest Frame** 1X
- **C2 Chaise Base** 1X
- **J1 Loveseat Seat Cushion-L** 1X
- **J2 Loveseat Seat Cushion-S** 1X
- **J3 Chaise Seat Cushion** 1X
- **S Backframe Cover** 1X

COMPONENTS

BOX B

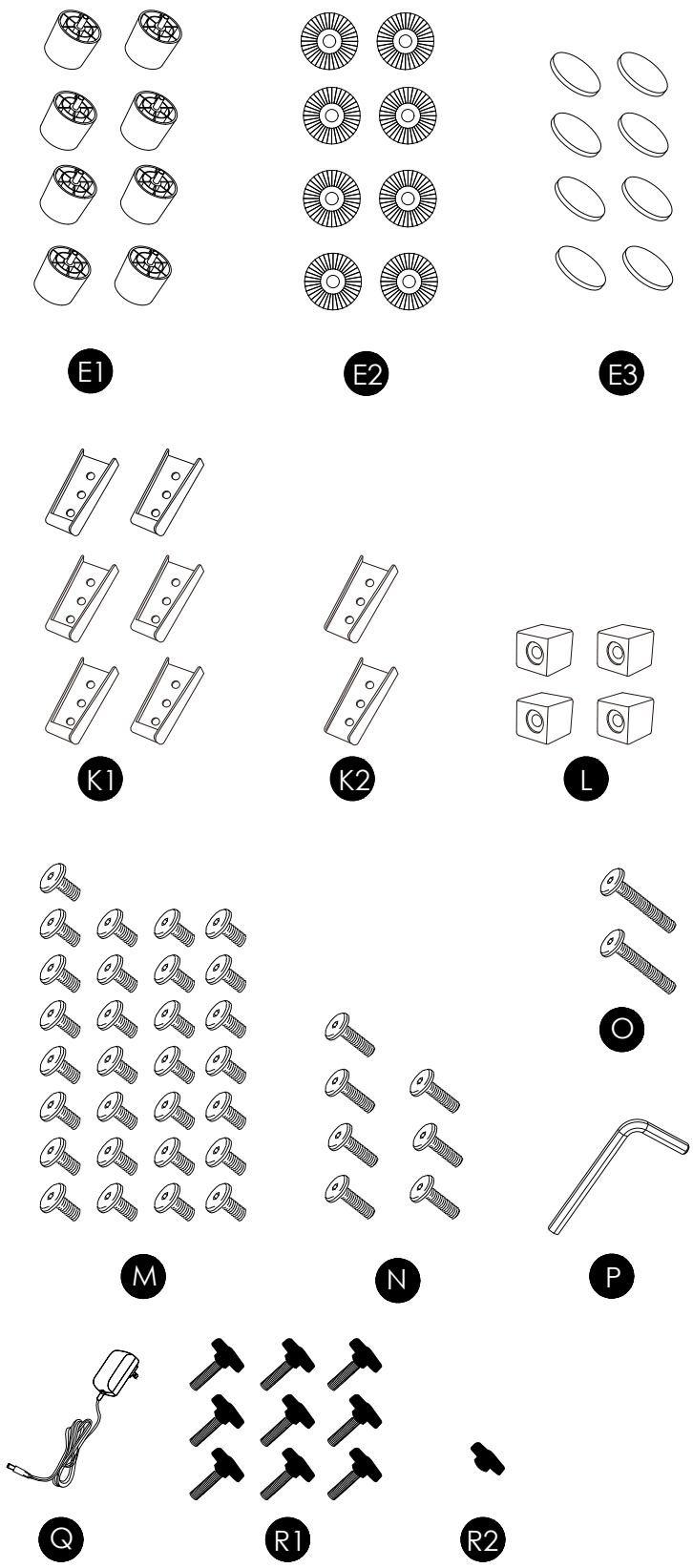

- **E1 Sofa Leg**
  8X
- **E2 Plastic Washer**
  8X
- **E3 Foot Pad**
  8X
- **K1 Female Connector**
  6X
- **K2 Male Connector**
  2X
- **L Chaise Seat Support Block**
  4X
- **M Bolt M6x15mm**
  28X +1Spare
- **N Bolt M6x30mm**
  6X +1Spare
- **O Bolt M6x60mm**
  1X +1Spare
- **P M4 Allen Key**
  1X
- **Q Power Cord**
  1X
- **R1 T Bolt M6x30mm**
  9X
- **R2 T Nut**
  1X

COMPONENTS

BOX B

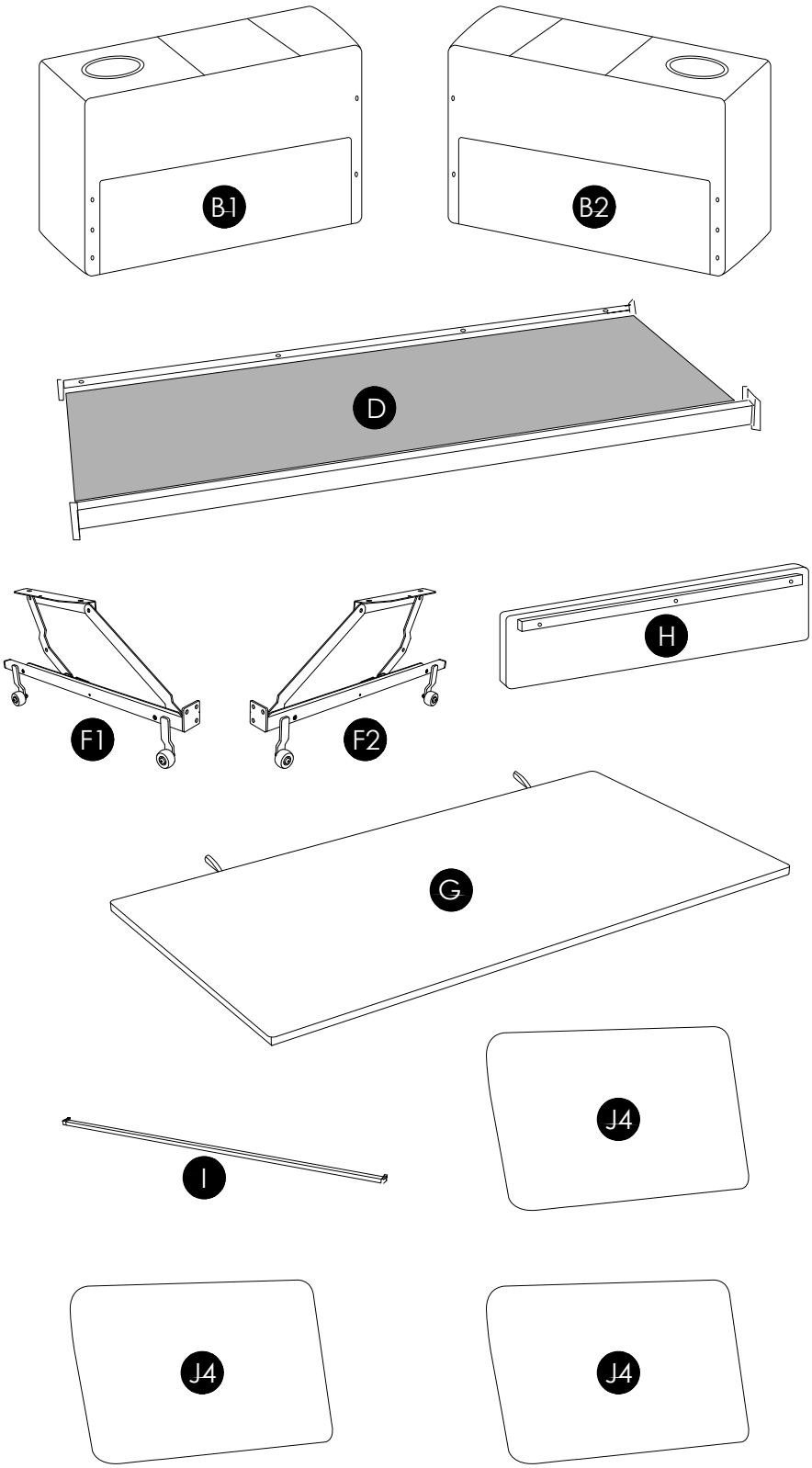

B1 **Left Armrest**
1X

B2 **Right Armrest**
1X

D **Loveseat Seat rail with Mesh Cover**
1X

F1 **Metal Slide Rail-L**
1X

F2 **Metal Slide Rail-R**
1X

G **Pull-out Bed Frame**
1X

H **Pull-out Bed Front Panel Component**
1X

I **Pull-out Bed Back Rail**
1X

J4 **Back Cushion**
3X

Please locate the Metal Slide Rail-L/R (F1&F2) , Hardware pack, Sofa leg (E1) and a Back Cushion (J4) from the Armrest (B1&B2) before assembly.

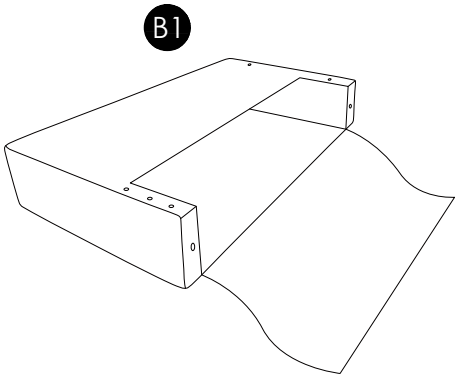

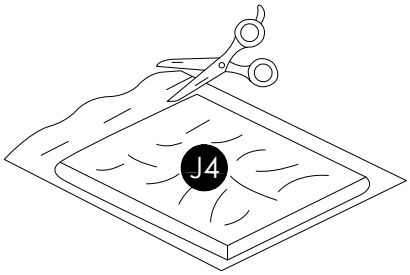

Note: The vacuumed cushion needs to be carefully cut open with tools.

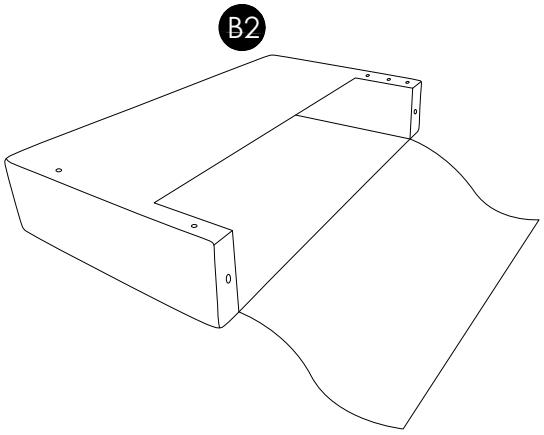

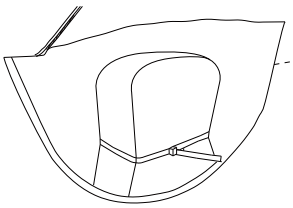

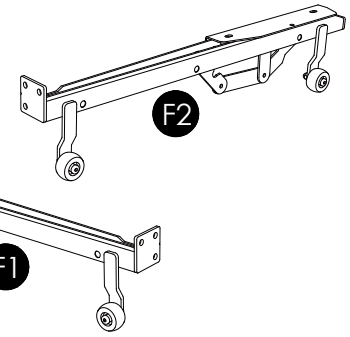

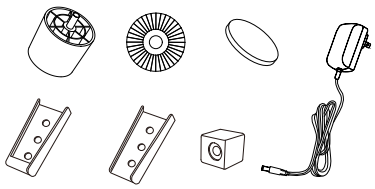

S7017B Hardware List			
M		M6x15mm Bolt	28+1
N		M6x30mm Bolt	6+1
O		M6x60mm Bolt	1+1
P		M4 Allen key	1
R1		M6x30mm T Bolt	9
R2		T Nut	1

Hardware accessories, power cord and sofa leg

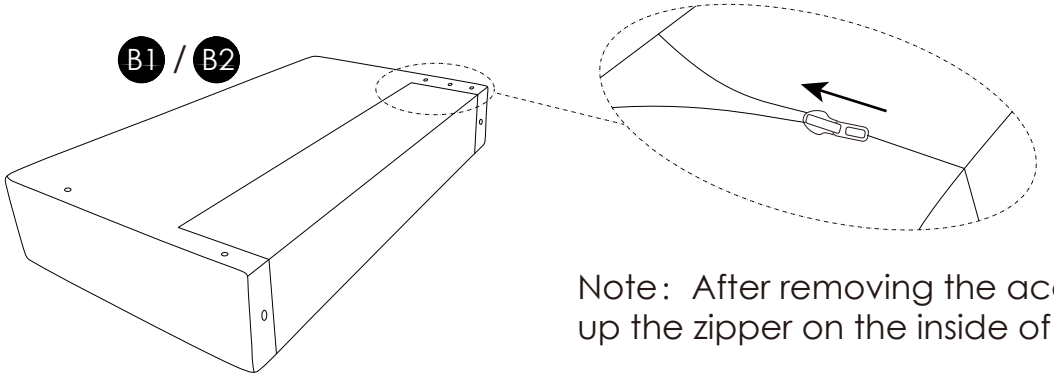

Note: After removing the accessories, zip up the zipper on the inside of the armrest.

1 Attach the Sofa Legs (E1) with the Plastic Washer (E2) to the Armrest (B1) & (B2), attach the Foot Fad (E3) to the bottom of the sofa legs,then attach Female Connector (K1).

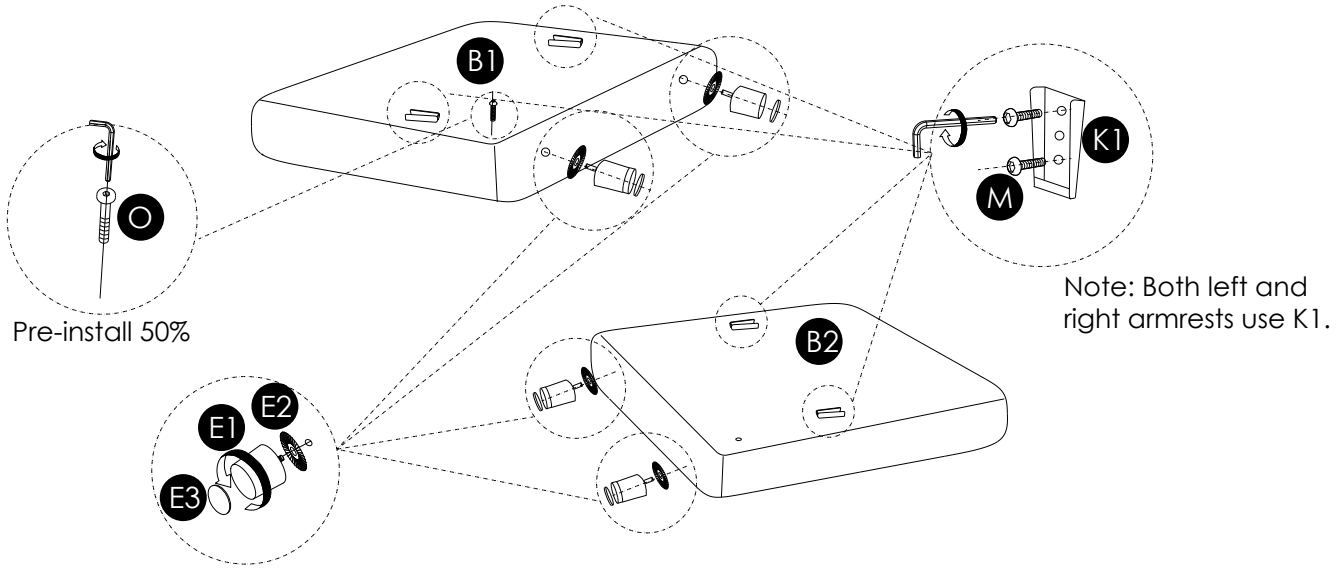

2 Attach the Sofa Legs (E1) with the Plastic Washer (E2) to the Chaise Base (C2), then attach the Foot Fad (E3) to the bottom of the sofa legs.

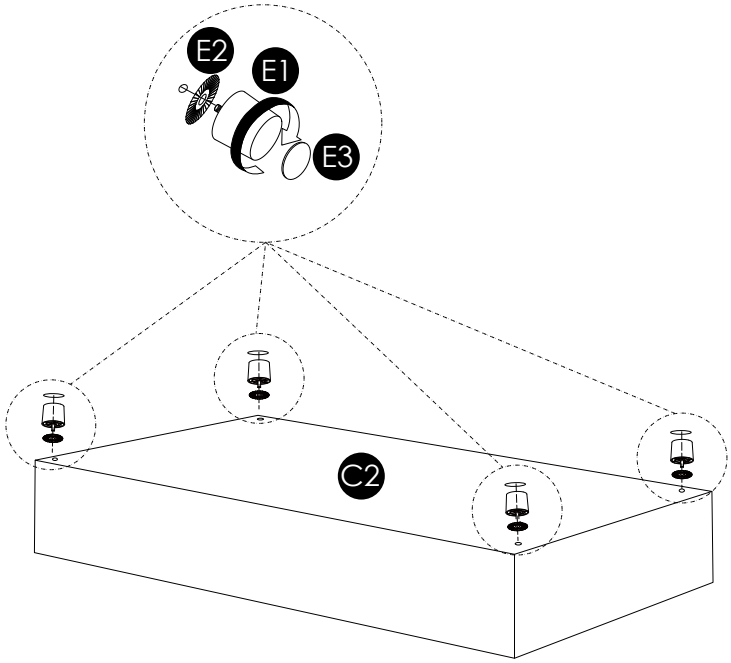

3 For Right-facing Chaise: Attach the Male& Female connector (K1)&(K2), Bolt (O) to the Chaise Base (C2), then lift the Chaise seat panel to attach the Chaise Seat Support Block (L).

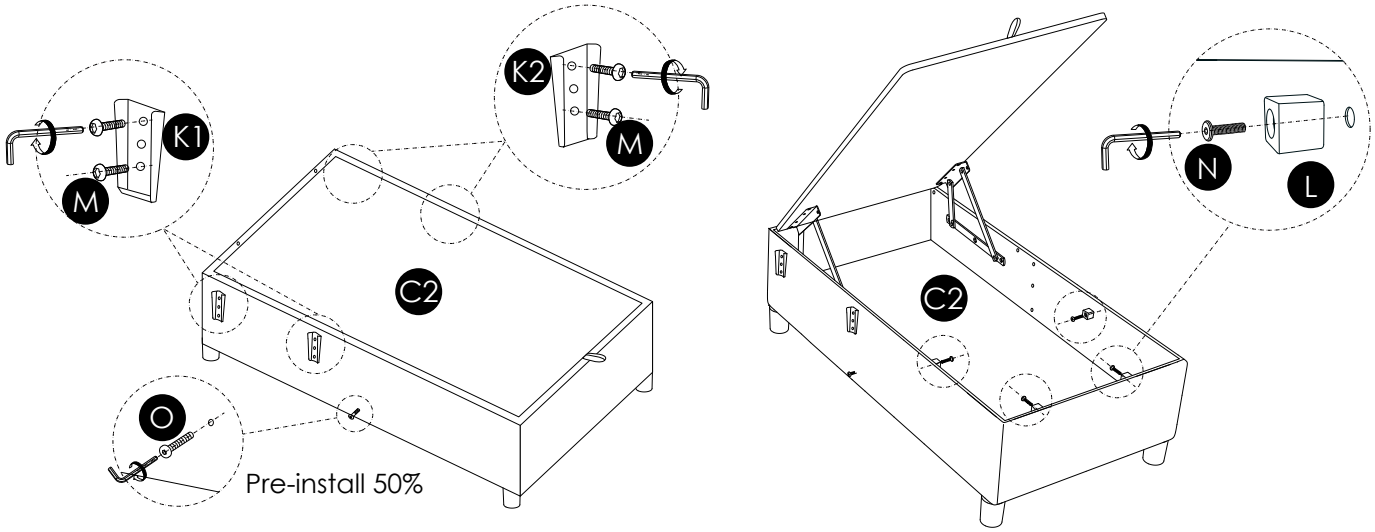

4 Attach the Chaise Base (C2)、Loveseat Seat Frame(D) to the Left & Right Armrest (B1) & (B2).

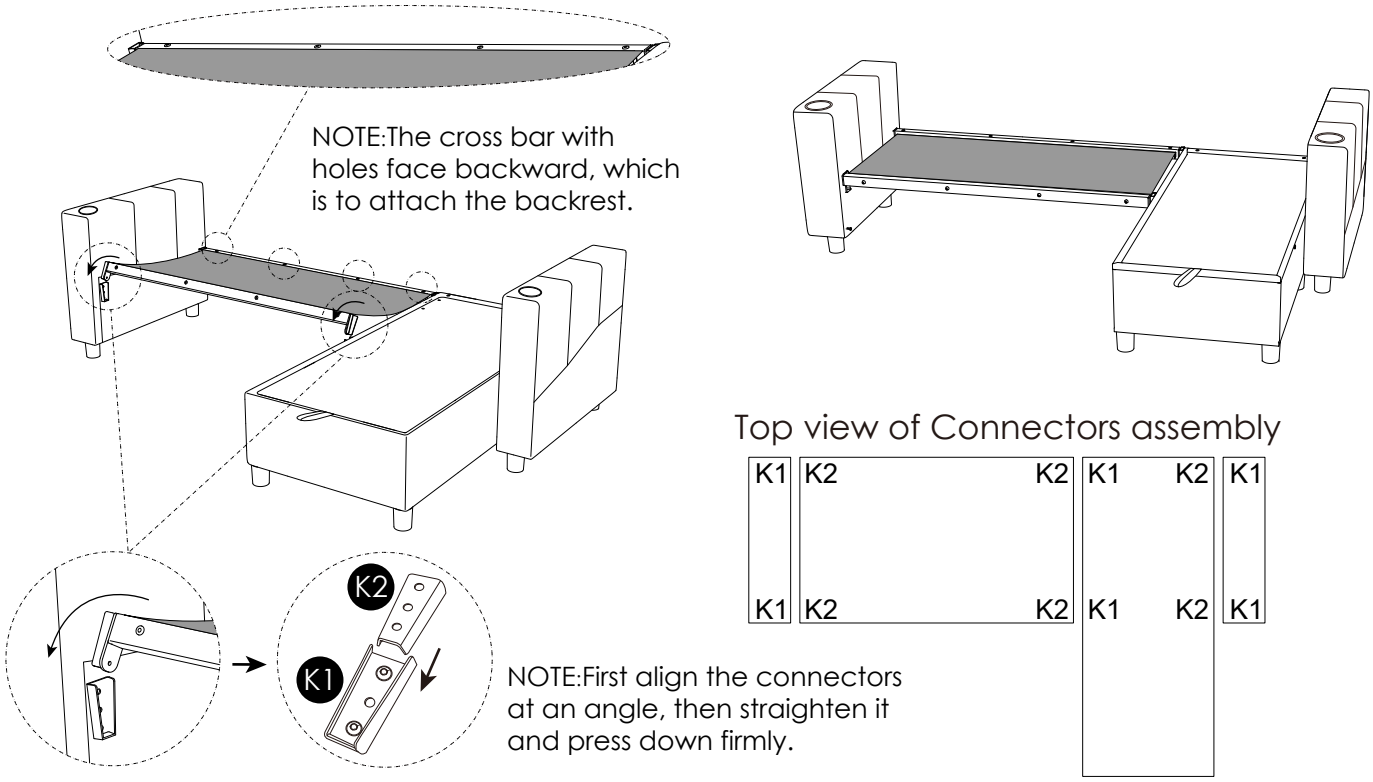

5 Attach the Loveseat and Chaise back frame (A1) & (A2).

5.1 First unzip the cover of the Loveseat and Chaise Back Frame (A1) & (A2).

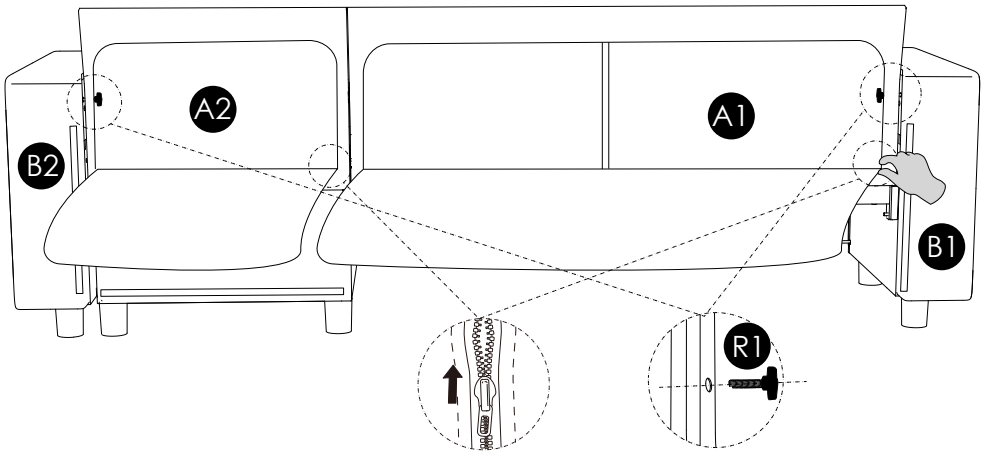

5.2 First attach the Backrest Frame (A1) & (A2) to the Armrest (B1) & (B2) , then attach the Backrest Frame to the Chaise and Loveseat Base, using T Bolt (R1). Do Not tighten them first, once all the bolts are in place, then fully tighten them.

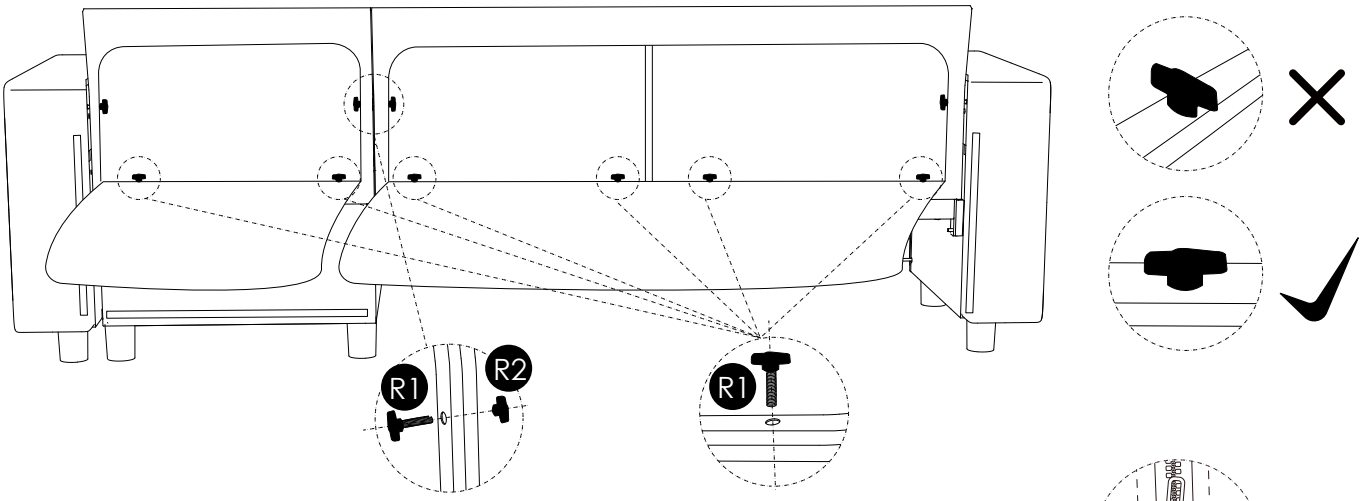

5.3 Zip up the Backrest cover.

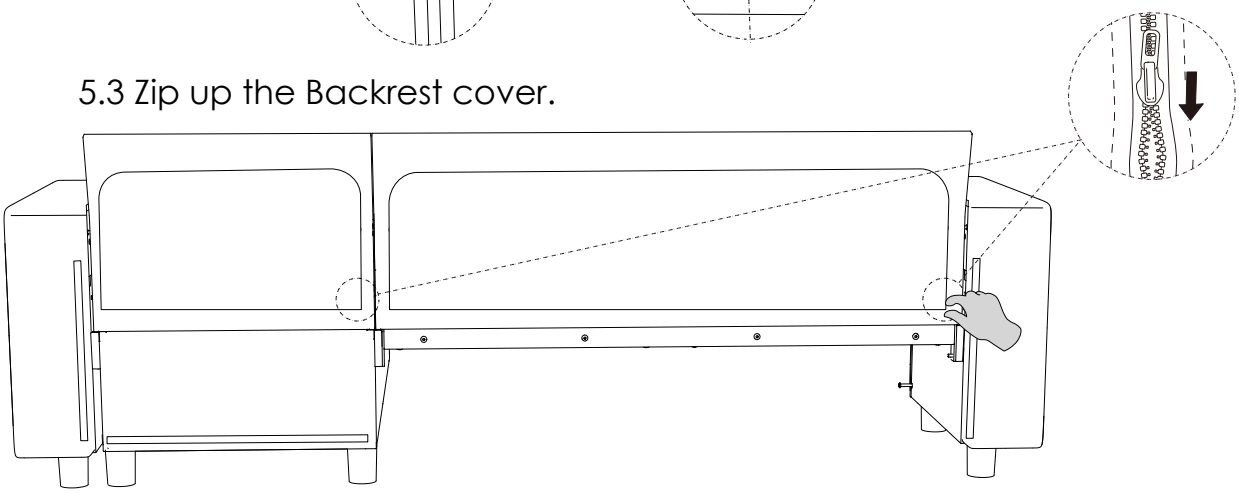

6 Tear off the Velcro strips from the backrest frame and armrests, then attach the Back Frame Cover (S).

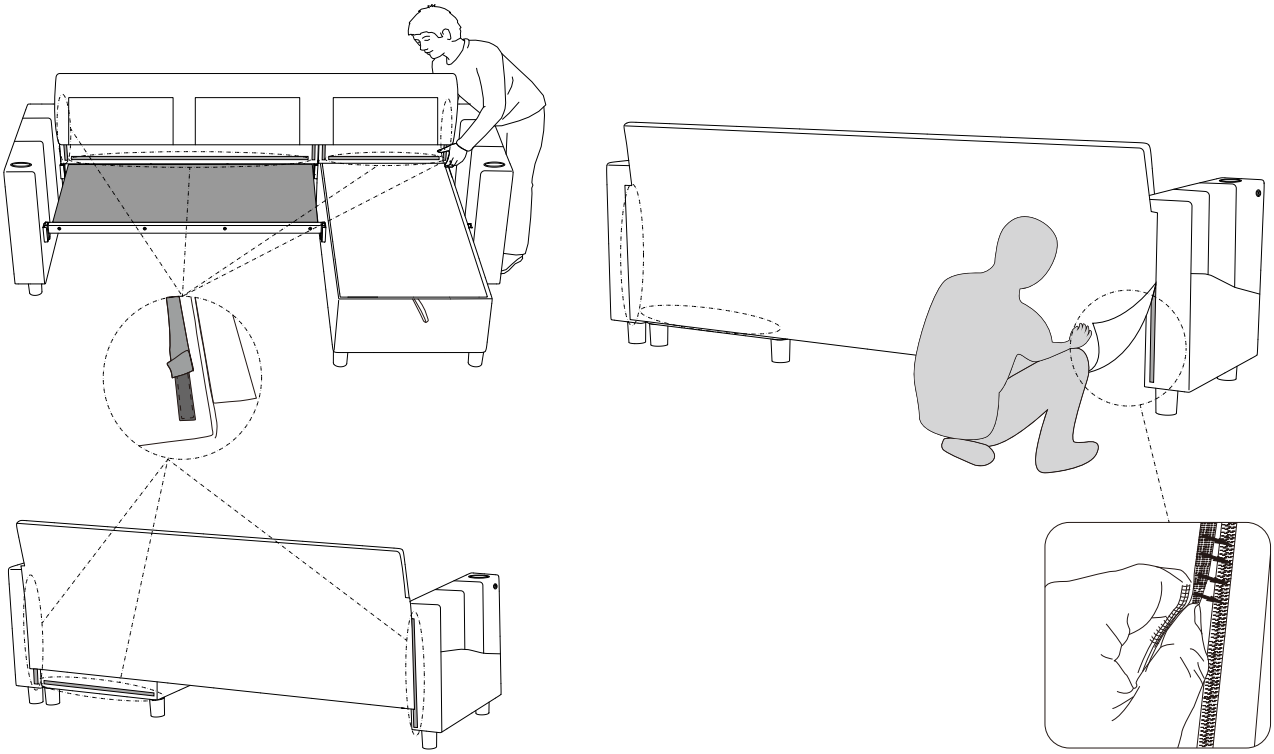

7 Attach the Pull-out Slide Rail (F1) & (F2) to the Pull-out Bed Frame (G), using Bolt (M).

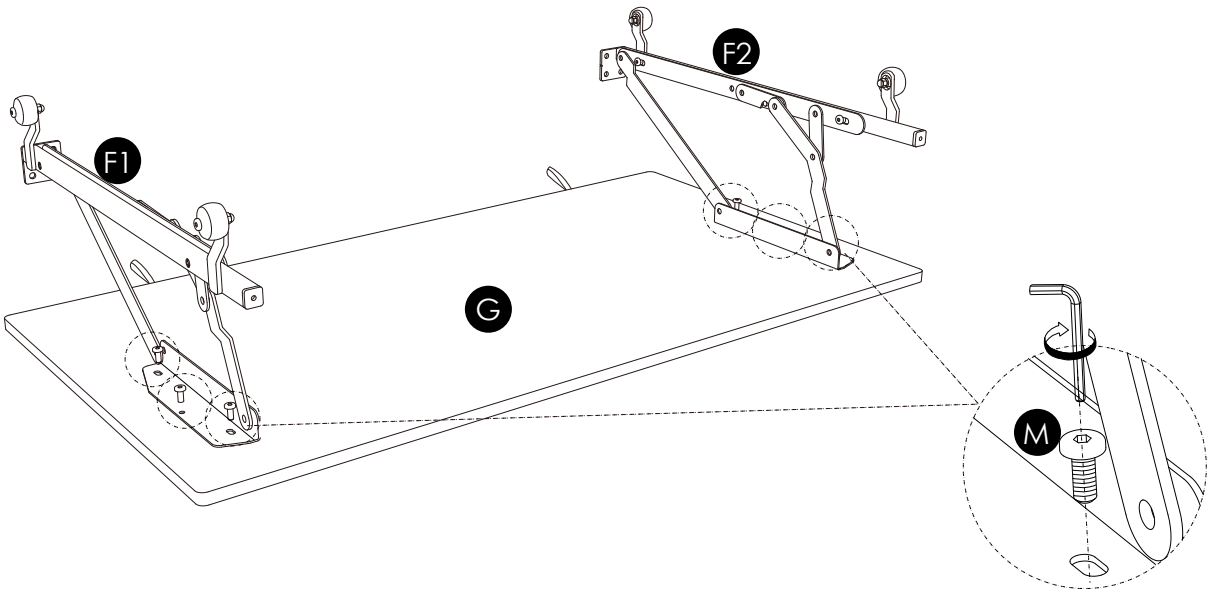

8 Attach the Pull-out Bed Back Rail (I) to the Pull-out Bed Slide Rail (F1) & (F2), using Bolt (N).

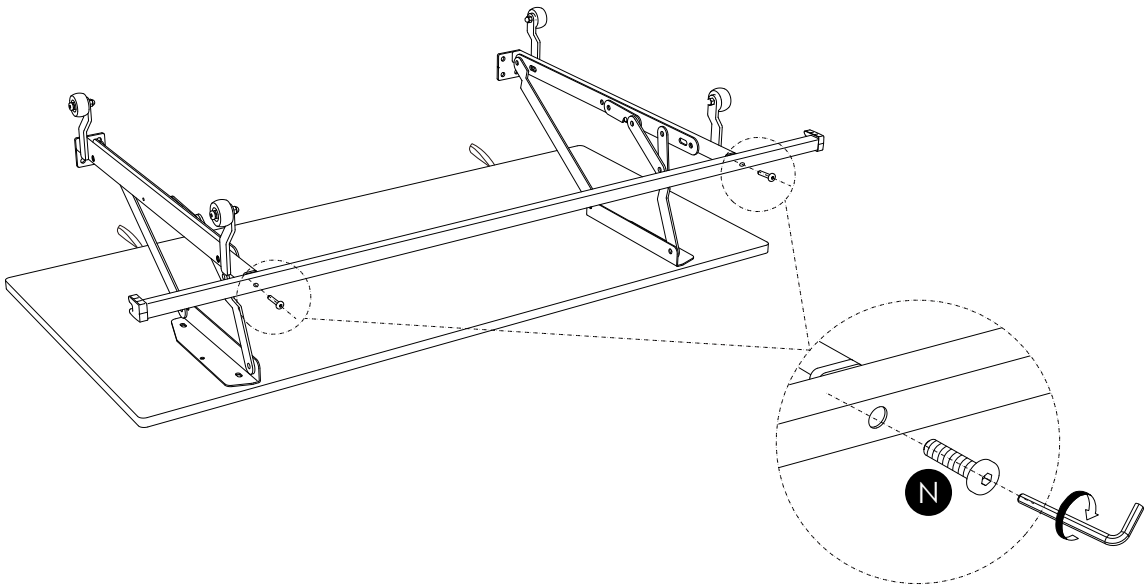

9 Attach the Pull-out Bed Front Panel Component (H) to the Metal Slide Rail (F1) & (F2).

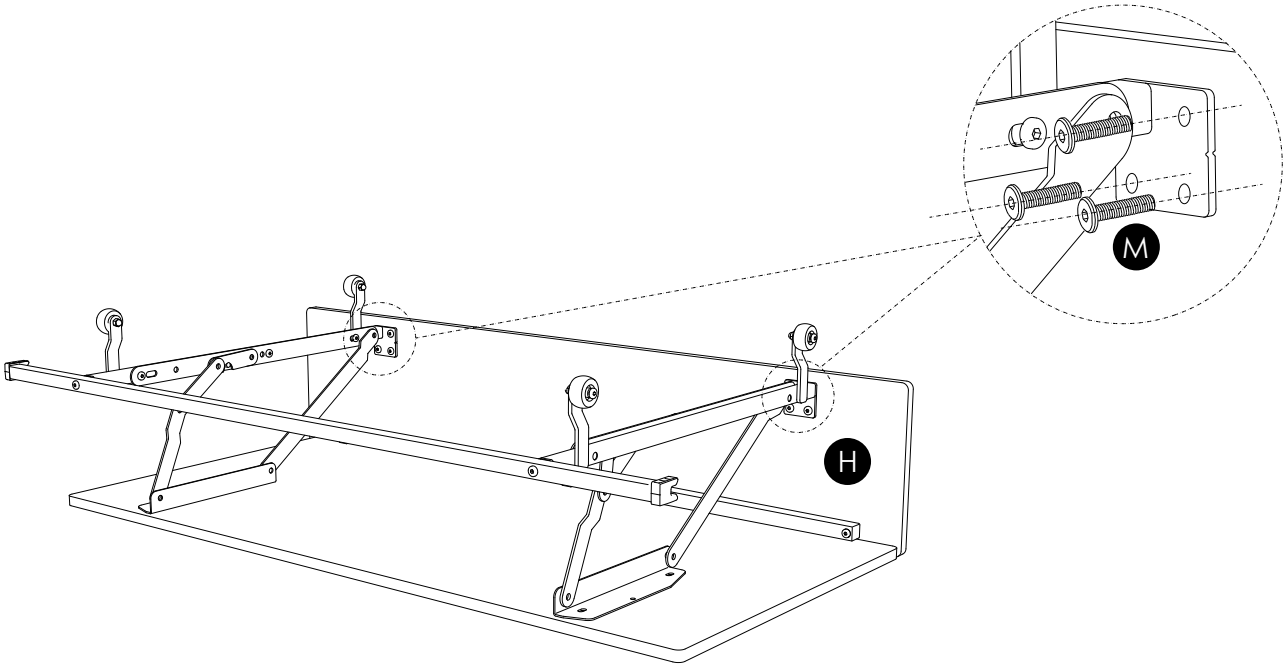

10

10.1 Tear off the Velcro stripes on the Loveseat Cushion(J2) & Chaise Seat Cushion (J3), then attach all the Seat Cushions and Back Cushions in position.

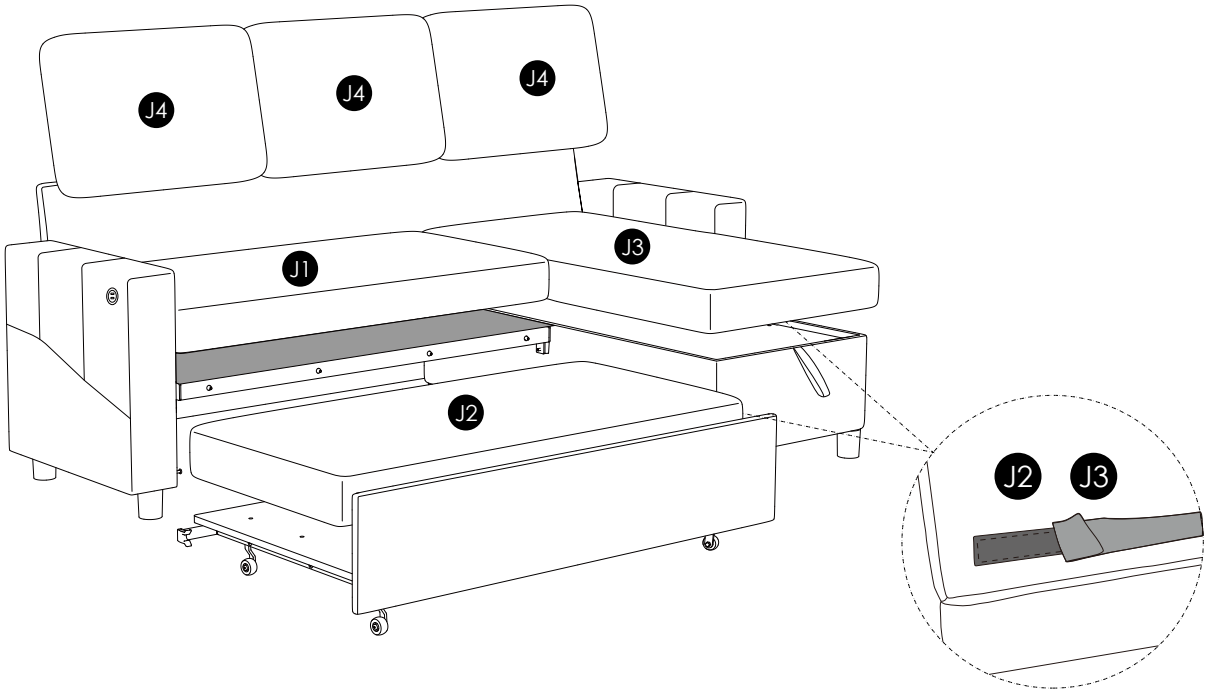

10.2 Hang on the Pull-out Bed Back Rail (I) to the Bolt (O).

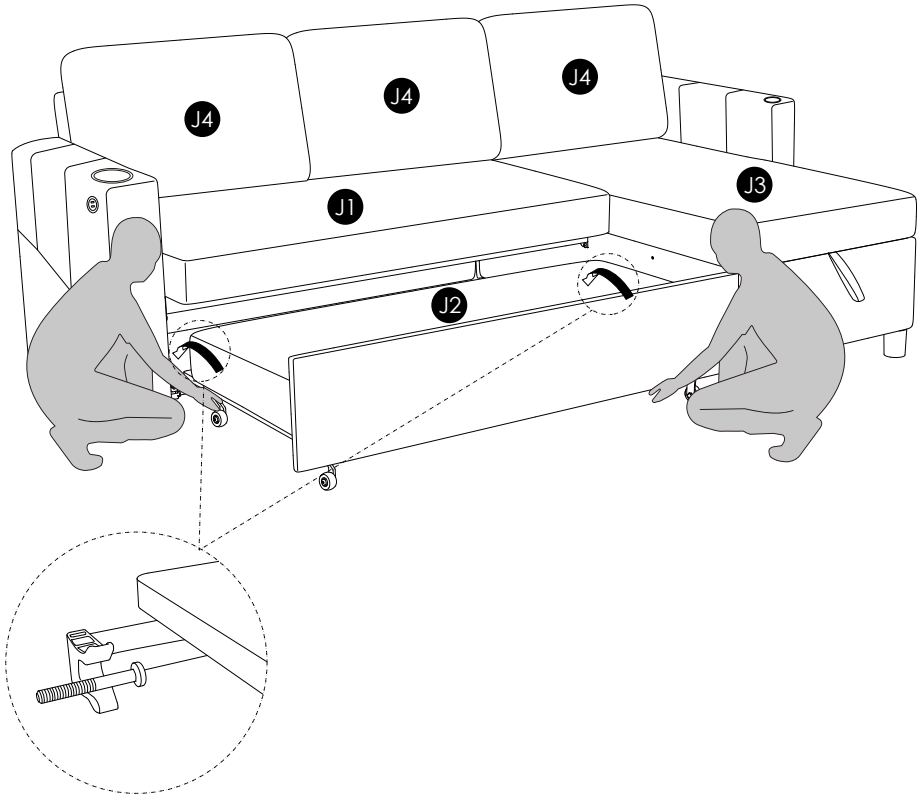

11 Connect the power cord, and assembly is completed. It's ready to use.

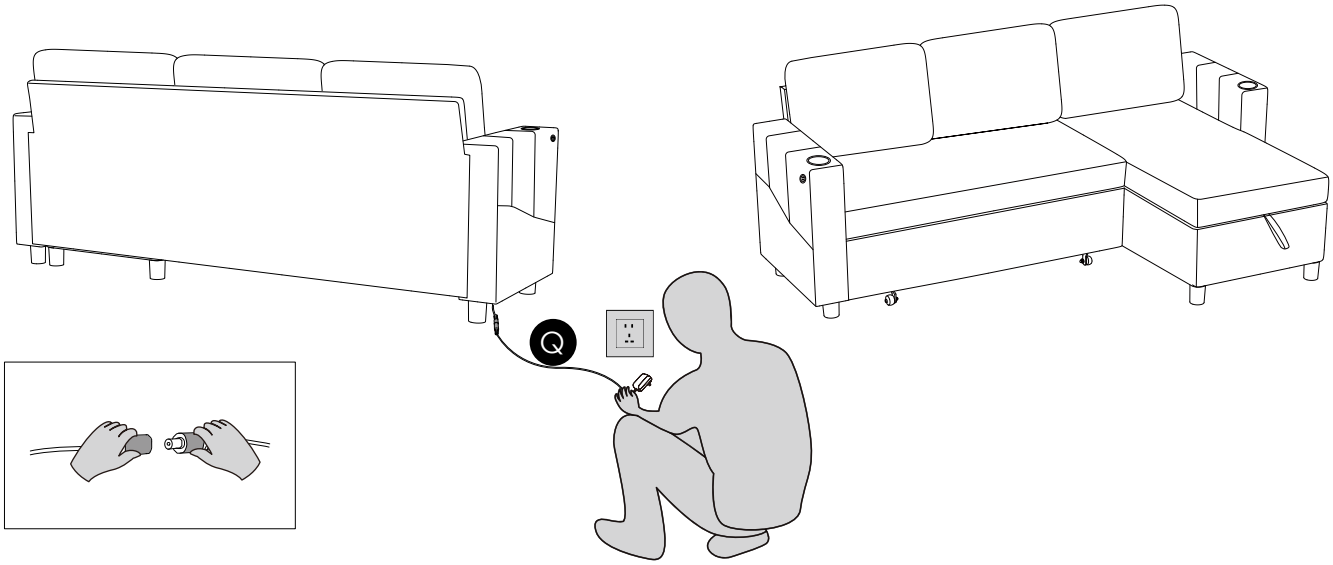

12 The assembly diagram for the left facing chaise is as follows, Bolt(O) should be installed on the Right Armrest(B2) & Chaise right side,Connectors K1&K2 are installed as showing below, other assembly steps remain the same.

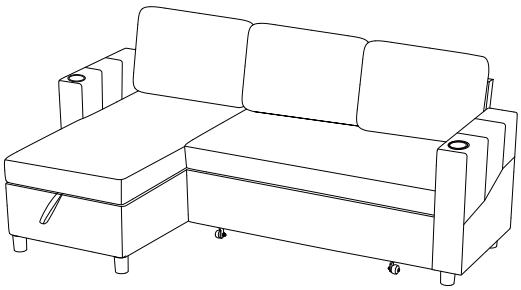

Top view of Connectors assembly

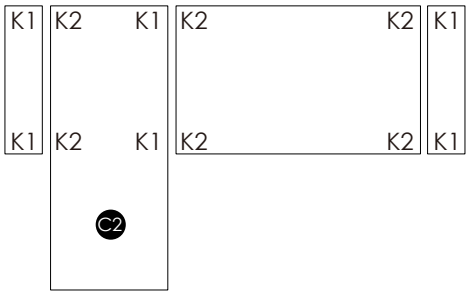

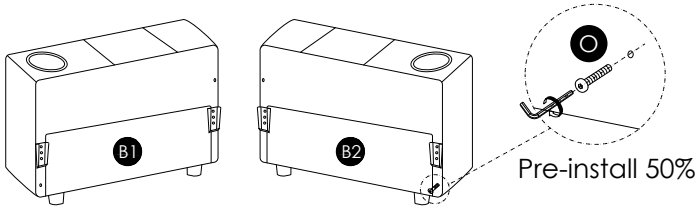

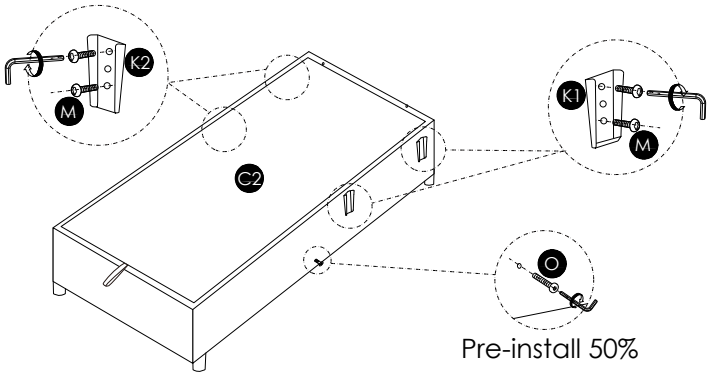

13 The seat cushion and back cushion of this product are vaccum-packaged for effcient shipping, whcih may result in a thinner apperance and fabric wrinkles upon arrival. To ensure optimal use, please follow below steps before using this item.

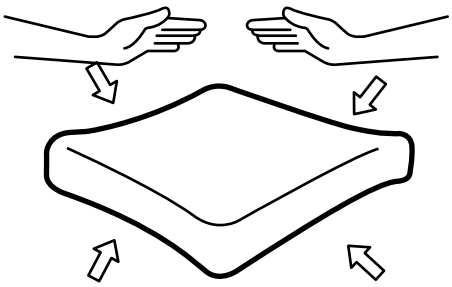

01

Due to package compression for better shipment ,the fabric may have wrinkles ,these wrinkles wil gradually disappear.

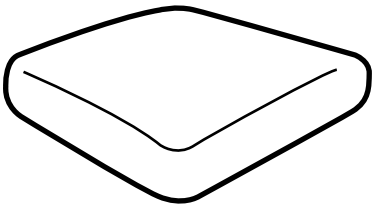

02

Please be patient and wait for the cushions to return to its fluffy state, which may take 48 to 72 hours.

Wait for 48-72 hours

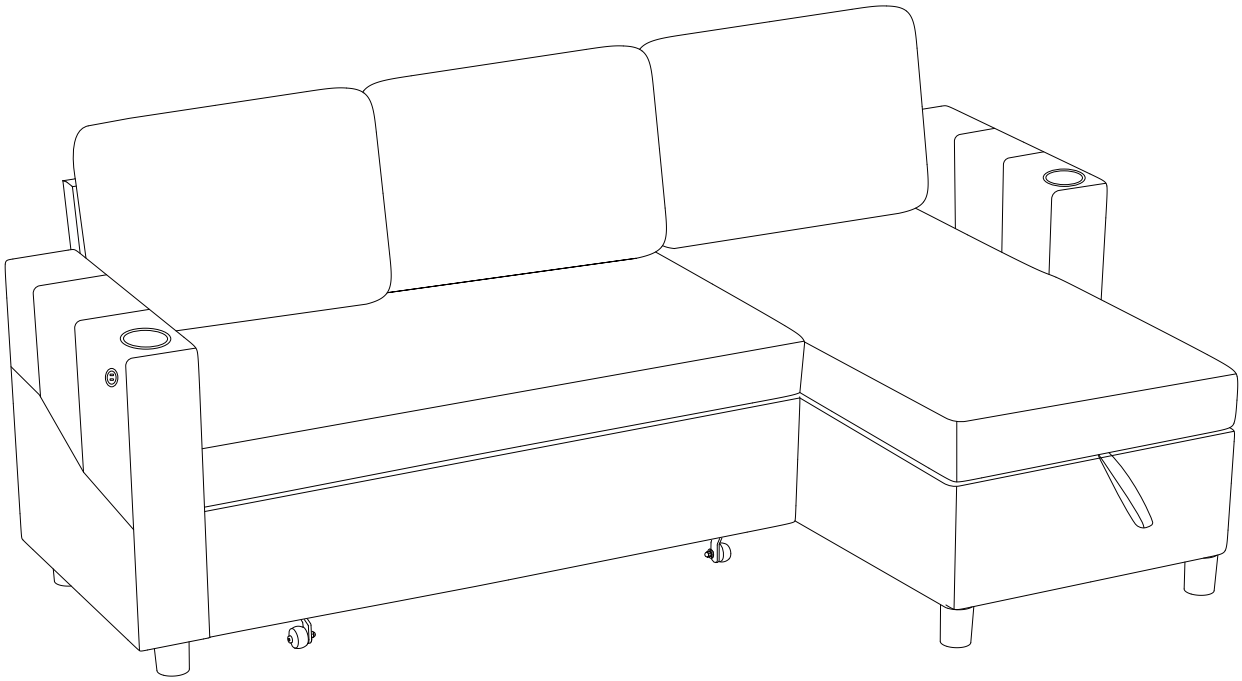

Design Exquisite Furniture For Your Home

PRODUCT WARRANTY

- ☒ 1-year limited on cover against splitting, peeling, and/or tearing.
- ☒ 1-year limited on internal and external frame structure.
- ☒ 1-year limited on cushioning material, seat springs and mechanism.

Contact us:

We make all efforts to guarantee that the products you receive are in excellent condition. If there are any parts missing or damaged, the Customer Service Team will be happy to provide free replacements for you. We have professional warehouses where the current inventory of parts is enough so that they will arrive in your hands as fast as possible. Assistance with assembly or product details is available; don't hesitate to get in touch with us to get priority service.