Assembly Instructions

CAUTION: You must read this before you proceed.

Please look in the Leg Panel for hardware packs

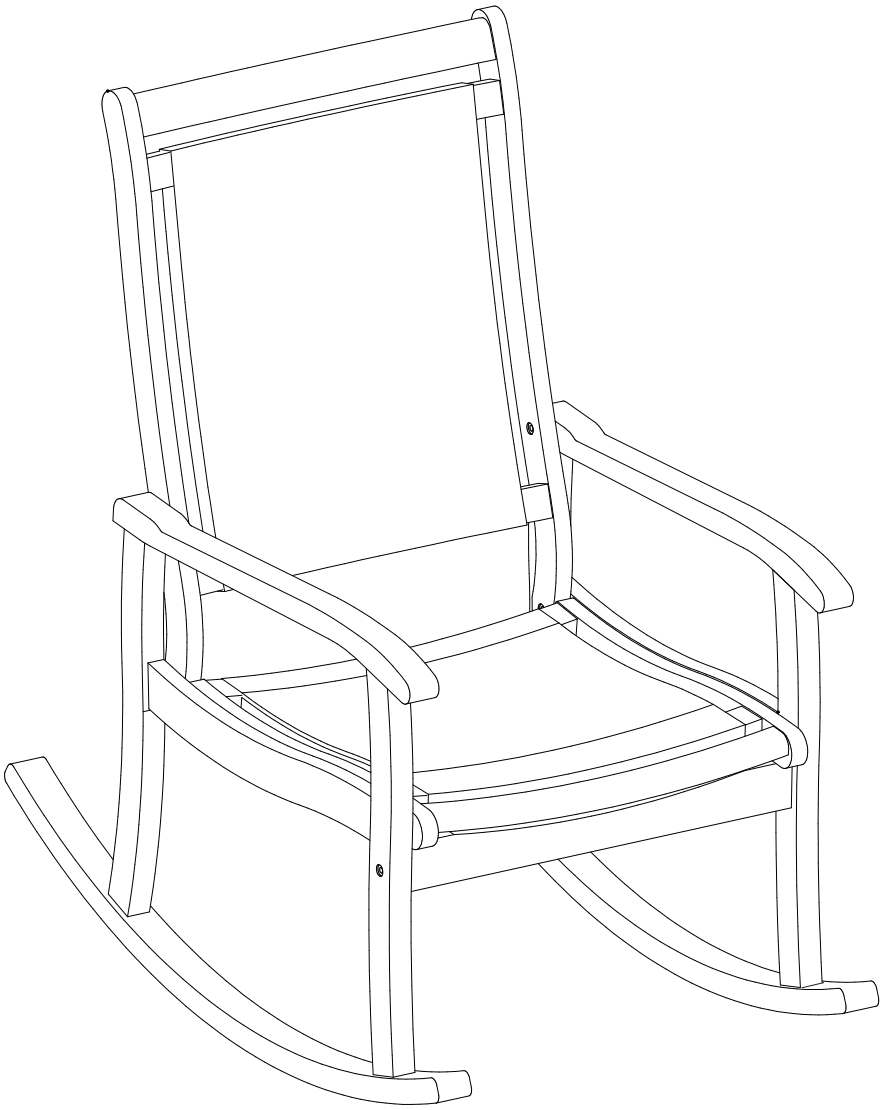

CAUTION: This Chair is NOT a TOY.
Keep your child/children at bay during the assembly process.
Whenever lifting the Chair and to prevent damage to the Chair two adults are needed to execute this action.

Parts List

No.	Picture	Description	Qty
A	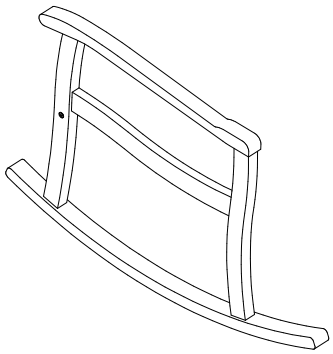	Right Leg Panel	1
B	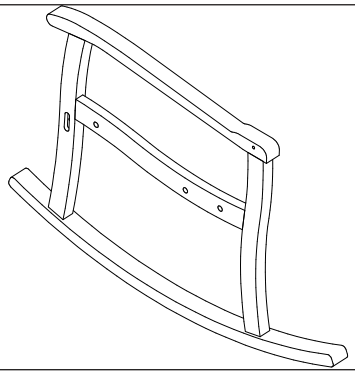	Left Leg Panel	1
C	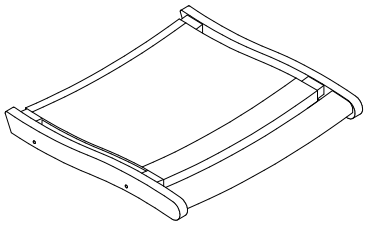	Seat Panel	1
D	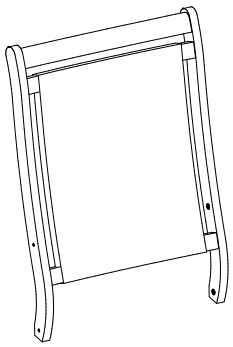	Backrest Panel	1
E	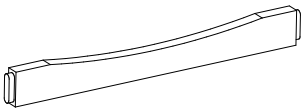	Front Leg Connection	1

Hardware

Chair Hardware

No.	Picture	Description	Qty
①	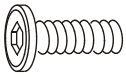	Bolt M6 x 35mm	9
②		Screw M6 x 70mm	3
③	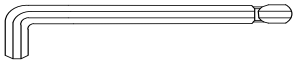	Allen Key	1

Assembly Preparation

Before Beginning Assembly:

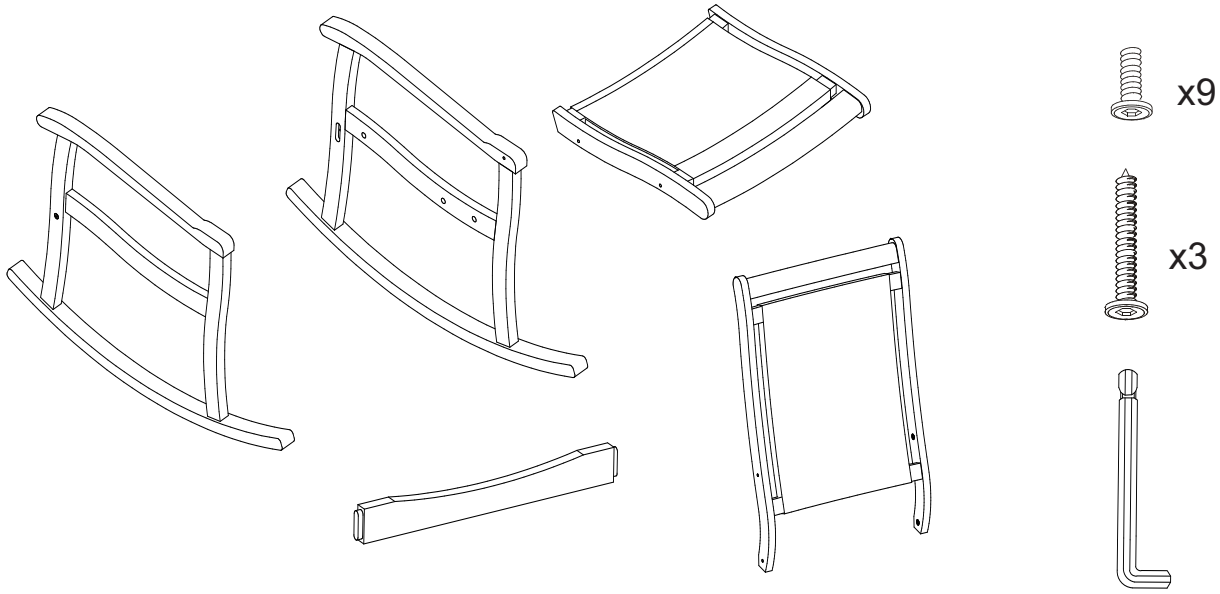

☒ Read instructions, cover to cover.

☒ Have 2 adults on hand for assembly.

☒ Do not assemble on flooring or carpet.

☒ Assemble on a clean non-marring surface (packing foam).

☒ Save all packaging until finished.

Assembly Steps

OVERVIEW

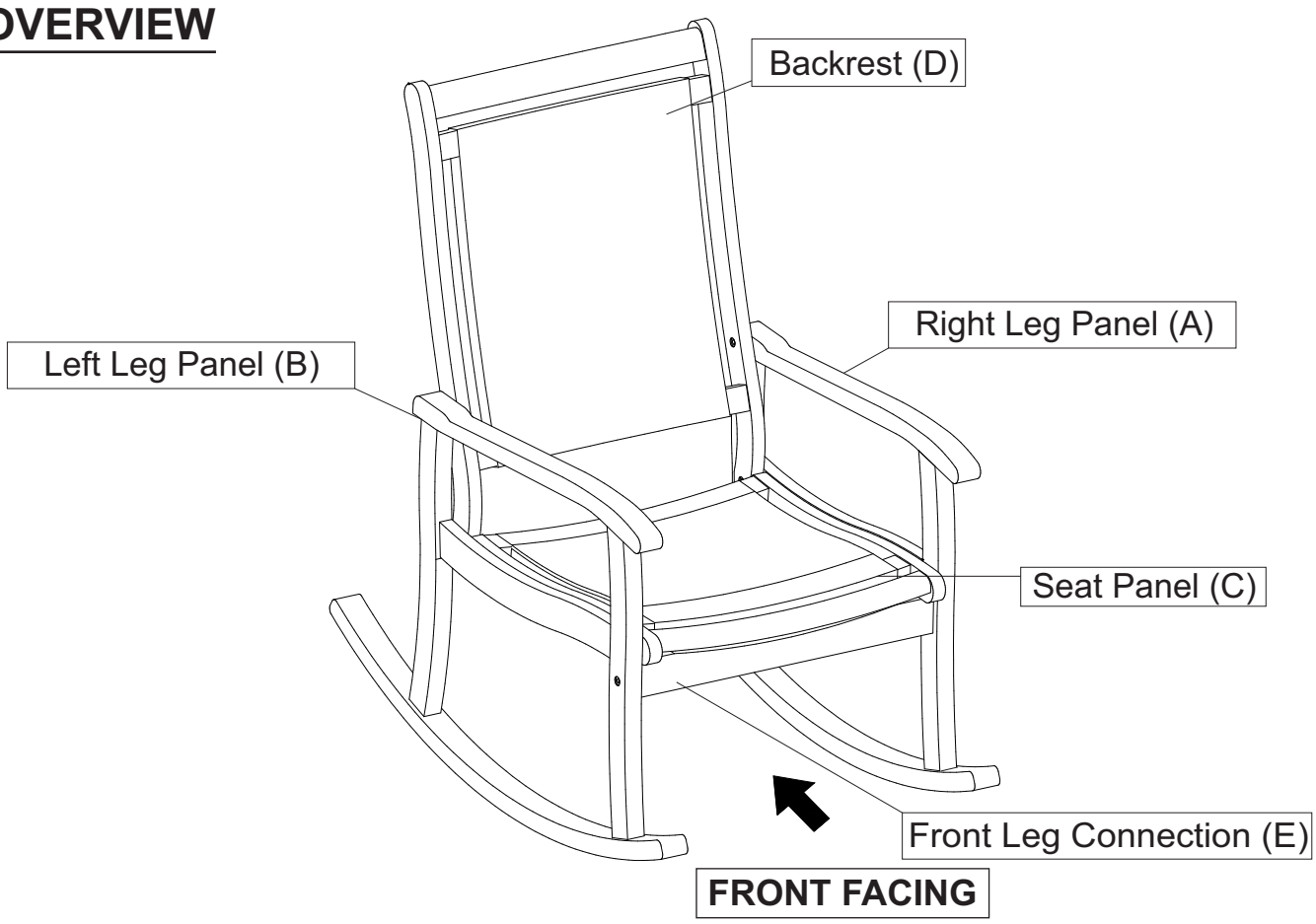

This Rocking Chair has multiple parts and may require up to 30 minutes to assemble. To give you an overview of the Rocking Chair parts, the above picture is to help you put the various parts into perspective. Please read through the instructions below to familiarise yourself with the parts and steps before assembly.

Step 1

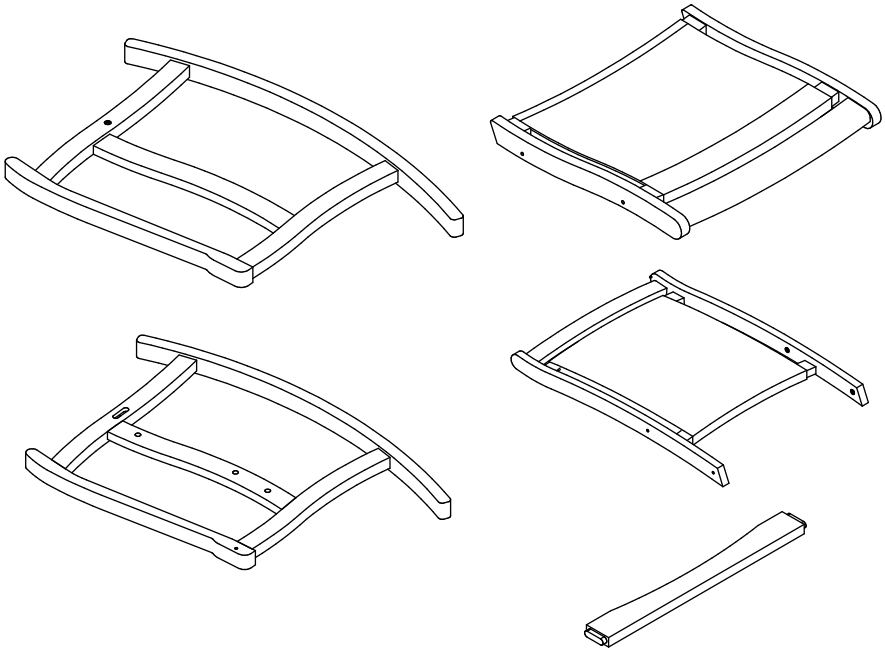

Unpack and place all parts on a clean, non-marring surface.

Assembly Steps

Step 2

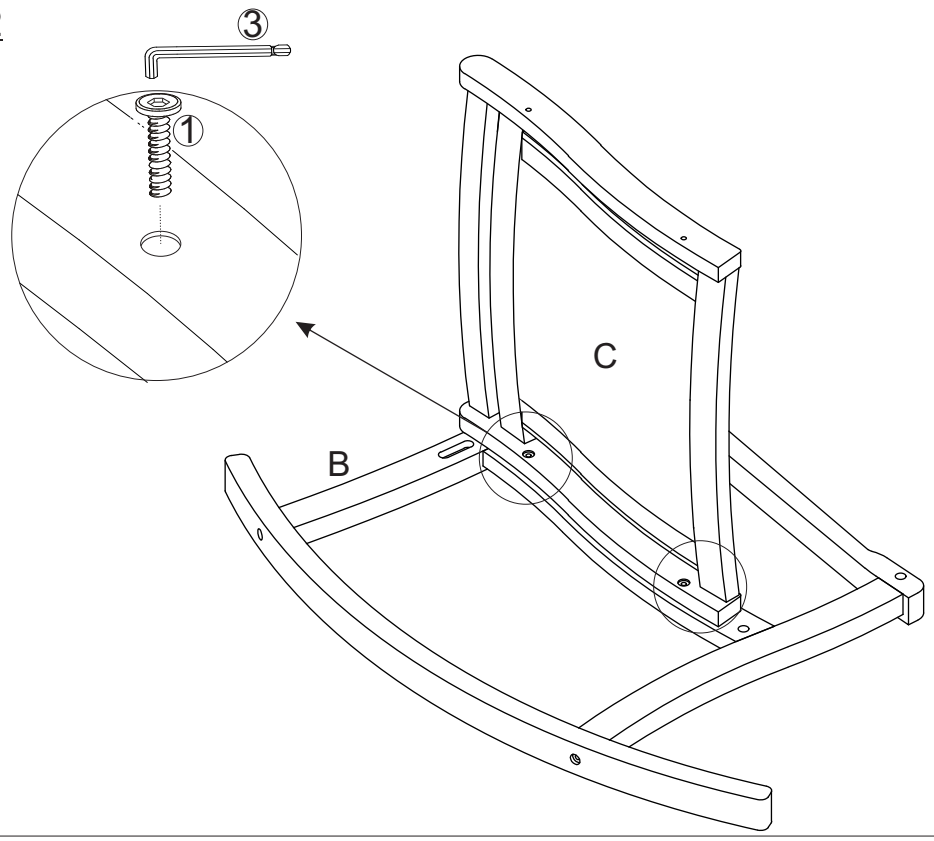

Place the Left Leg Panel (B) on a clean, non-marring surface
Attach the Seat Panel (C) to the Left Leg Panel (B) using Bolts(①),and the Allen Key (③) as shown above.
Do not fully tighten the Bolts.

Step 3

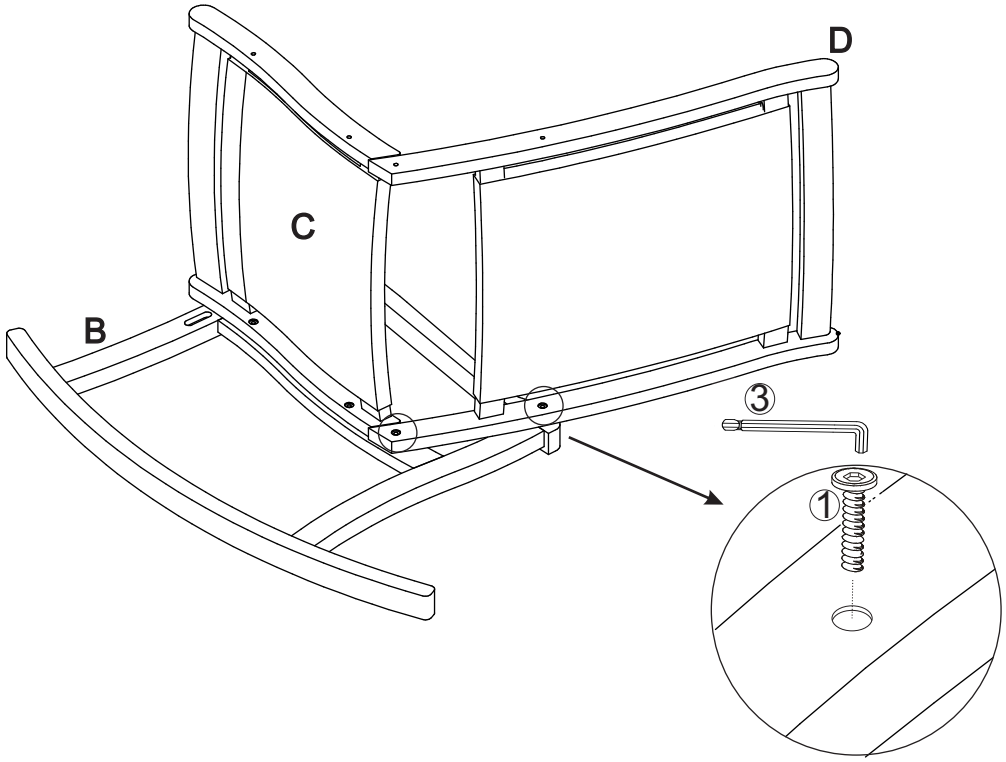

Attach the Backrest Panel (D) to the assembled piece in step 2 using Bolts(①),and the Allen Key (③) as shown above.
Do not fully tighten the Bolts.

Step 4

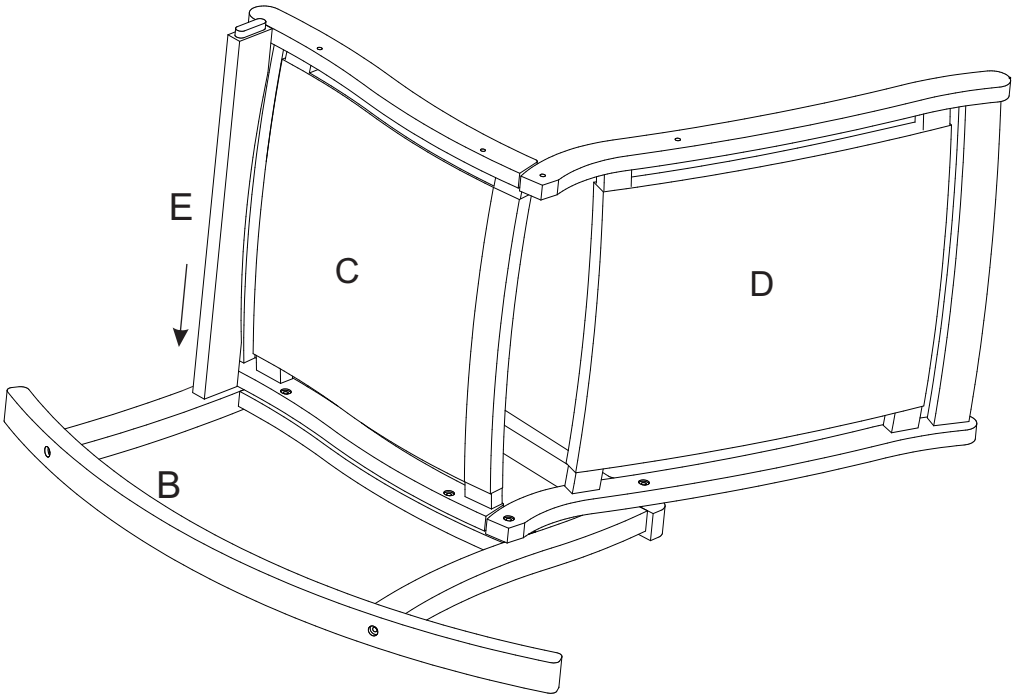

Put the Front Leg Connection (E) onto the Left Leg Panel (B) in the direction of the arrow as shown in above picture.
Note: The curved side is fixed to the seat panel

Step 5

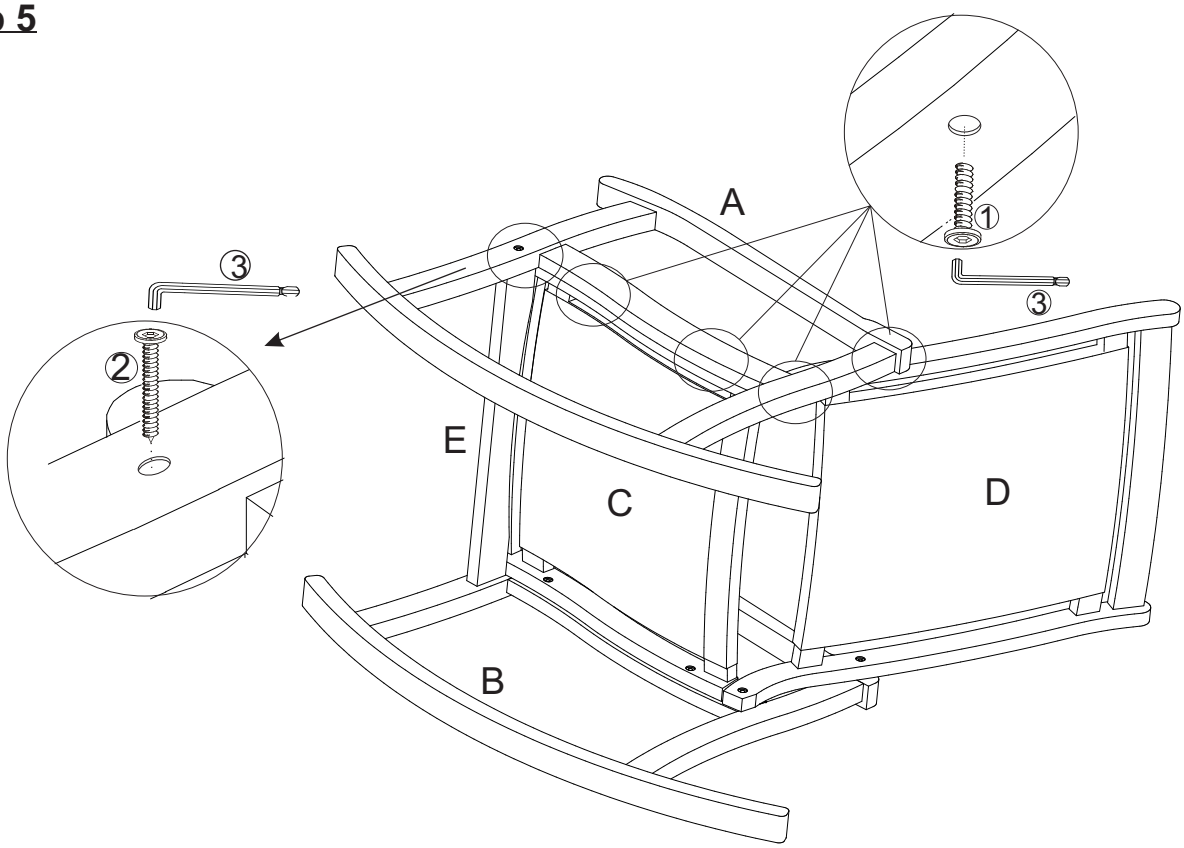

Attach the Right Leg Panel (A) to the Front Leg Connection (E) using Screws(②) and the Allen Key (③).Attach the Right Leg Panel (A) to the Seat Panel (C) and the Backrest Panel (D) using Bolts (①) the and Allen Key (③)
Do not fully tighten the Screws and Bolts.

Step 6

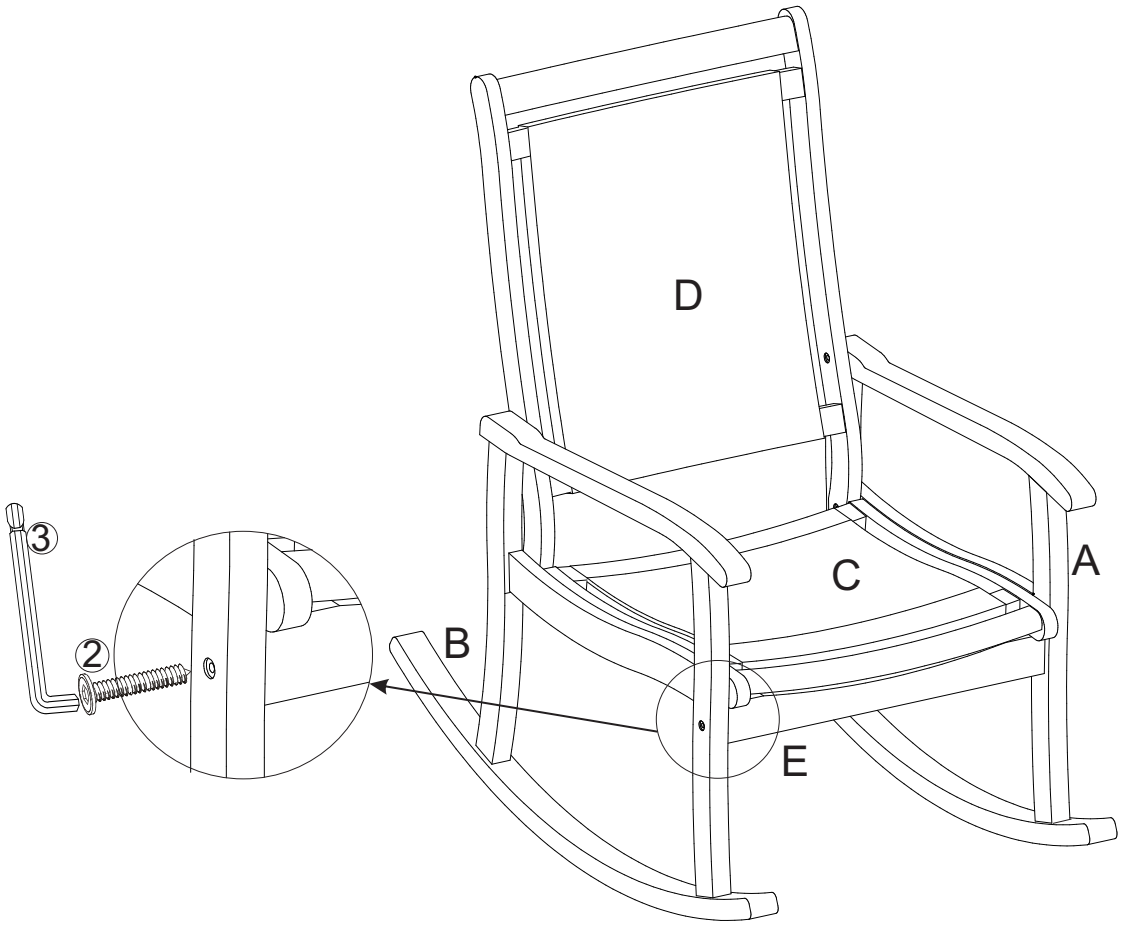

Secure the Left Leg Panel (B) to the Front Leg Connection (E) using Screws (②) and the Allen Key (③)
Do not fully tighten the Screw.

Step 7

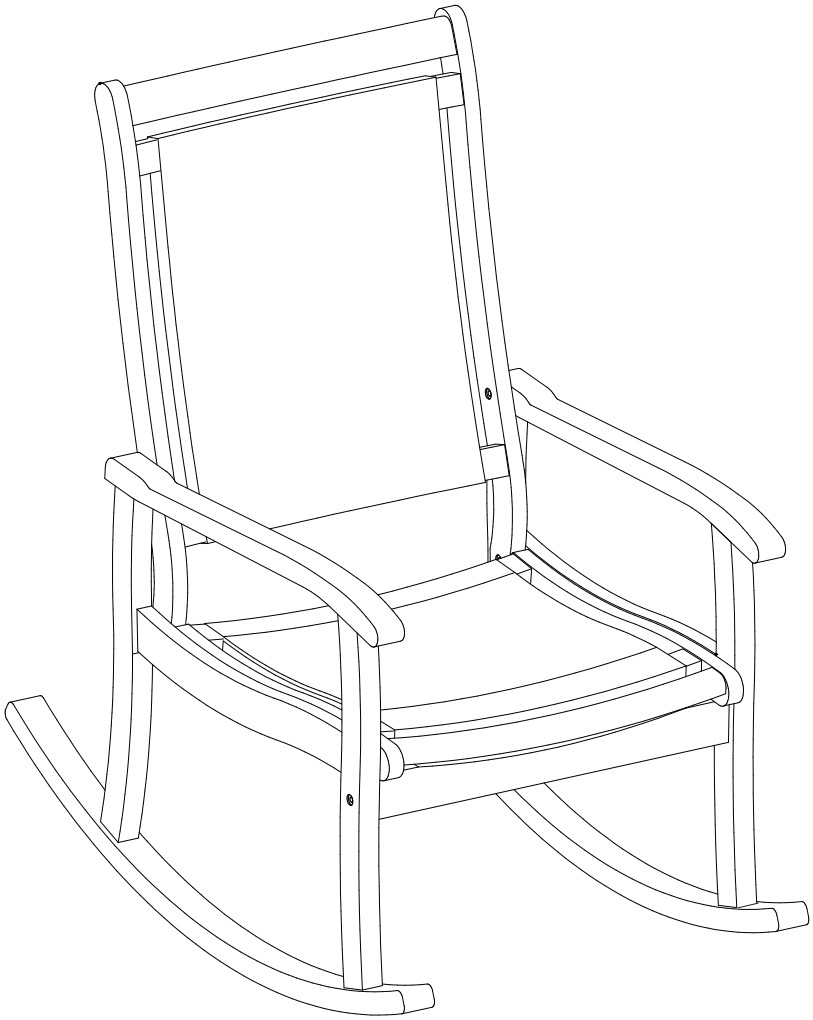

Exert pressure floorwards, onto the Chair with both your hands.
This pressure will help the Legs and Chair reach full alignment status.
Check for wobbles on a LEVEL surface.
If no wobbles are found proceed to tighten Bolts and screws in a sequential manner, until evenly secured.
When tightening Bolts and screws tighten sequentially.
Do not tighten any Bolt or screw fully and then move on towards the next one.
If there are still wobbles, loosen Bolts and screws and execute the same above process.
Your Rocking Chair is ready for use.
This Rocking Chair can only be used on a flat, level surface.

Care &Maintenance

- Do not put hot items directly on furniture surface
- Do not clean furniture with harsh cleansers or polish.
- To obtain the longest lifespan of your outdoor prodcts, minimizing exposure to direct sunlight is recommended.
- Children should not climb or jump on the furniture.
- Do not write on furniture without a padded barrier to protect the surface.
- To obtain the longest lifespan of your outdoor products, avoid extended and lengthy exposure to rain, snow, and direct sunshine. Whenever possible cover the product and /or place under patio or awnings.
- Not for commercial use. For residential use only .
- Stains may be removed with mild soap solution and damp cloth.
- Keep away from sources of ignition.

- Dust and pick-up spills using a clean, non-colored, lint-free cloth.

Questions & Answers about Proposition 65

- What is Proposition 65?

  Proposition 65 requires businesses to provide warnings to Californians about significant exposures to chemicals that cause cancer, birth defects or other reproductive harm. These chemicals can be in the products that Californians purchase, in their homes or workplaces, or that are released into the environment. By requiring that this information be provided, Proposition 65 enables Californians to make informed decisions about their exposures to these chemicals.

  Proposition 65 also prohibits California businesses from knowingly discharging significant amounts of listed chemicals into sources of drinking water.

  Proposition 65 requires California to publish a list of chemicals known to cause cancer, birth defects or other reproductive harm. This list, which must be updated at least once a year, has grown to include approximately 900 chemicals since it was first published in 1987.

- What types of chemicals are on the Proposition 65 list?

  The list contains a wide range of naturally occurring and synthetic chemicals that include additives or ingredients in pesticides, common household products, food, drugs, dyes, or solvents. Listed chemicals may also be used in manufacturing and construction, or they may be byproducts of chemical processes, such as motor vehicle exhaust.

- What does a warning mean?

  If a warning is placed on a product label or posted or distributed at a workplace, a business, or in rental housing, the business issuing the warning is aware or believes that it is exposing individuals to one or more listed chemicals.

  By law, a warning must be given for listed chemicals unless the exposure is low enough to pose no significant risk of cancer or is significantly below levels observed to cause birth defects or other reproductive harm.