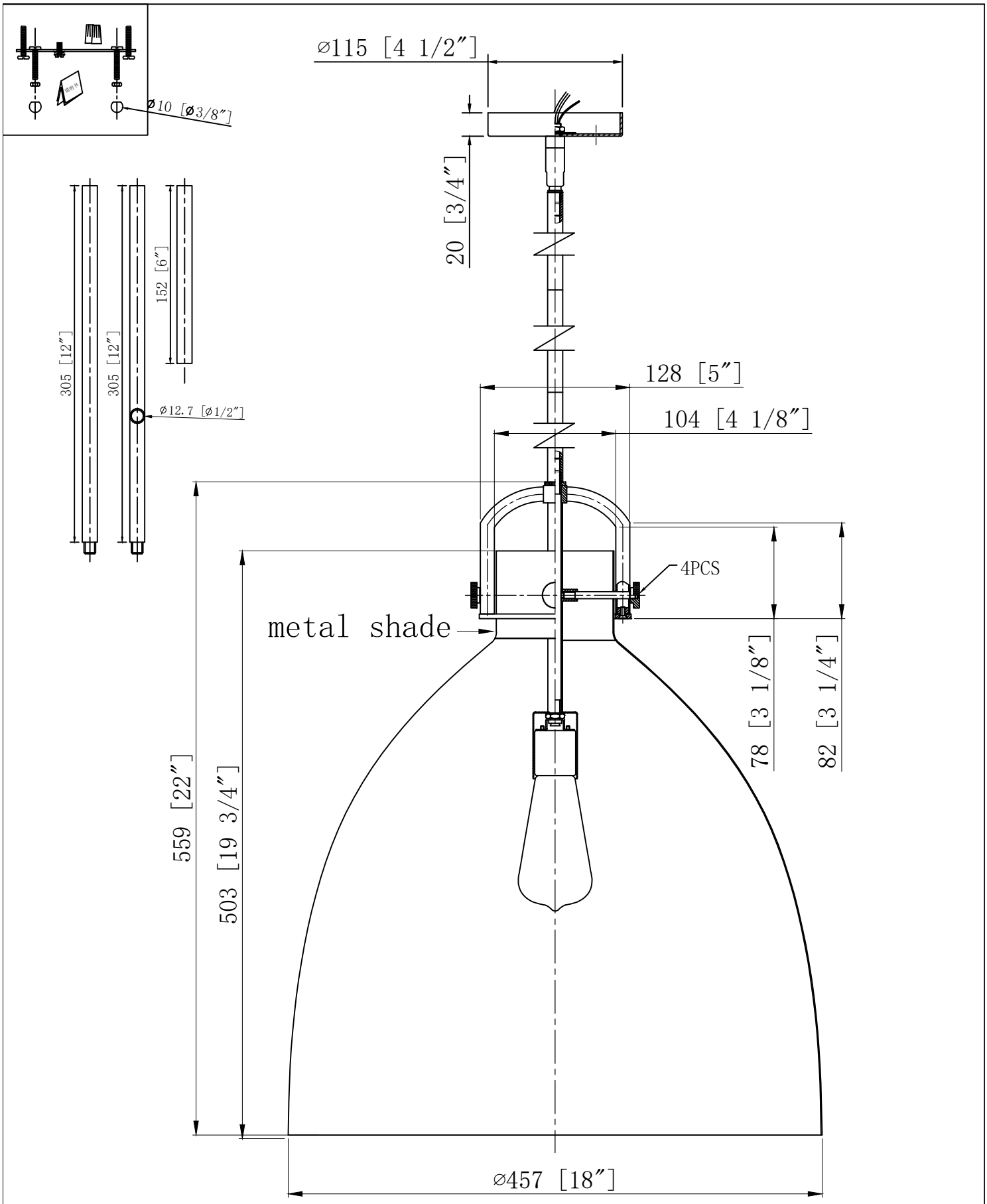

INNOVATIONS LIGHTING
DESIGN COPYRIGHT - 12/16/2020
ALL RIGHTS RESERVED AND MAY NOT BE DUPLICATED WITHOUT OUR WRITTEN PERMISSION

ITEM:712-1S-18