Bunk BED
ASSEMBLY INSTRUCTIONS

Queen

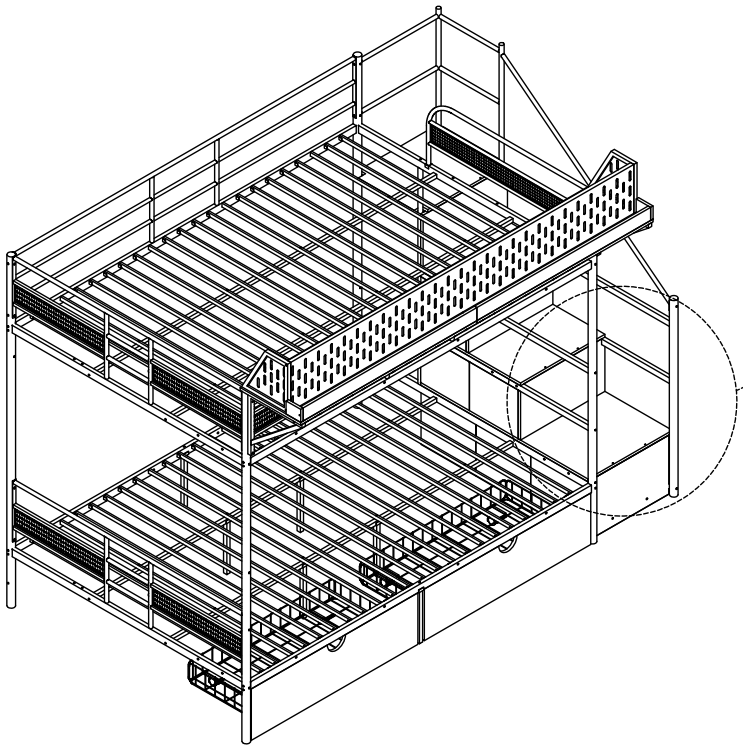

Assemble the staircase on the right side.

Attention

Please use the screws correctly according to the instructions. Thank you.

Bed parts view

A	x 26	B	x 22	C	x 27	D	x 52	E	x 24	F	x 7
 M5×40mm		 M6×10mm		 M6×30mm		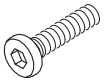 M6×45mm		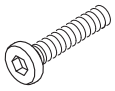 M6×50mm		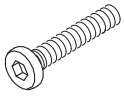 M6×60mm	
G	x 24	H	x 8	I	x 24	J	x 1	K	x 1	L	x 23
 M5×38 mm		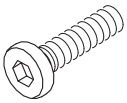 M8×40mm		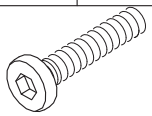 M8×60mm		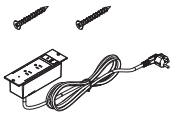					
M	x 4	N	x 2	O	x 2	P	x 4	Q	x 1	R	x 6
		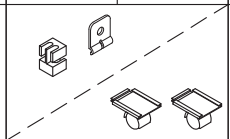		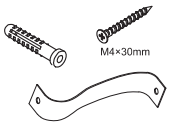 M4×30mm		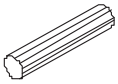		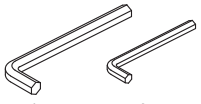 4 mm 3 mm		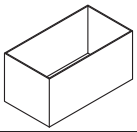	
S	x 6	T	x 1	U	x 4	V	x 2				
 M6×20mm		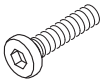 M6×35mm				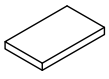					

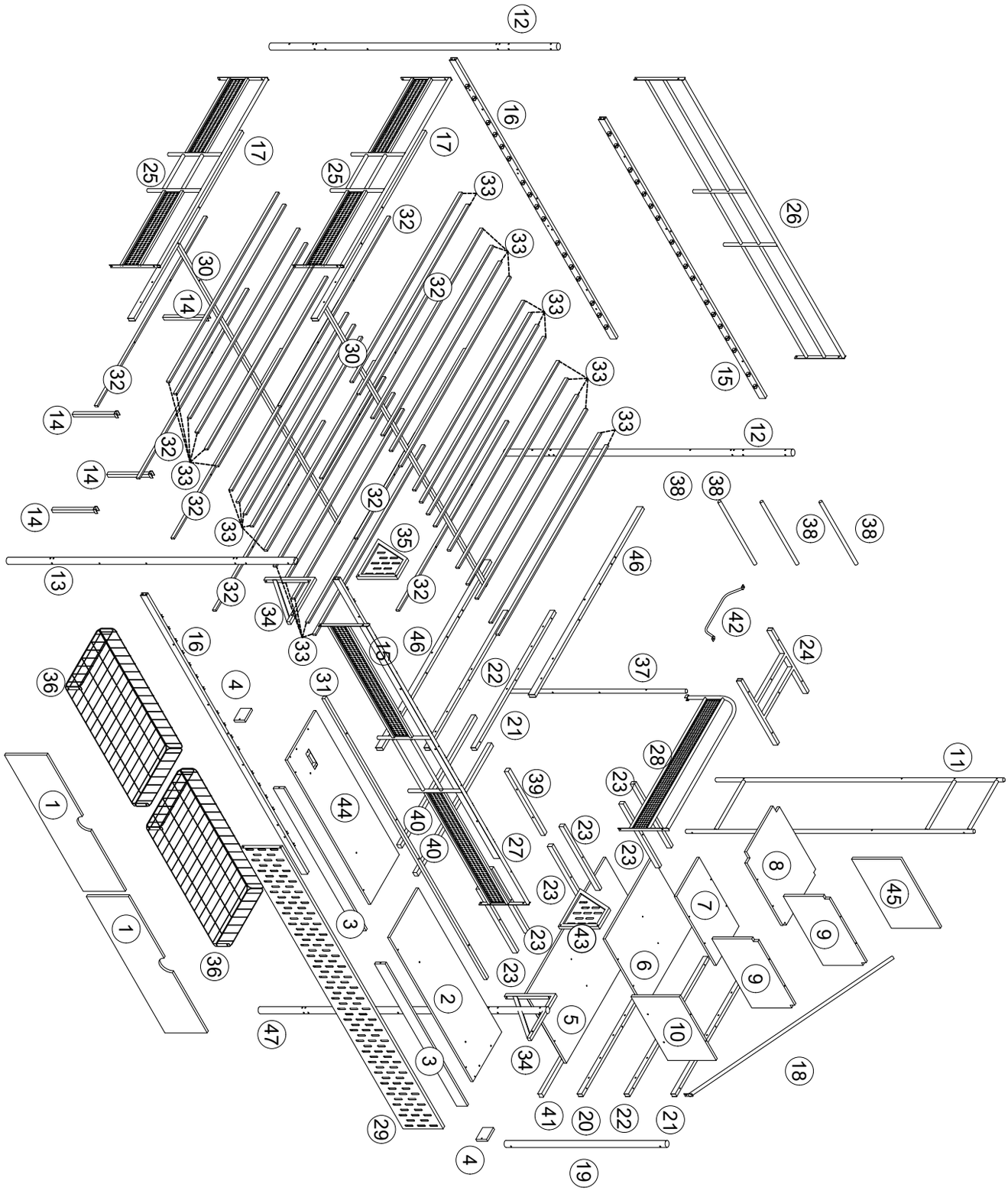
12
16
17
25
26
33
32
30
14
15
38
35
13
34
46
42
24
37
22
21
28
11
39
23
44
40
27
8
45
7
9
43
6
3
2
5
10
18
47
41
20
29
4
19
1
36

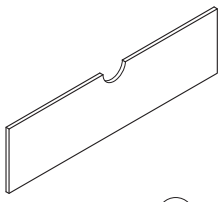 ① x 2	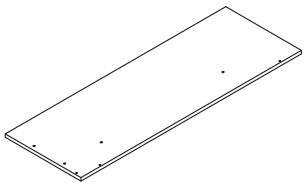 ② x 1	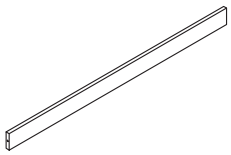 ③ x 2	 ④ x 2
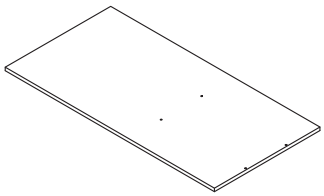 ⑤ x 1	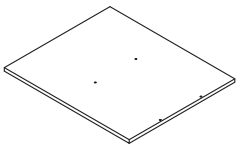 ⑥ x 1	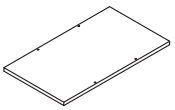 ⑦ x 1	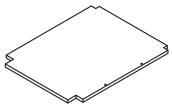 ⑧ x 1
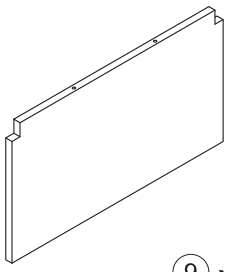 ⑨ x 2	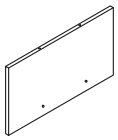 ⑩ x 1	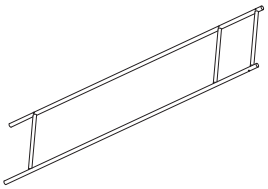 ⑪ x 1	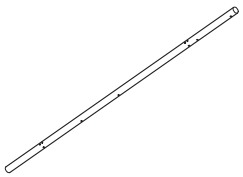 ⑫ x 2
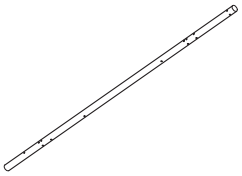 ⑬ x 1	 ⑭ x 6	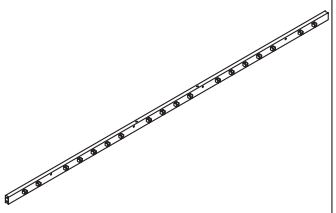 ⑮ x 2	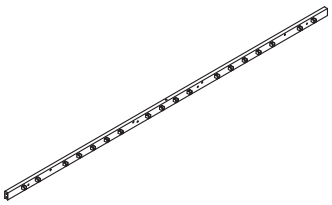 ⑯ x 2
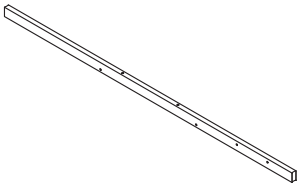 ⑰ x 2	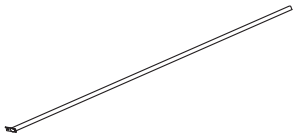 ⑱ x 1	 ⑲ x 1	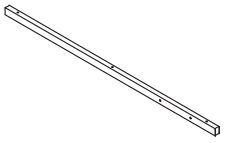 ⑳ x 1
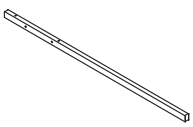 ㉑ x 2	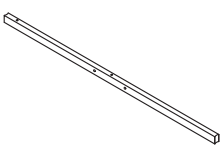 ㉒ x 2	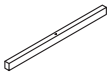 ㉓ x 6	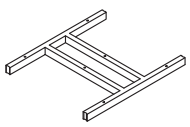 ㉔ x 1

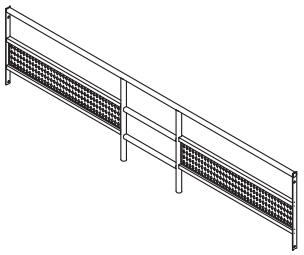 ㉕ x 2	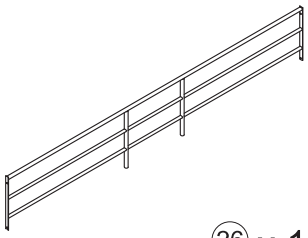 ㉖ x 1	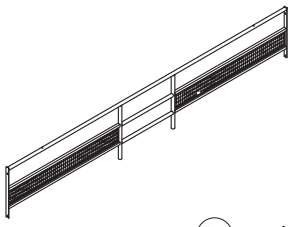 ㉗ x 1	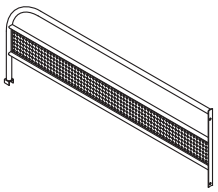 ㉘ x 1
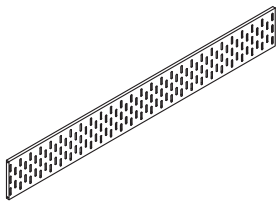 ㉙ x 1	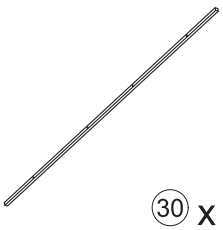 ㉚ x 4	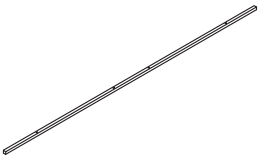 ㉛ x 1	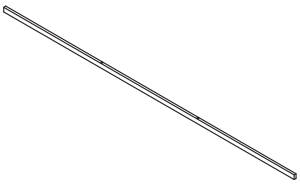 ㉜ x 8
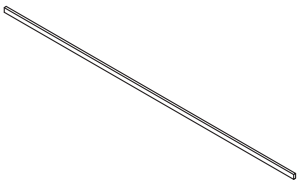 ㉝ x 36	 ㉞ x 2	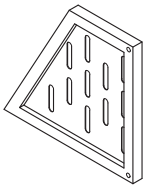 ㉟ x 1	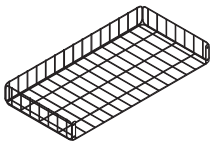 ㊱ x 2
㊲ x 1	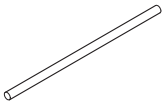 ㊳ x 3	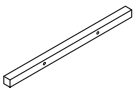 ㊴ x 1	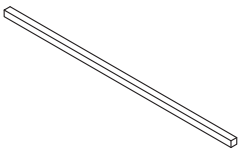 ㊵ x 2
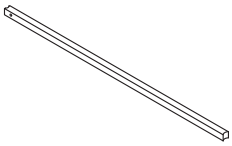 ㊶ x 1	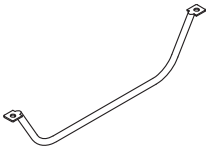 ㊷ x 1	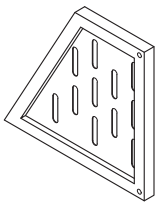 ㊸ x 1	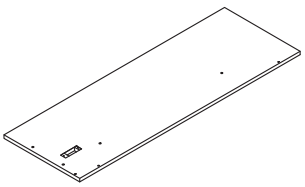 ㊹ x 1
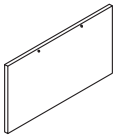 ㊺ x 1	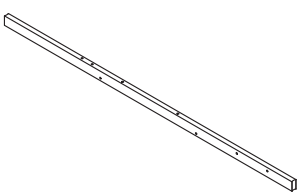 ㊻ x 2	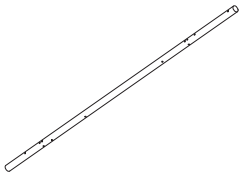 ㊼ x 1	

Step 1

Q	x 1	N	x 4	M	x 4	B	x 14
4 mm 3 mm						M6×10mm	

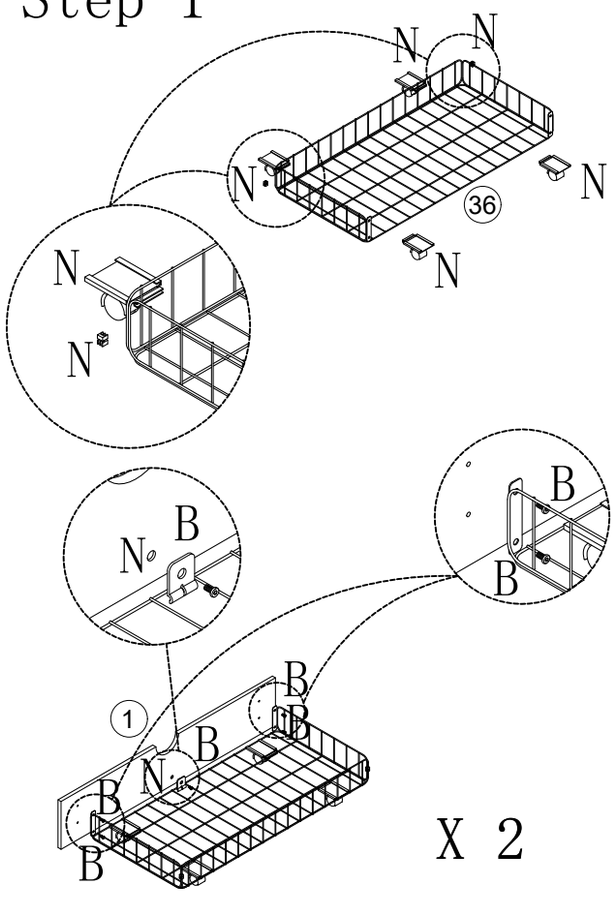

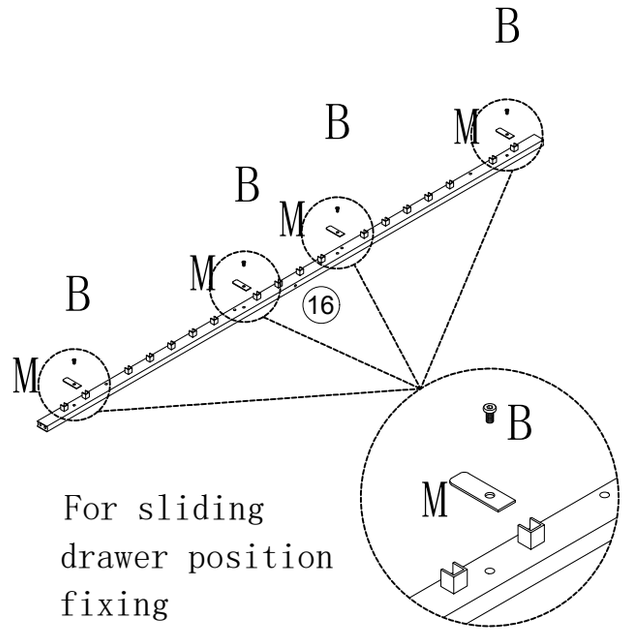

Step 2

Q	x 1	I	x 8
4 mm 3 mm		M8×60mm	

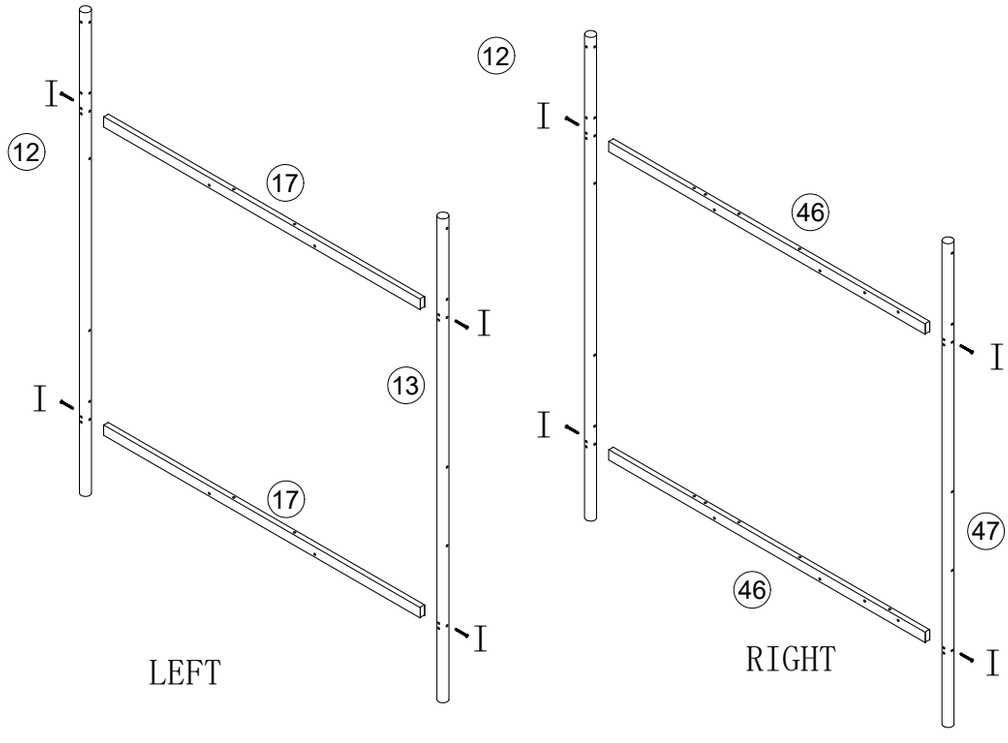

Step 3

L	x 8	F	x 2	E	x 11	D	x 2	C	x 4	B	x 2
		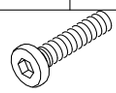	M6×60mm	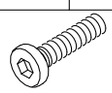	M6×50mm		M6×45mm		M6×30mm		M6×10mm

Q	x 1
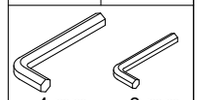	4 mm 3 mm

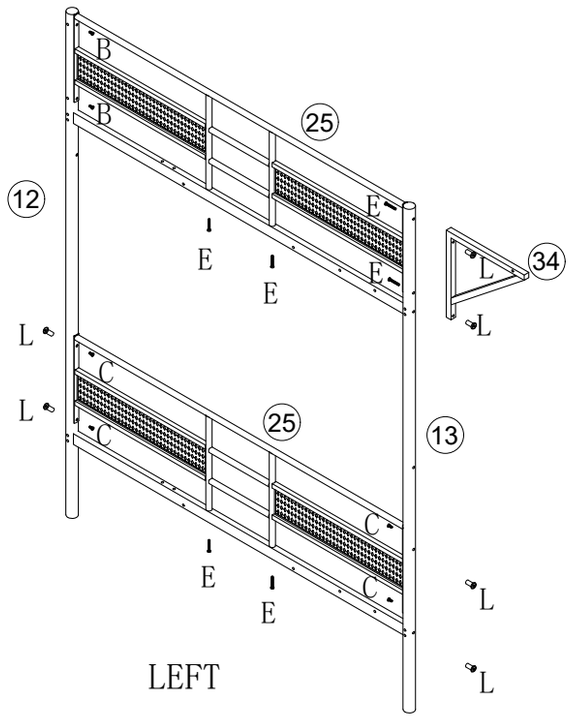

Step 4

Q	x 1	I	x 8	H	x 4	E	x 6	D	x 4
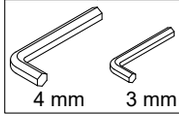	4 mm 3 mm	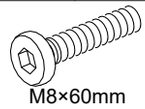	M8×60mm		M8×40mm	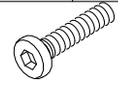	M6×50mm		M6×45mm

LEFT

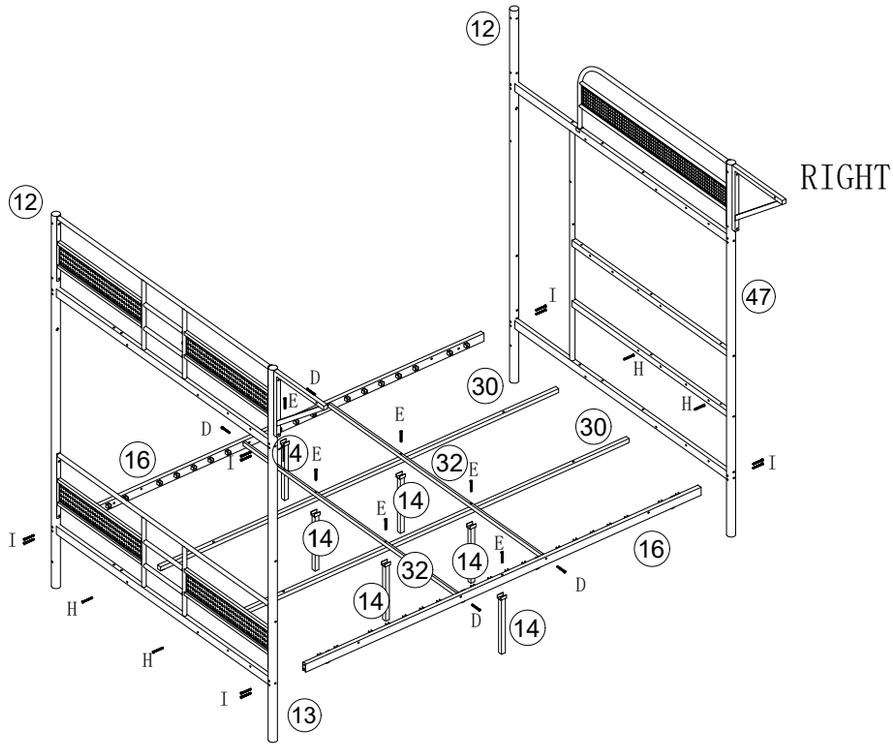

Step 5

Q	x 1	I	x 8	H	x 4	D	x 4
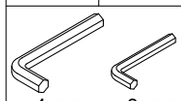		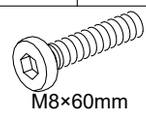		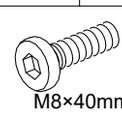		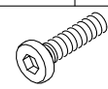	
4 mm	3 mm	M8×60mm		M8×40mm		M6×45mm	

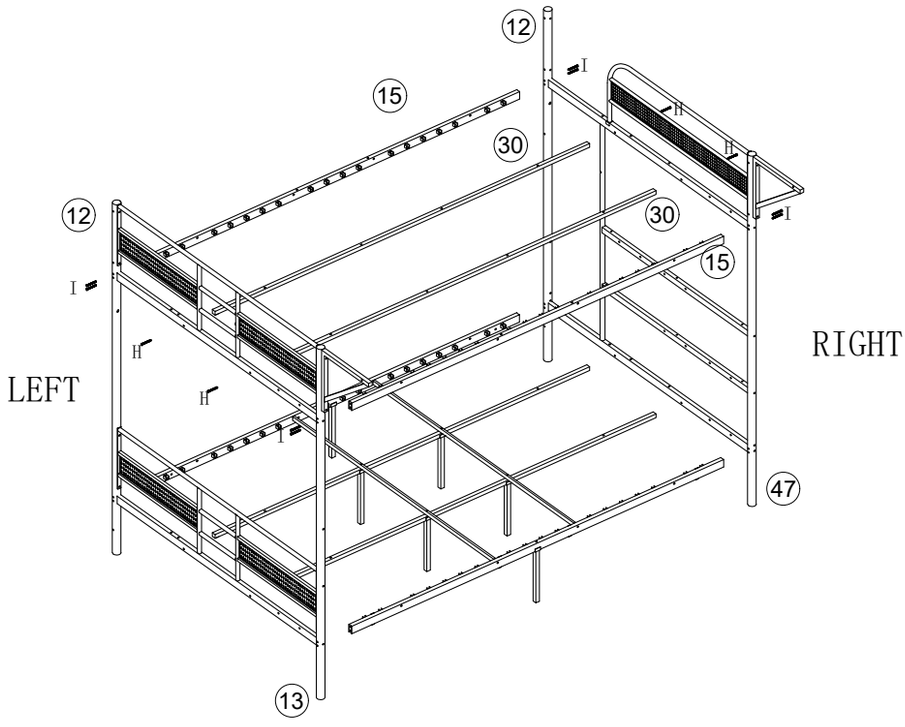

Step 6

Q	x 1	L	x 4	D	x 4	C	x 4
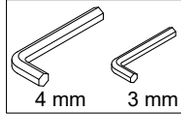							
4 mm	3 mm			M6×45mm		M6×30mm	

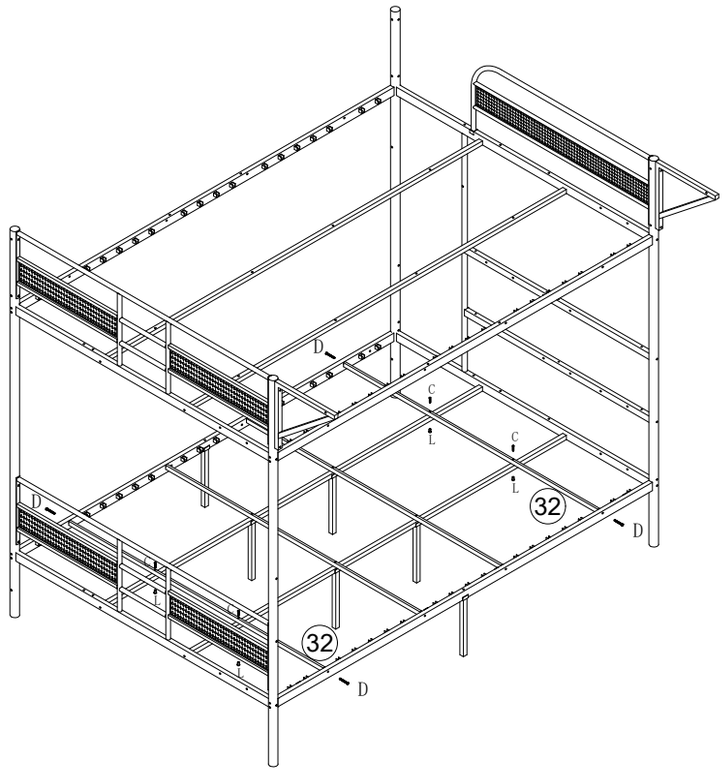

Step 7

Q	x 1	L	x 10	E	x 4	D	x 10	C	x 10	B	x 4
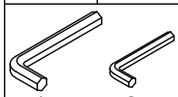				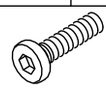							
4 mm	3 mm			M6×50mm		M6×45mm		M6×30mm		M6×10mm	

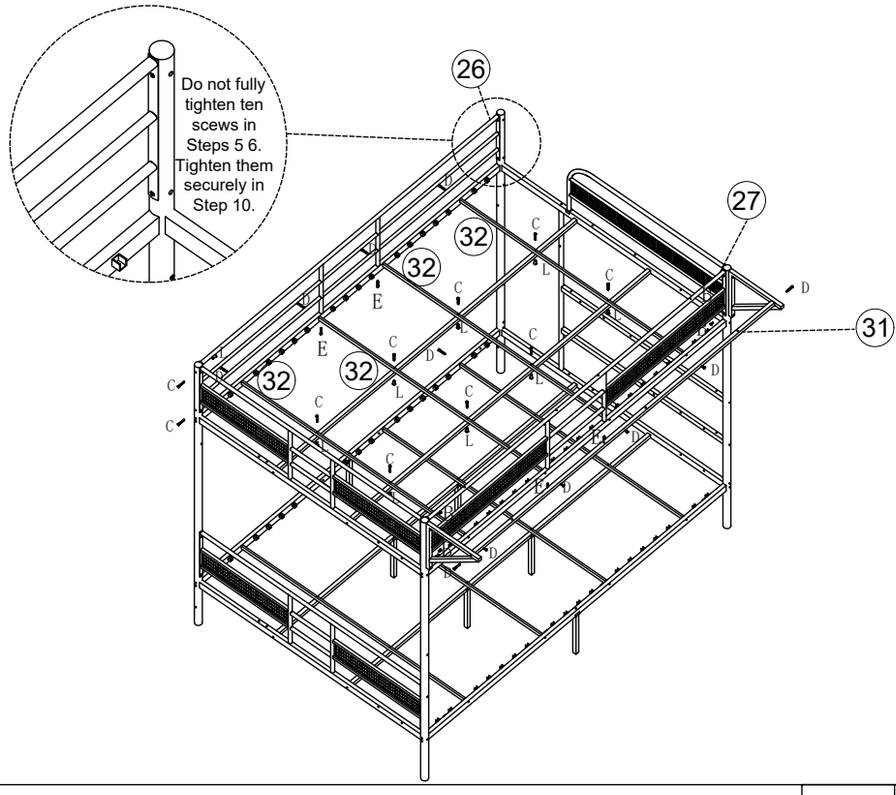

Step 8

Q	x 1	B	x 2
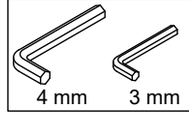			
4 mm	3 mm	M6×10mm	

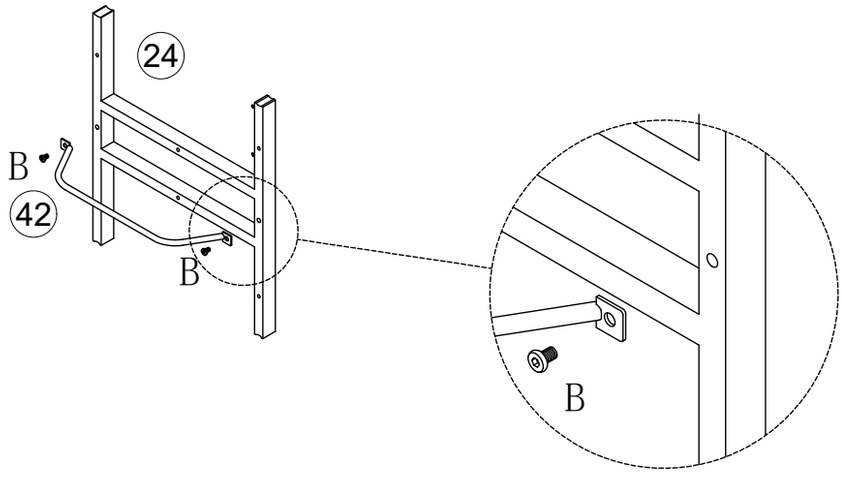

Step 9

T	x 1	Q	x 1	L	x 1	F	x 4	D	x 5	C	x 1
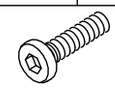		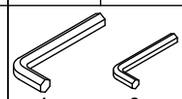				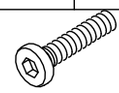		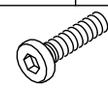			
M6×35mm		4 mm	3 mm			M6×60mm		M6×45mm		M6×30mm	

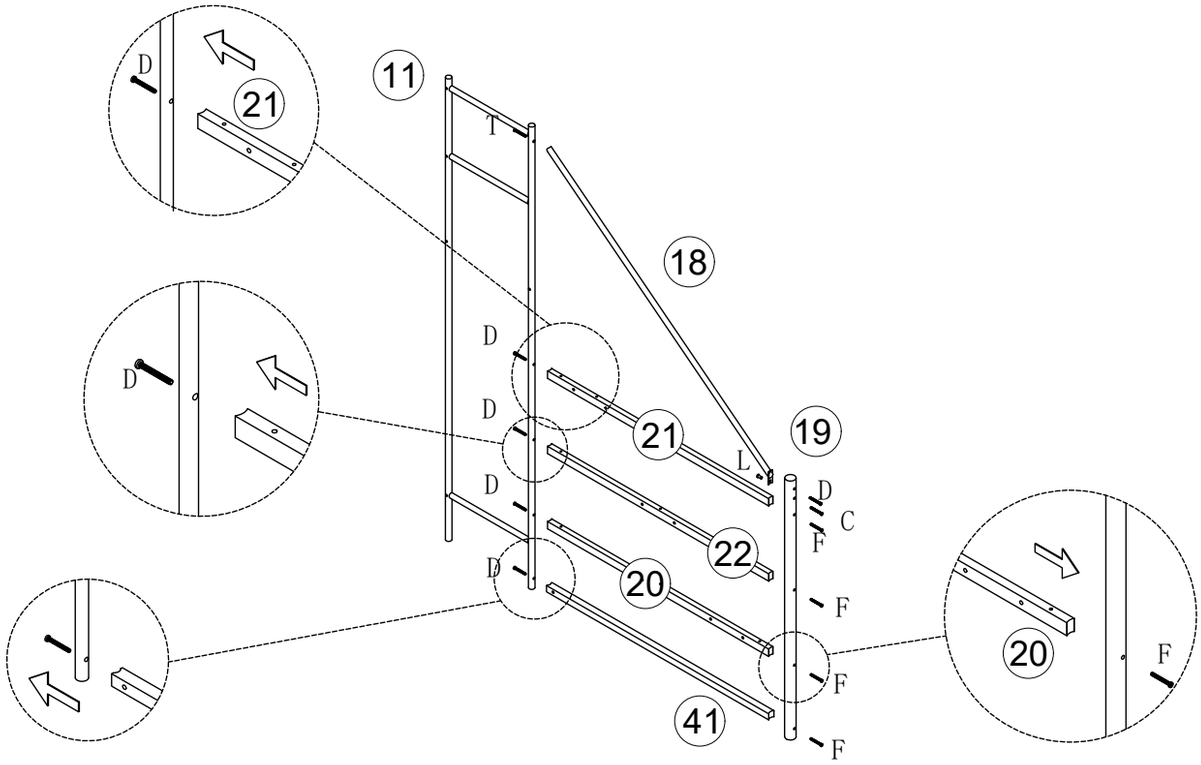

Step 10

Q	x 1	F	x 1	E	x 3	D	x 19
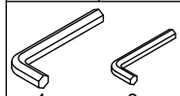		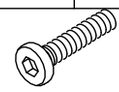		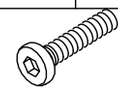		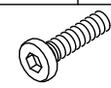	
4 mm	3 mm	M6×60mm		M6×50mm		M6×45mm	

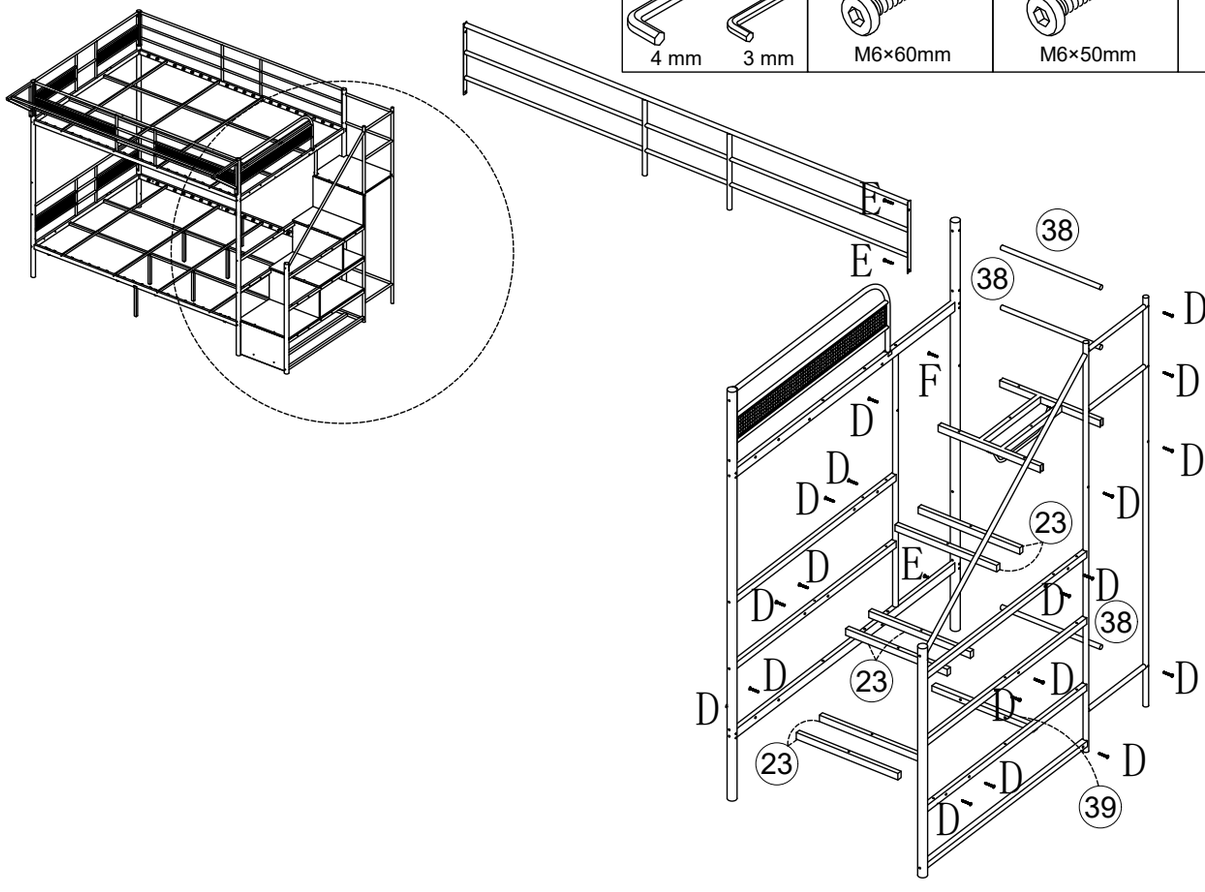

Step 11

V	x 1

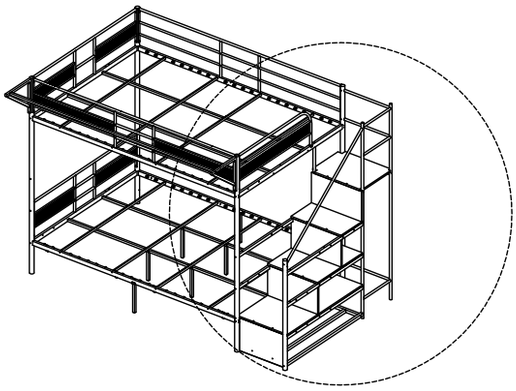

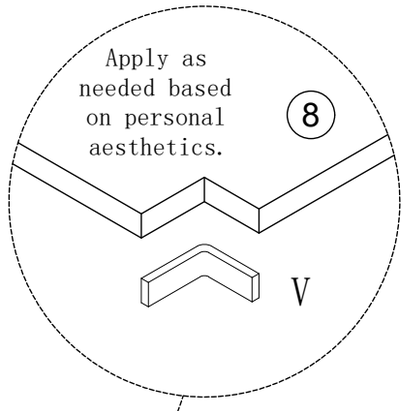

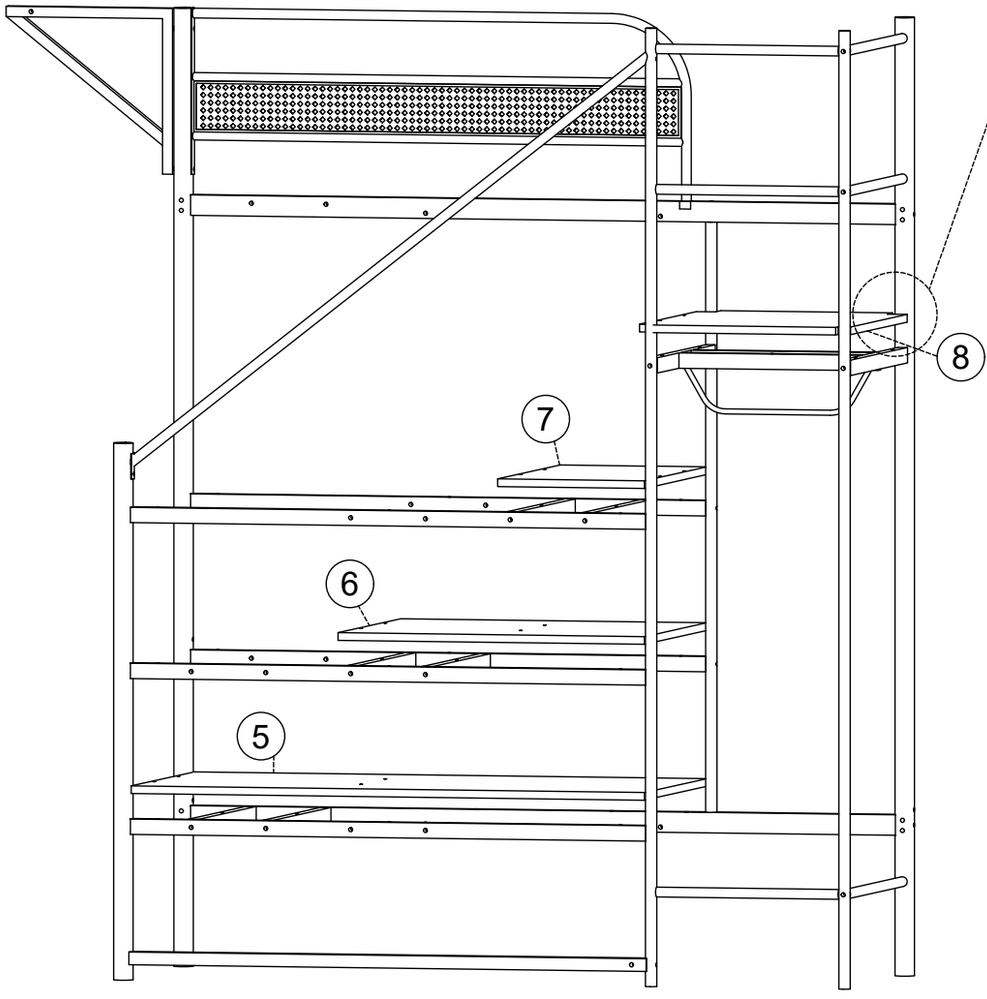

Step 12

Q	x 1	G	x 14
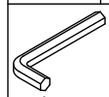 4 mm	 3 mm	 M5×38 mm	

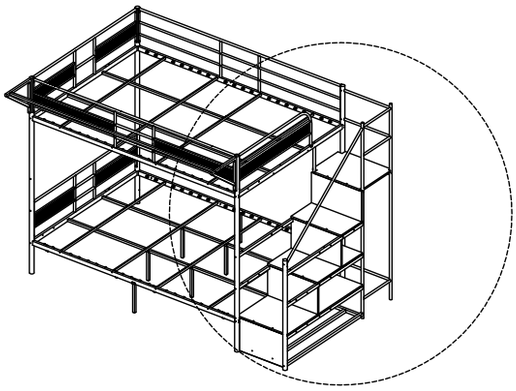

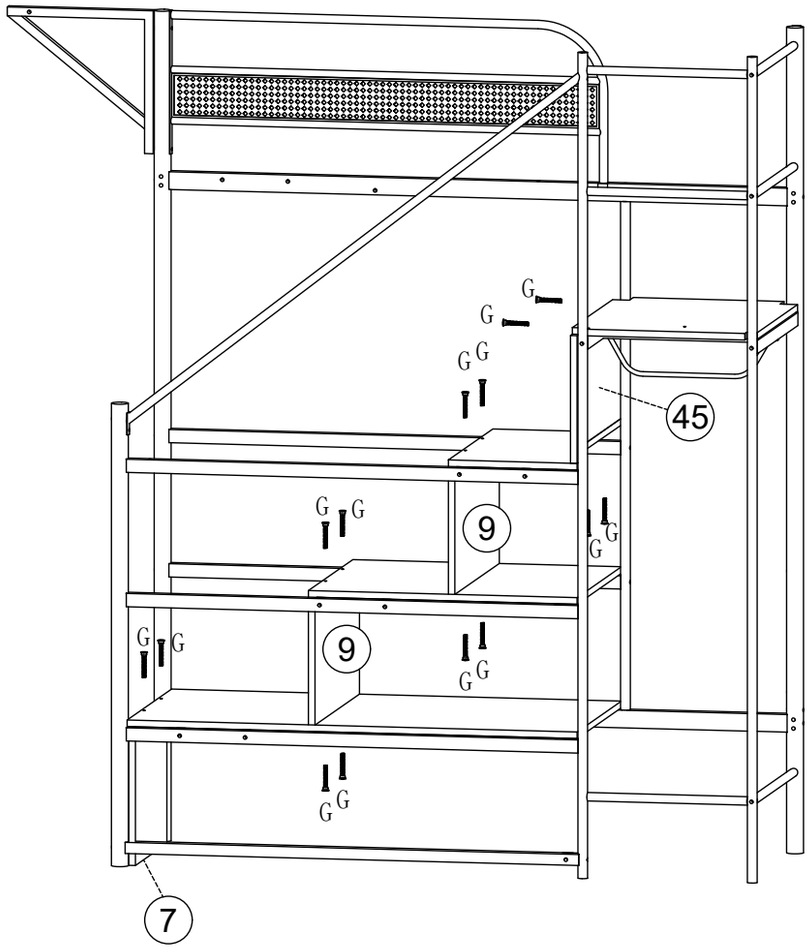

Step 13

Q	x 1	D	x 4	A	x 26
4 mm 3 mm		M6×45mm		M5×40mm	

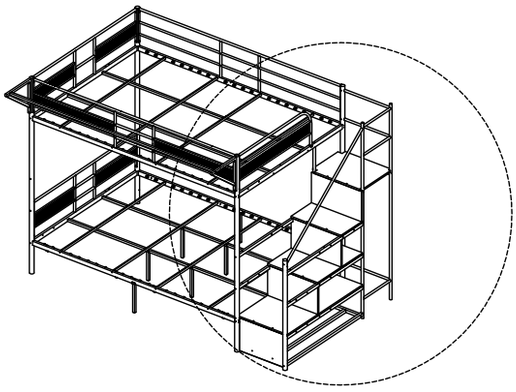

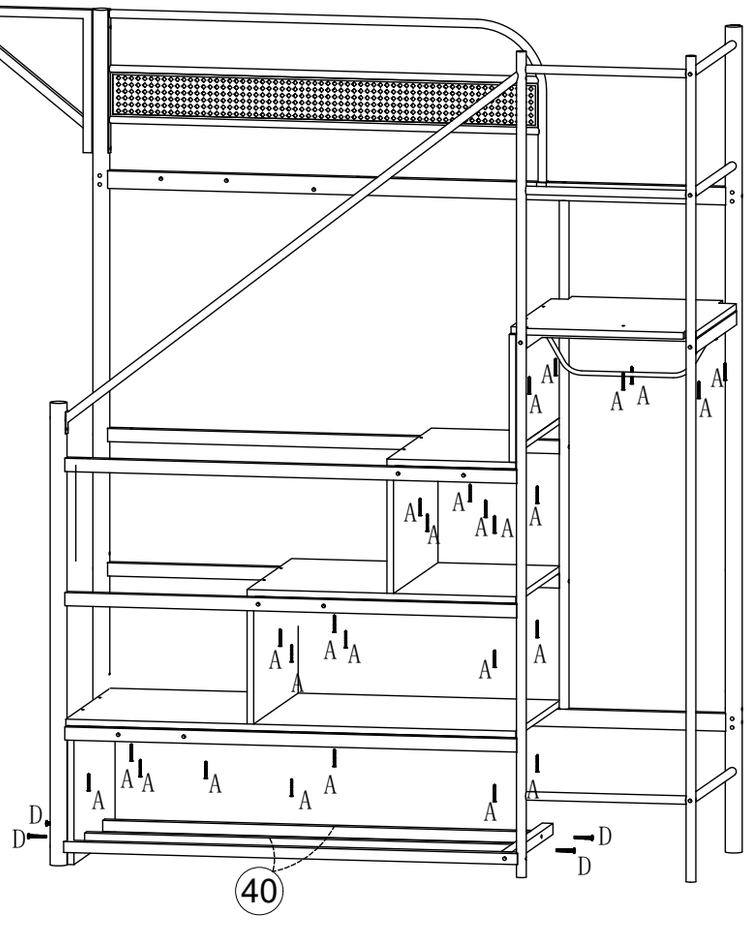

Step 14

Q	x 1	P	x 4	K	x 1	J	x 1	G	x 10	D	x 4
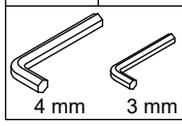		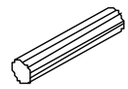				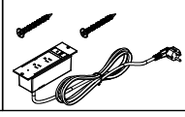		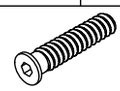		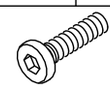	
4 mm	3 mm							M5×38 mm		M6×45mm	

S	x 6
	
M6×20mm	

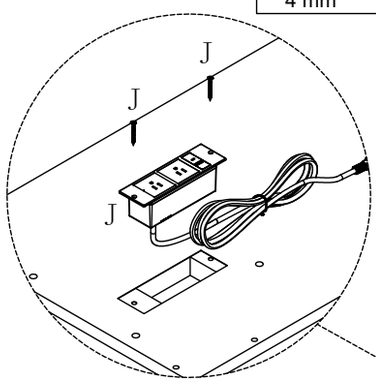

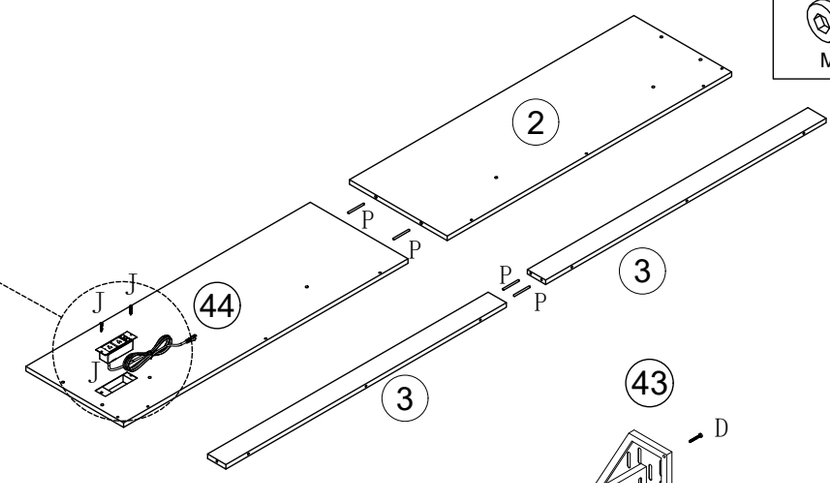

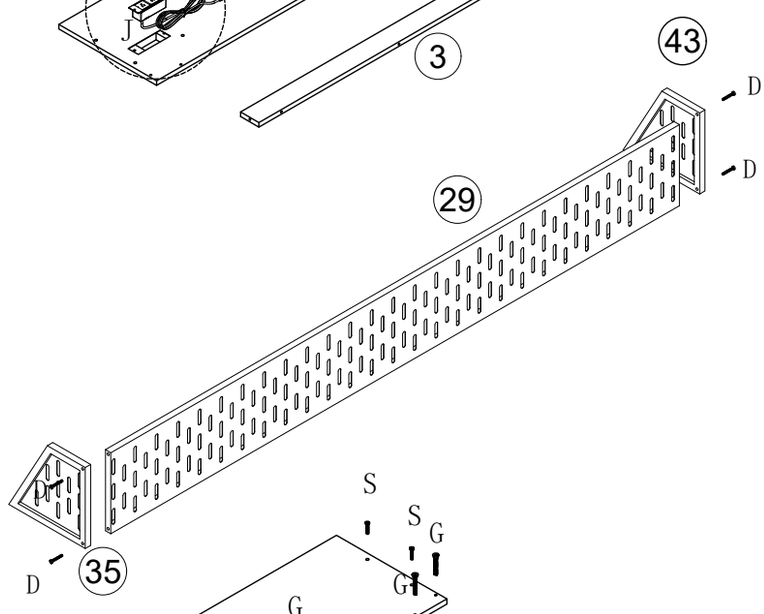

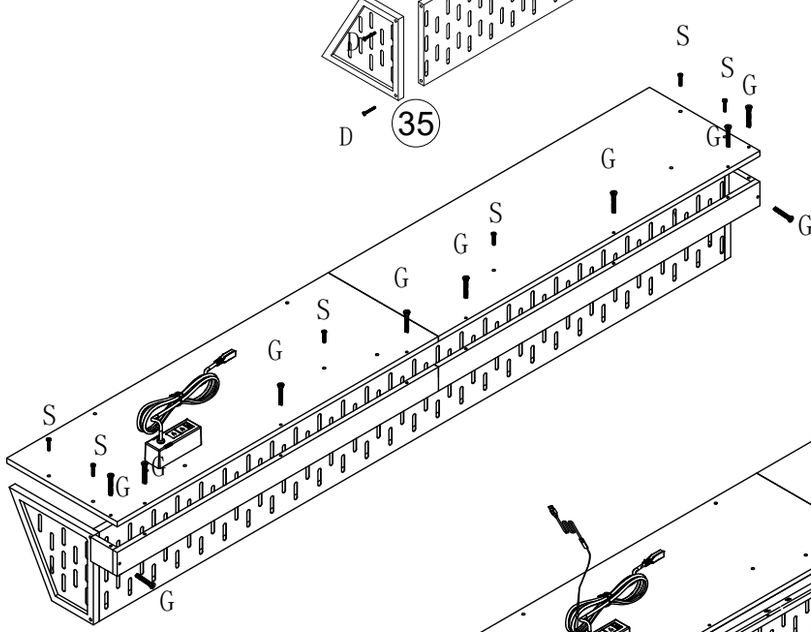

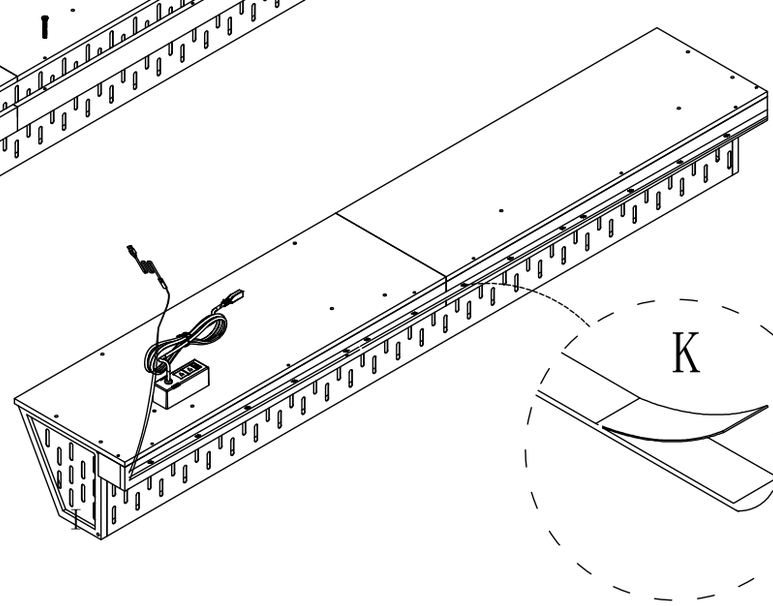

Step 15

U	x 4	Q	x 1	C	x 8
		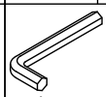 4 mm 3 mm		 M6×30mm	

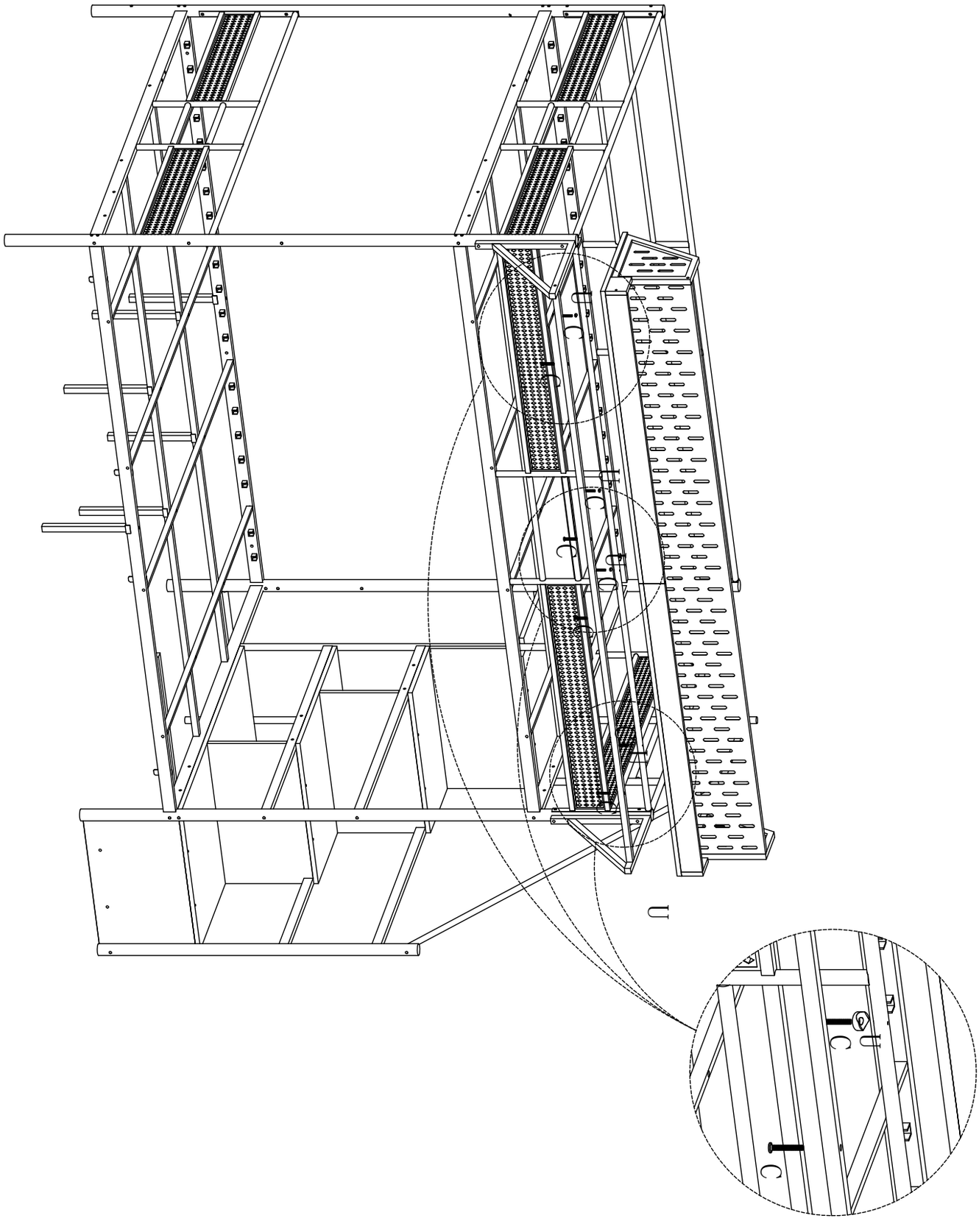

Step 16

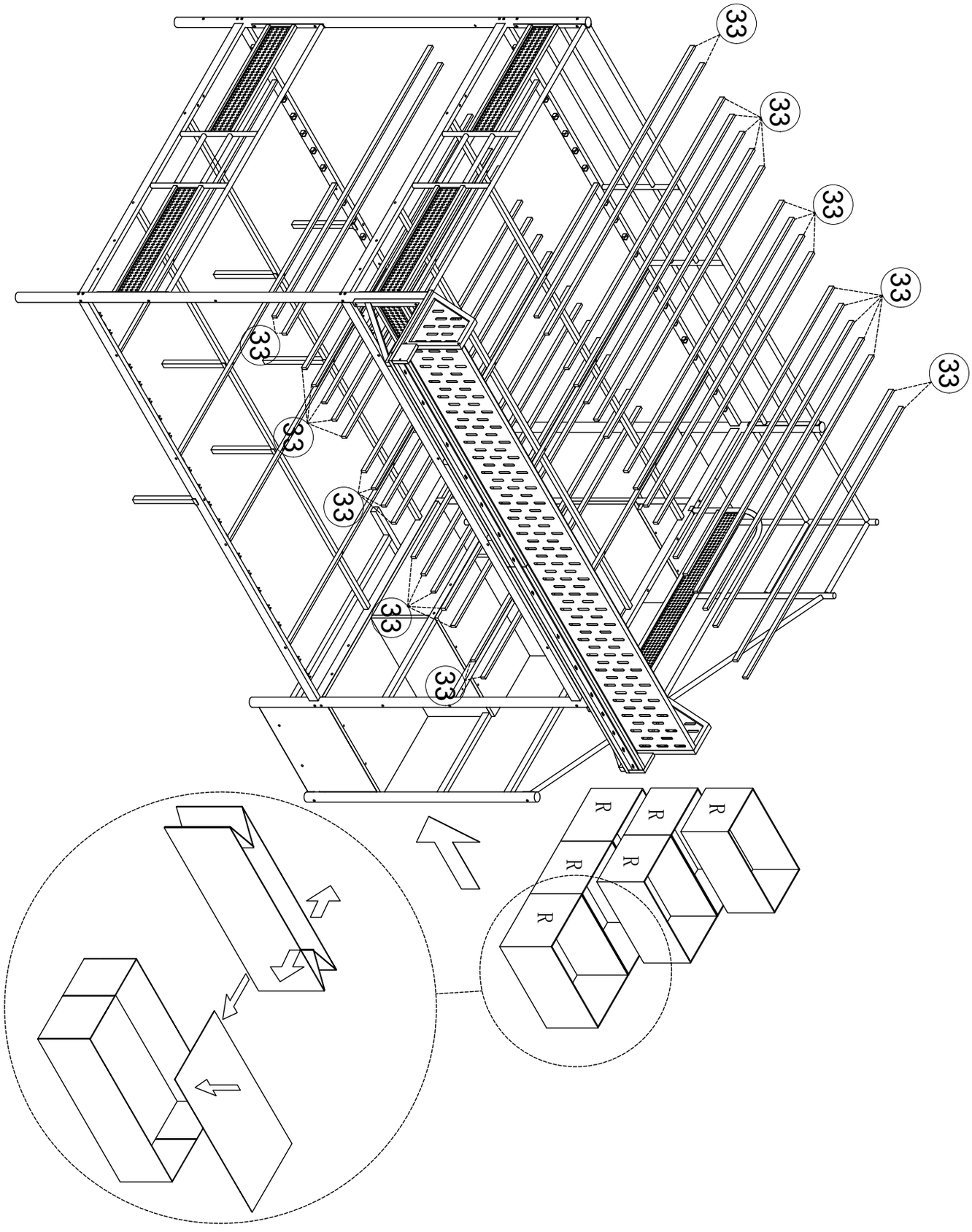

Step 17

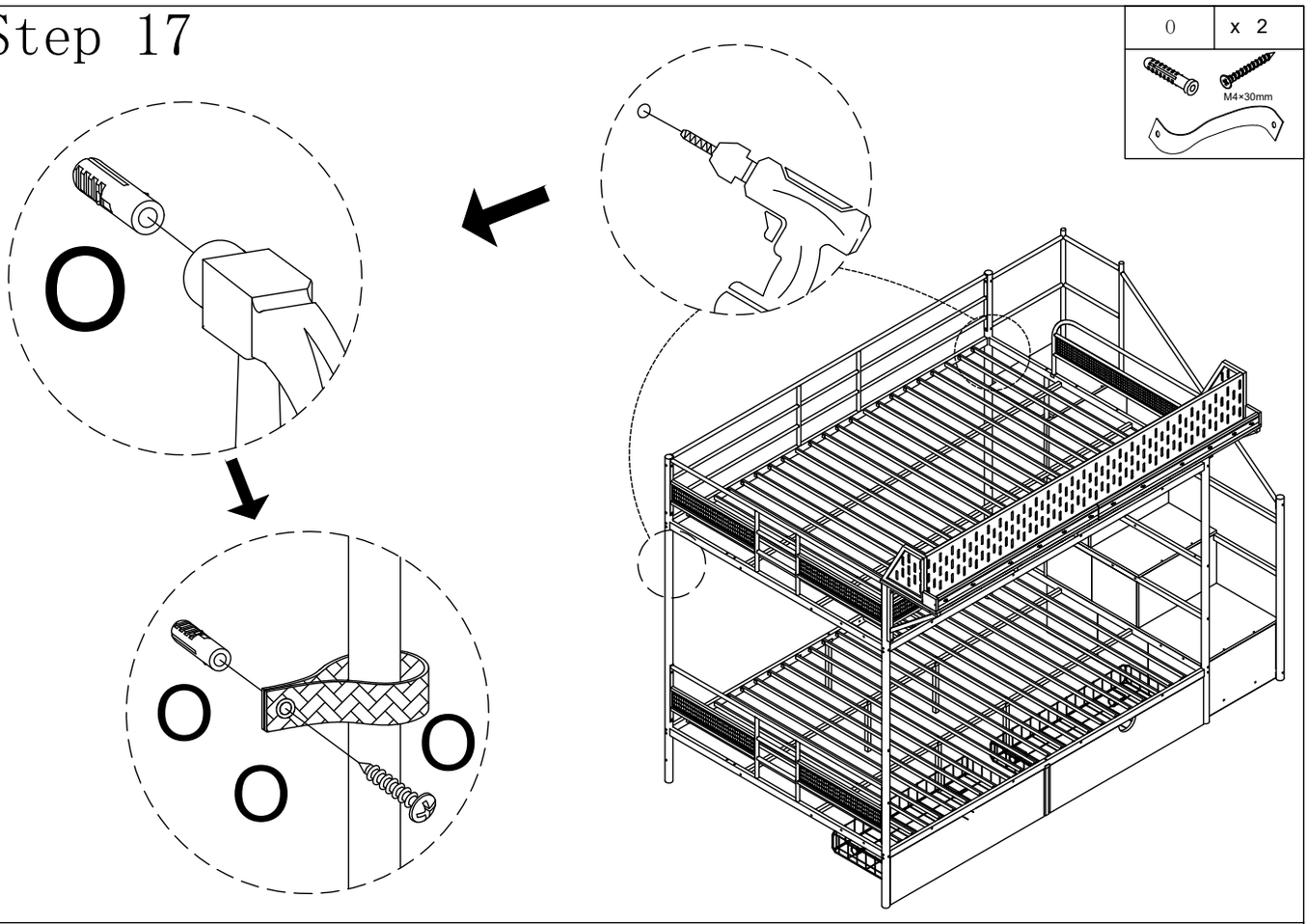

Step 18

