Electric adjustable desk installation drawing

Parts List

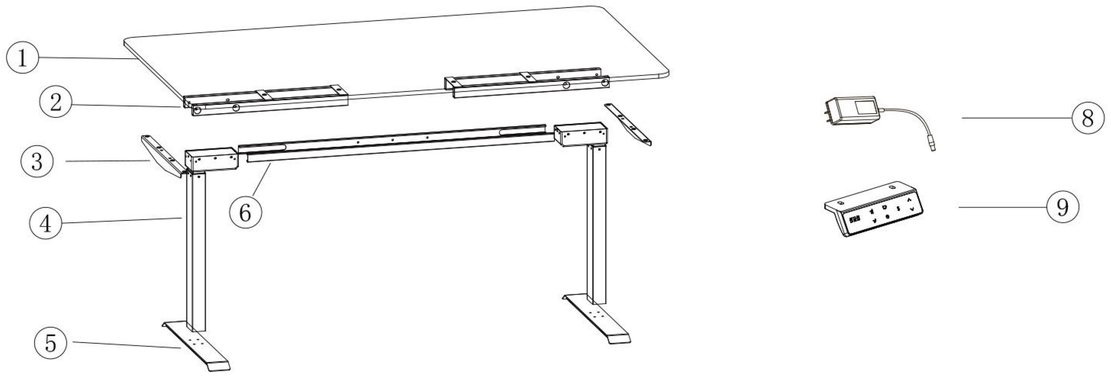

① 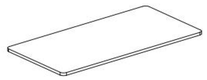 Desk board(X1)	② 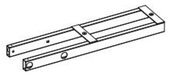 Crossbeam(X2)	③ Corner brackets(X2)
④ 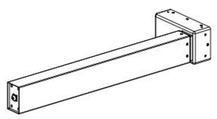 Table legs(X2)	⑤ 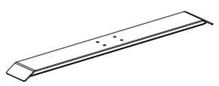 Base feet(X2)	⑥ Stretchable crossbeam(X2)
⑦ Wire organizer(X1)	⑧ 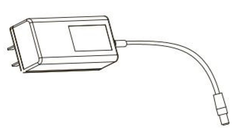 Power adapter(X1)	⑨ 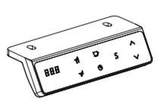 Hand controller(X1)

Screw package list

A M6×12(×20)	B M6×10(×4)	C M6×15(×8)	D ST4×15(×14)
E 5mm T-shaped wrench	F Phillips screwdriver	G Adjustable foot pads	

Spare screw package list

A M6×12(×2)	B M6×10(×1)	C M6×15(×1)	D ST4×15(×2)

Installation step 1

A	M6×12(×8)
E	

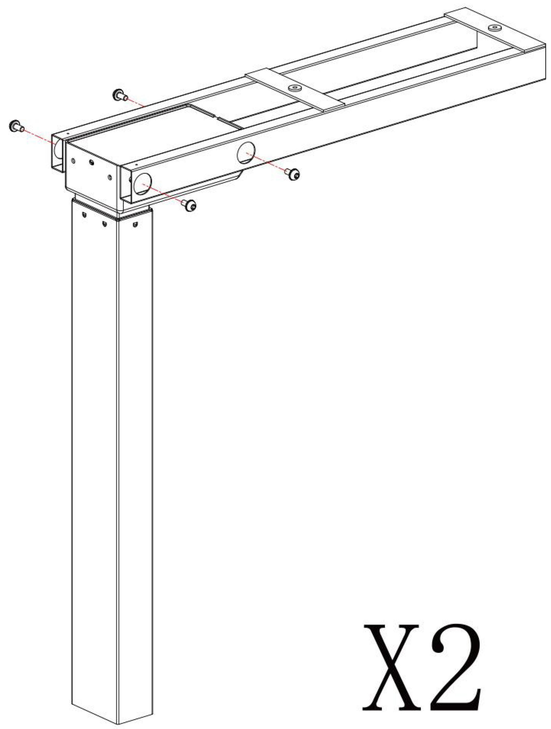

X2

Installation step 2

B	M6×10(×4)
F	

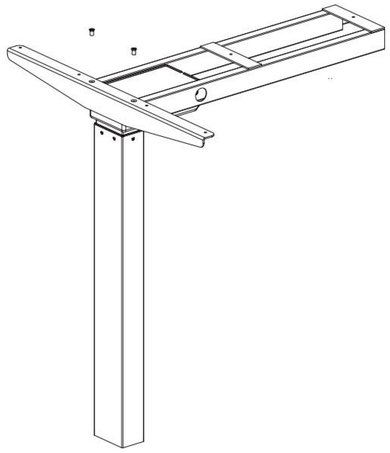

X2

Installation step 3

C	M6×15(×8)
E	
D	ST4×15(×14)
F	

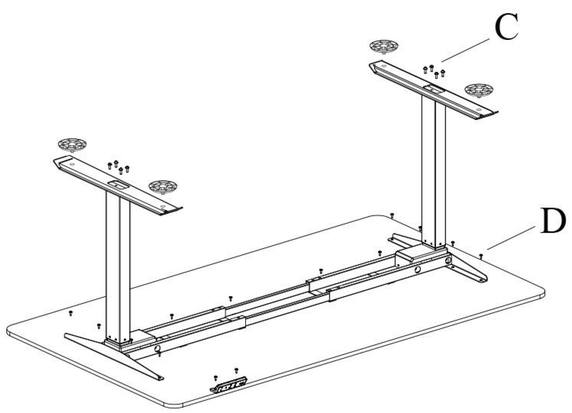

Note:

1.The side away from the hand controller is for the long power cord.

2.Adjust to the appropriate length according to the tabletop hole position.

3.The force applied when installing the tabletop should be around 8N.

Installation step 4

A	M6×12(×12)
E	

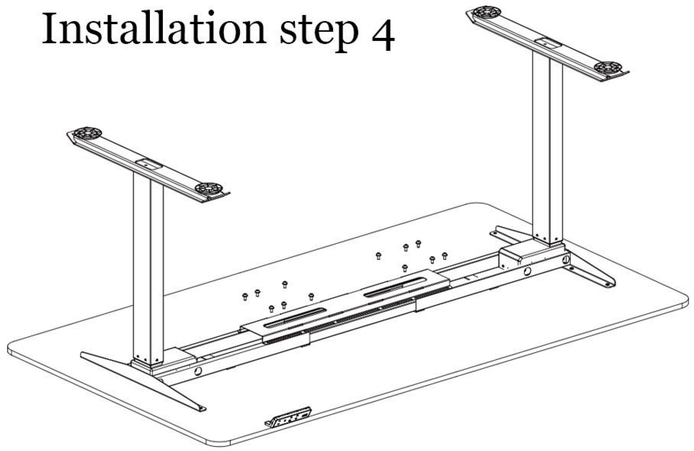

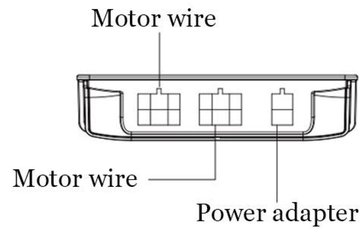

Complete

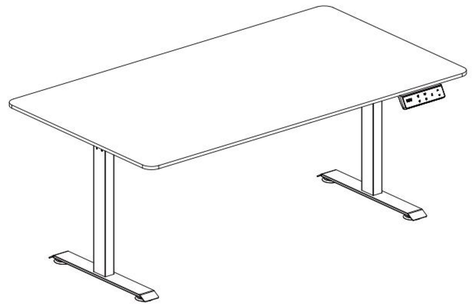

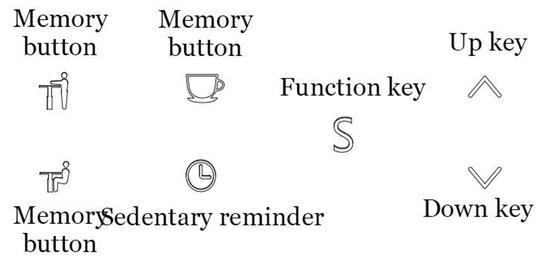

Instruction for use:

1.Press the button for a long time when in the lowest position or in case of an error code to reset.

2.Memory position: Move the tabletop to the desired position, press the S button, the display screen will flash, and then press the corresponding memory button.

3.Short press the memory button to move to the set height, and press any button during operation to stop.

4.Sitting reminder function: Press the button to enter the sitting reminder setting, and press the upper and lower buttons to turn it on/off.

(1) When the sitting reminder is triggered after the table stays at any height exceeding the set sitting reminder duration, the sitting reminder is activated.

(2) When the sitting reminder is triggered, it reminds once every 2 minutes, and each reminder displays the current height for 9 seconds, with a total of three reminders.

(3) If the set duration is reached or the number of reminders is less than three, and the height of the table changes, the timing for the sitting reminder restarts.

(4) After the sitting reminder function is turned on, the display screen shows three small decimal points in the off-screen state, indicating that the function is turned on. Turning off the sitting reminder function will not display the small decimal points.

(5) If the reminder reaches three times and the height of the table has not changed, the sitting reminder will automatically turn off. If you want to restart the function, you need to turn it on again according to the steps.

5.Child lock function: Press the S button and the button simultaneously, the screen displays LOC, and the child lock is activated. After the child lock is activated, repeat the operation to turn off the child lock.

Instructions for desk legs

As illustrated in the figure, during the third step of table assembly, you are required to first insert the table leg components shown in Figure 1 into their respective positions, and then proceed to fasten the base feet as depicted in Figure 2.

Image 1

Image 2

The installation of drawers

Step 1

To remove the drawer, as shown in the diagram, press down on the lock catch on one side while simultaneously pressing up on the lock catch on the other side, and then you can take the drawer out.

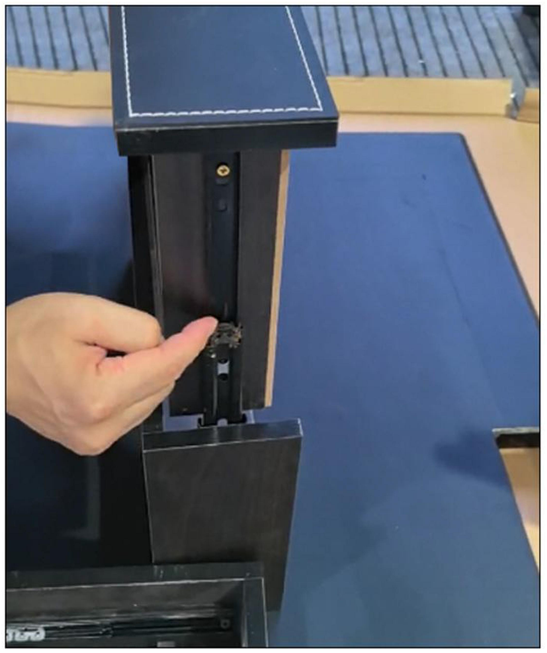

Step 2

Determine a suitable position on the underside of the desktop for installing the drawer (since there are no pre-drilled holes on the desktop underside, you can mark appropriate installation points according to your personal usage needs). After locating the position, align the pre-drilled holes on the bottom of the drawer with the marked installation points on the desktop and secure them with screws to complete the installation. For the other drawer, follow the same steps.