Assembly Instructions

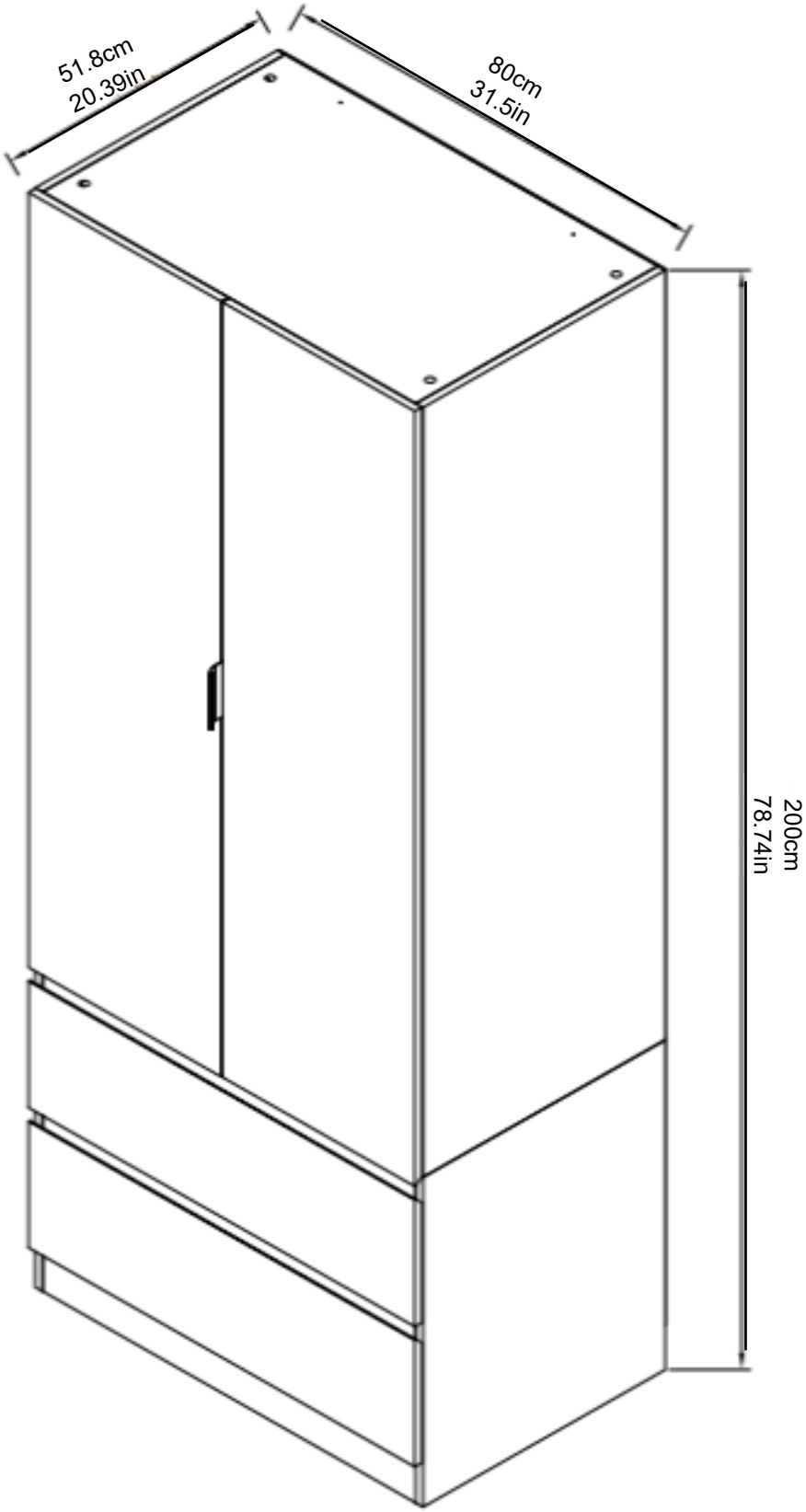

IMPORTANT INFORMATION!

•please read the entire manual before starting to assemble and/or using this product. follow the manual thoroughly and keep it for further reference.

AVOID SCRATCHES!

•In order to avoid scratching this furnuture should be assembled on a soft layer-could be a rug.

IMPROVE EFFICIENCY !

•Try to find a partner to install with you, which can speed up the installation efficiency and shorten the time.

IMPORTANT !

•It is important that any product which is assembled using any kind of screw is re-tightened 2 weeks after assembly,and once every 3 months - in order to assure stability through-out the lifespan of the product.

•For regular maintenance and cleaning of the product, for the frame, please use a rag dipped in neutral detergent to fully wipe it, and then dry it with a clean rag. For glass materials, wipe with a rag dampened with water glass cleaner, and then dry with a dry rag.

•Do not use an electric screwdriver, and do not use too much force when installing, because the board is easy to break.

ANTI-TOPPLE WARNING !

Overturned furniture can cause serious or fatal crush injuries. To prevent tipping over, be sure to use the wall attachment, if not included with this product. Please purchase the wall attachment that fit your wall. If unsure, seek professional advice. Please read and follow each step of the instructions carefully.

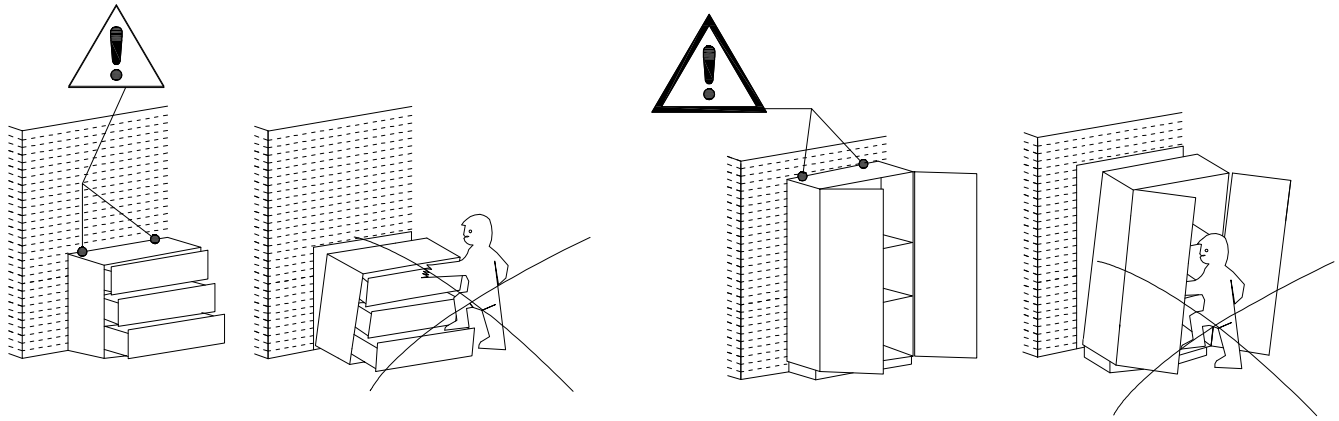

Please prepare the following tools

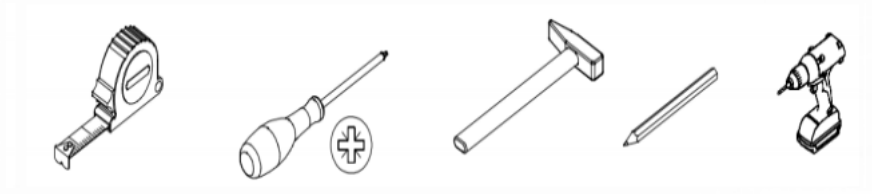

Installation Notes:
The furniture is large and heavy, please choose a good placement before installation. After all the installation is completed, try not to move widely, if necessary, please more than one person to cooperate to carry out.

Please note: After the overall installation is completed, such as vigorous dragging, or brute force to help carry, may cause irreversible damage to the object connection position or plate, the occurrence of cracks, affecting the use and appearance.

The assembly must be done by two people.

L'assemblage doit être effectué par deux personnes.

Es wird empfohlen, dass zwei Personen den Artikel montieren.

El montaje debe ser efectuado por dos personas.

A montagem deve ser efetuada por duas pessoas.

Il montaggio deve essere effettuato da due persone.

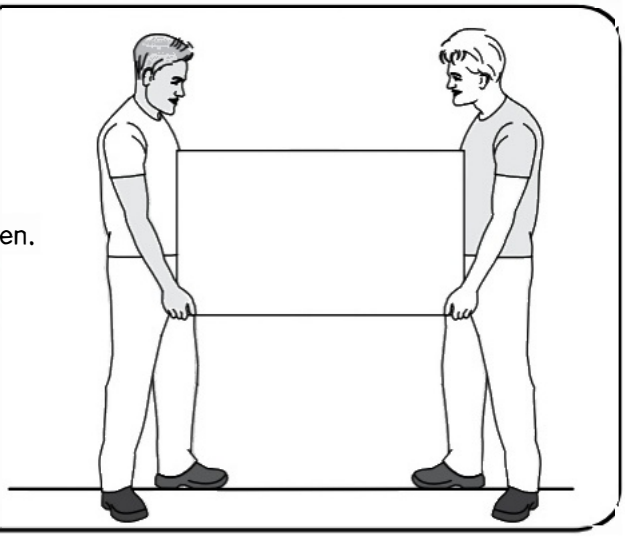

This product contain small parts, please,
keep out of reach of children.

Ce produit contient de petites pièces, s'il vous plait,
à conserver hors de portée des enfants.

Bitte halten Sie kleine Teile außerhalb der Reichweite von Kinde n.

Este producto contiene piezas pequeñas,
mantener fuera del alcance de los niños.

Este produto contém peças pequenas, por favor,
mantenha fora do alcance das crianças.

Questo prodotto contiene piccole parti,
si prega di tenerle fuori dalla portata dei bambini.

REAL SIZE- TAILLE RÉELLE - ORIGINALGRÖßE - TAMAÑO VERDADERO - TAMANHO REAL- DIMENSIONE REALE

In case of doubt, compare the hardware with the full-size images below.

En cas de doute, veuillez comparer le matériel avec les images en taille réelle ci-dessous.

Vergleichen Sie im Zweifelsfall die Schrauben mit den Abbildungen in Originalgröße.

En caso de dudas, compare las herrajes con las imágenes a seguir en tamaño real.

Em caso de dúvida, compare as ferragens com as imagens abaixo em tamanho real.

In caso di dubbio, confronta le ferramenta con le immagini sottostanti a grandezza reale.

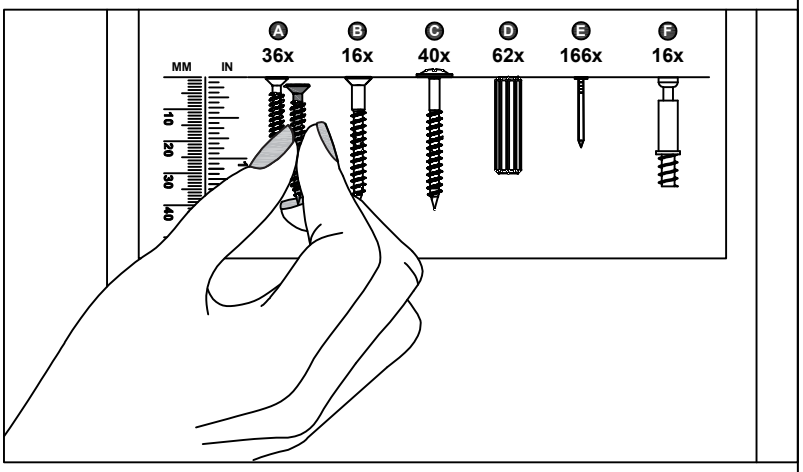

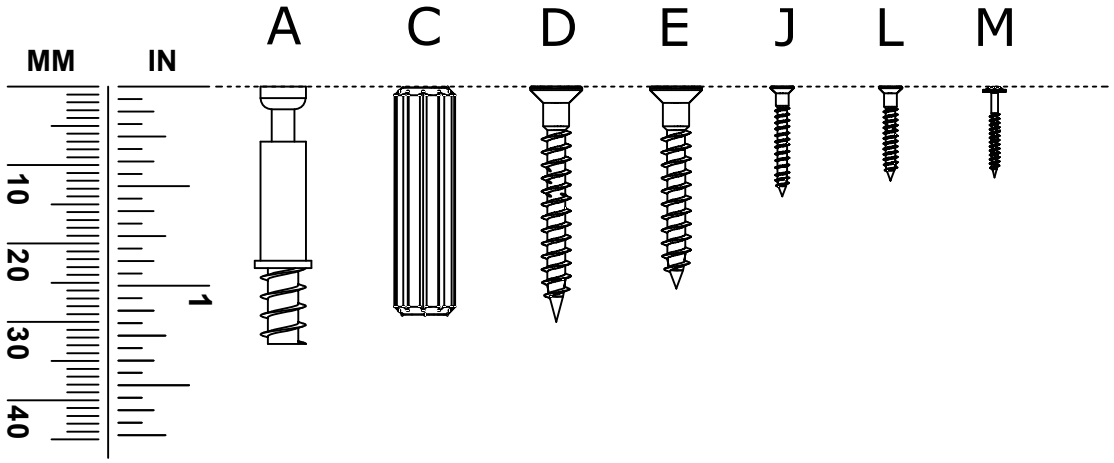

A x 34

B x 34

C x 18

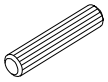

D x 8

E x 6

F x 6

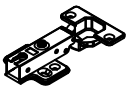

G x 2

H x 1

J x 40

K x 2

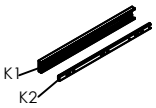

L x 18

M x 34

N x 2

P x 1

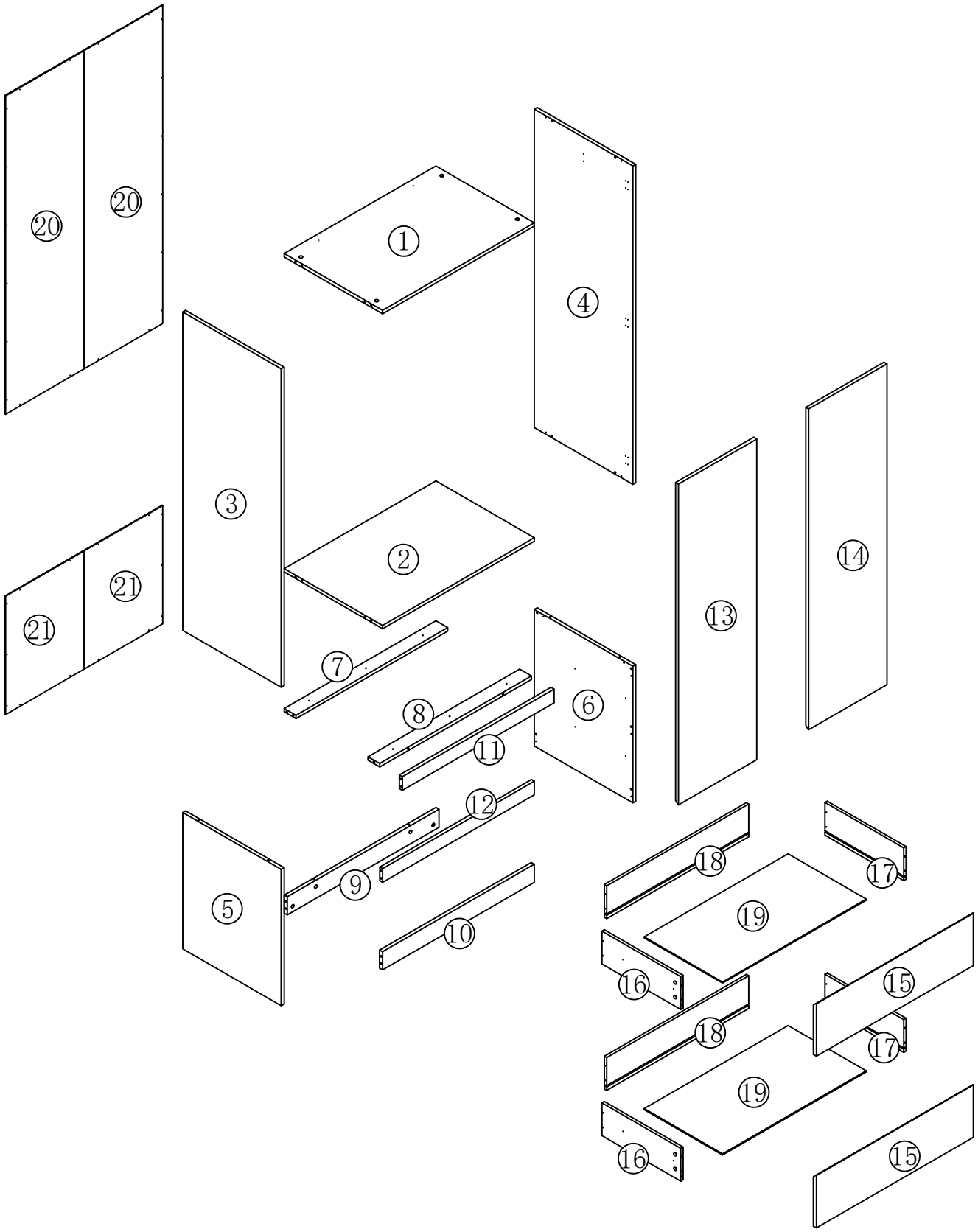
20
20
1
4
3
2
21
21
7
8
11
6
13
14
12
9
5
10
18
17
19
16
15
18
17
19
16
15

ATTENTION - AVERTISSEMENT - ACHTUNG - ATENCIÓN - ATENÇÃO - ATTENZIONE

Assemble the furniture on a clean and flat surface and cover it with the cardboard of the packaging.

Assemblez le meuble sur une surface propre et plane et couvrez-le avec le carton de l'emballage du produit.

Um Beschädigungen zu vermeiden, montieren Sie den Artikel auf einer weichen, sauberenUnterlage.
Tipp: Legen Sie den Artikel auf dem Verpackungskarton.

Montar el mueble sobre una superficie limpia y plana y cubrirlo con el cartón del embalaje del producto.

Montar o móvel sobre uma superfície limpa e plana e forrá-la com o papelão da embalagem do produto.

Montare il mobile su una superficie pulita e piana e rivestirla con il cartone d'imballaggio del prodotto.

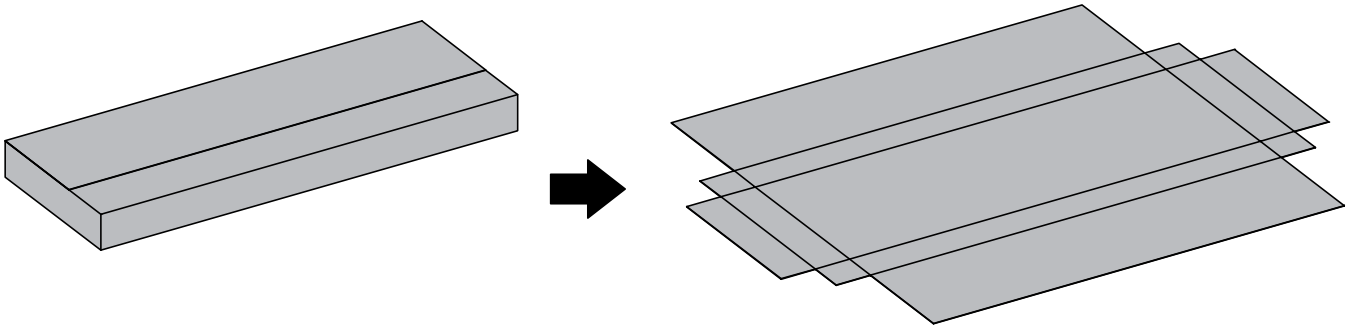

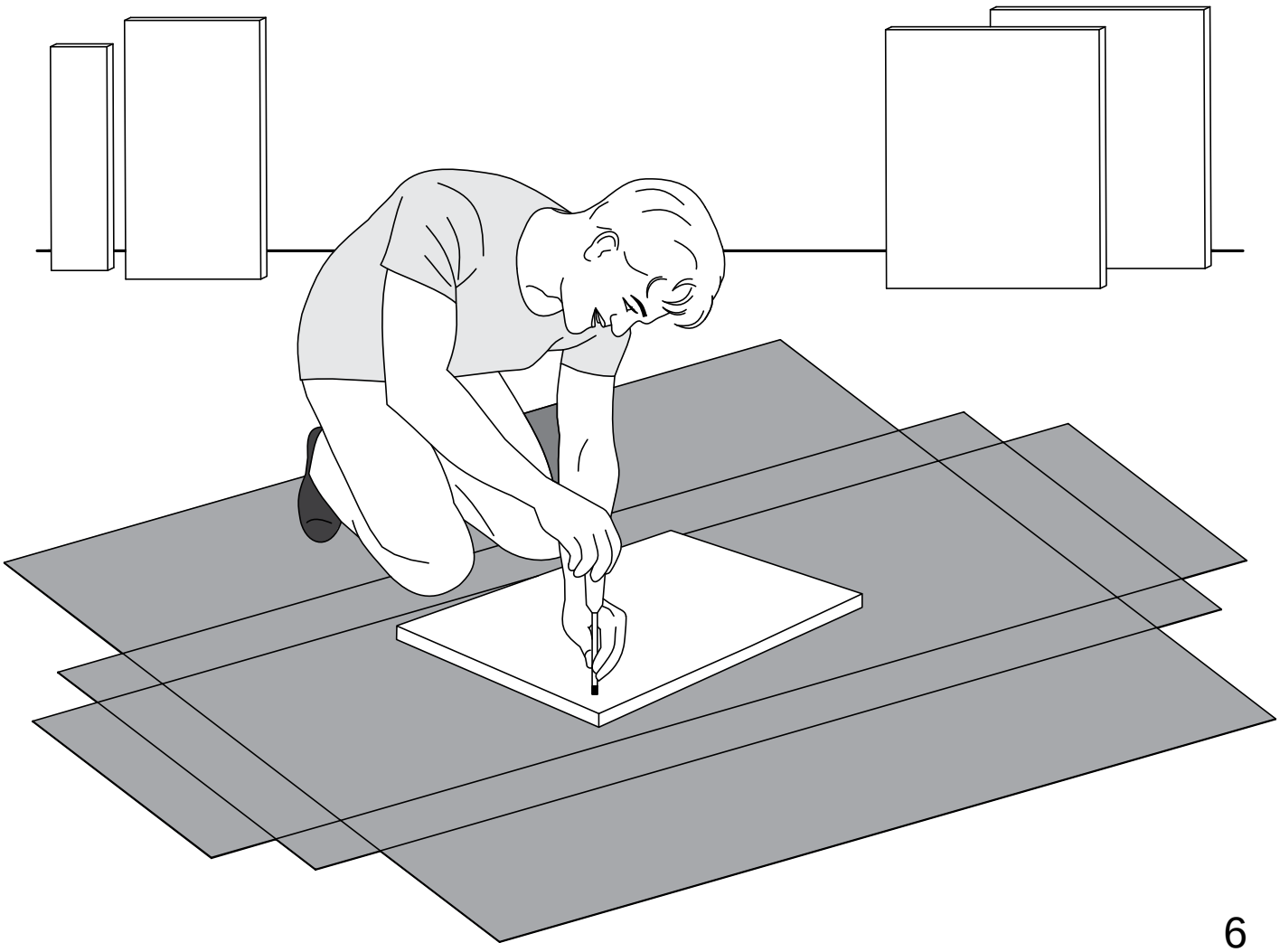

Use parts A and B

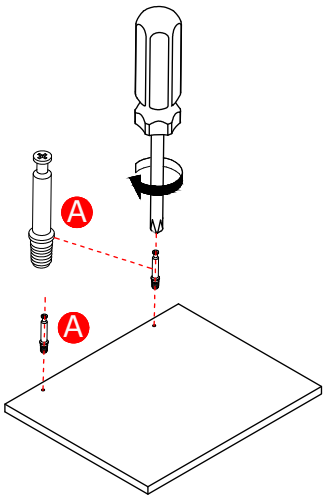

Step1

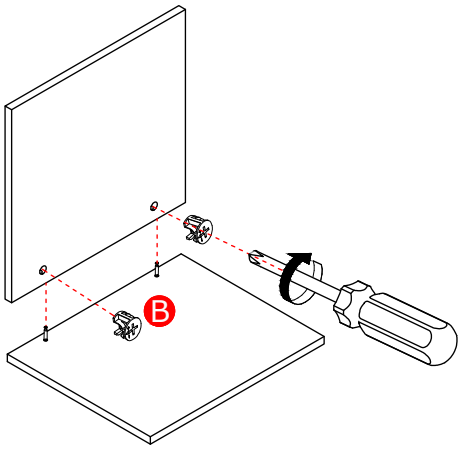

Step2

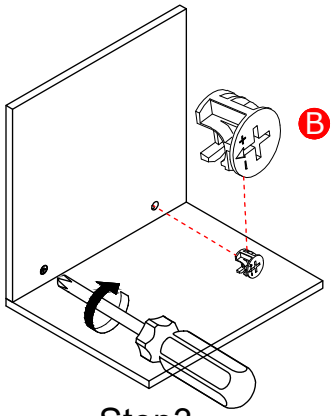

Step3

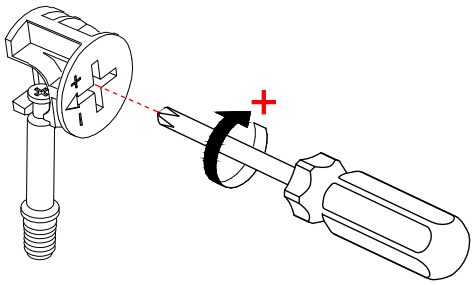

Use a screwdriver to lock in the direction of the "+" sign

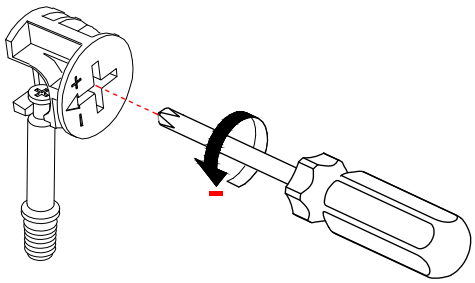

Disassemble along the direction of "-" sign

Slides Must Be Separated Before Assembly.
After Separated, Set Aside Until Needed for Assembly.

Las diapositivas deben separarse antes del montaje.
Después de la separación, déjelo a un lado hasta que sea necesario.

Les glissières doivent être séparées avant l'assemblage.
Après la séparation, mettez de côté jusqu'au moment de l'assemblage.

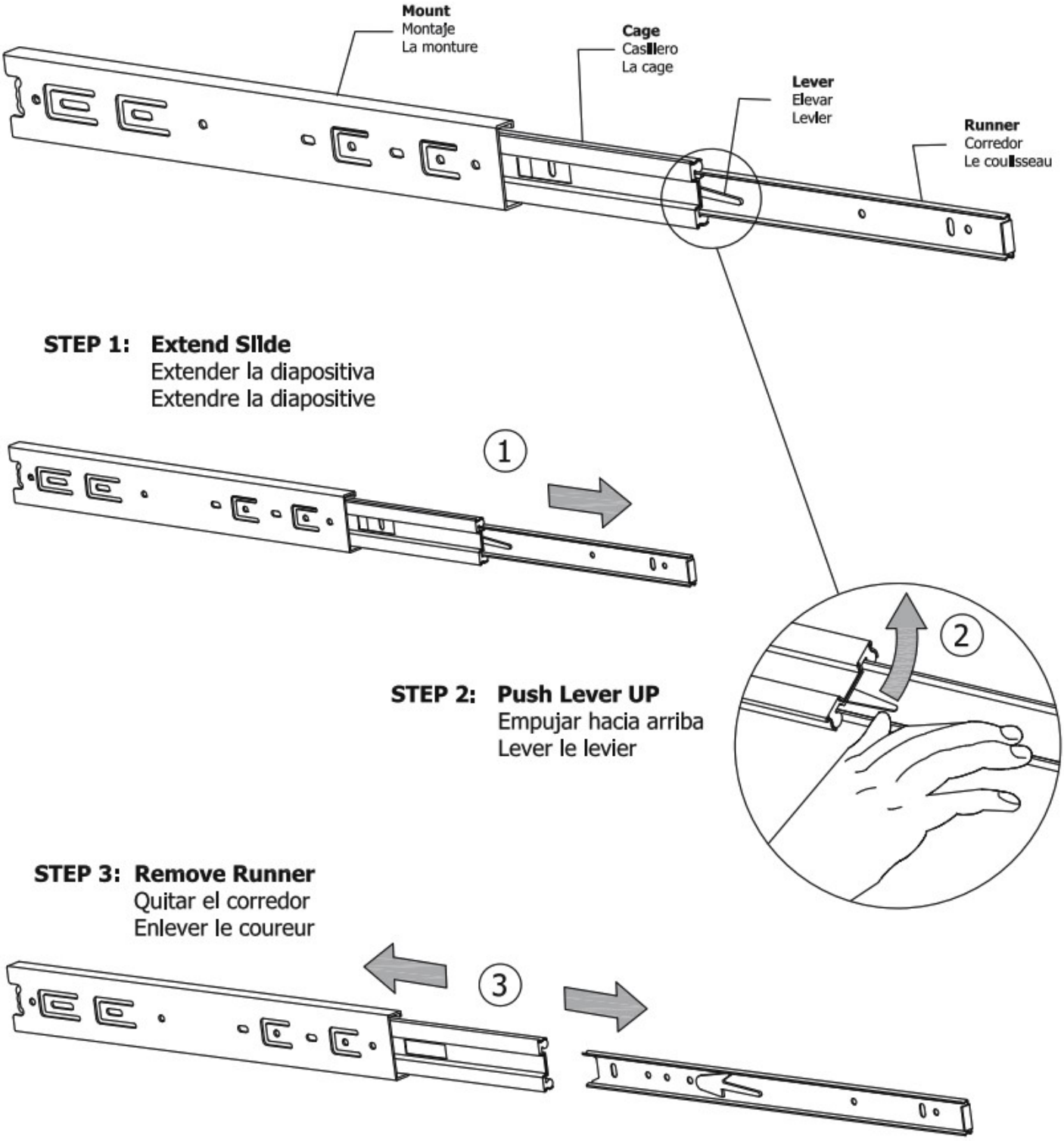

1

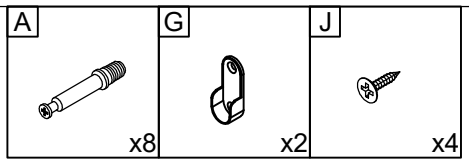

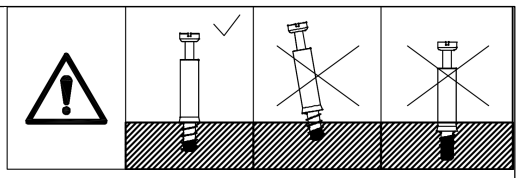

Attach part (G) to parts 3 and 4 using screws (J), and then insert screw A into the designated holes. Make sure to refer to the illustrations for the correct hole placements!

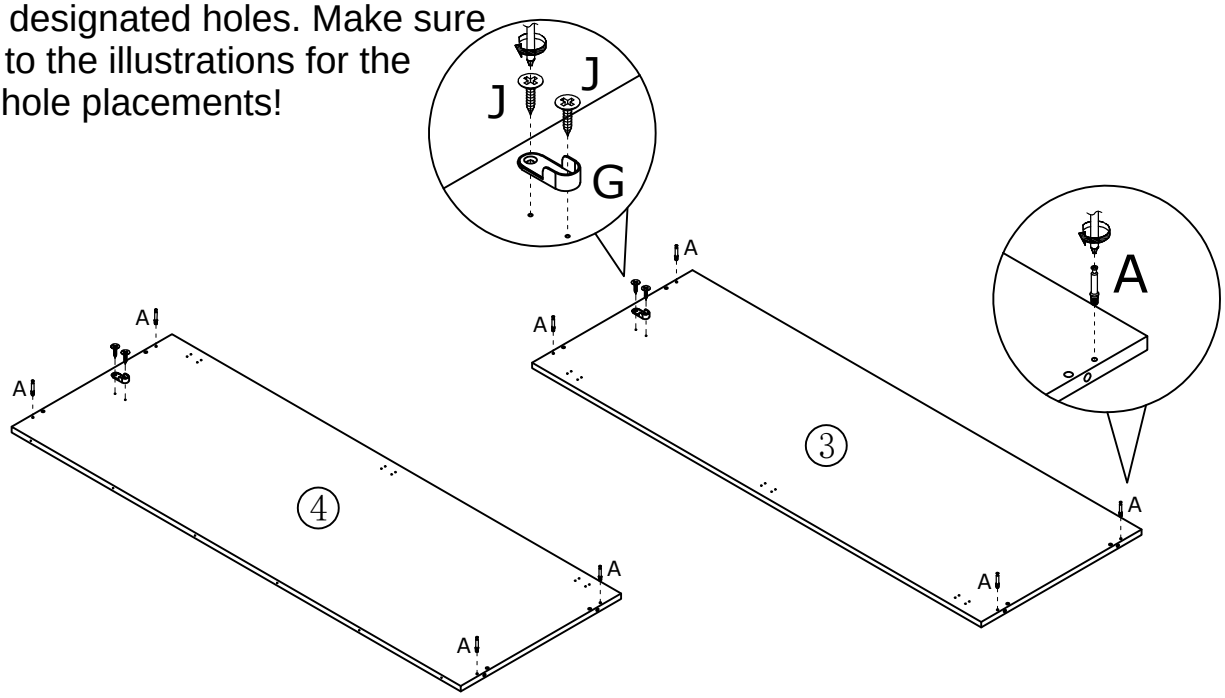

2

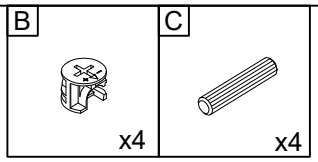

Insert the dowel (C) into the corresponding hole as shown, then insert the cam screw (B) and turn it to the right to secure it. Please ensure that both the dowel and screw are locked vertically and are not tilted.

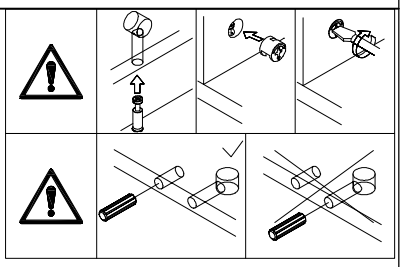

Please note:
This is the backplane mounting guide hole.
Please ensure that it is facing the same direction during installation. Subsequent installations should follow the same orientation.

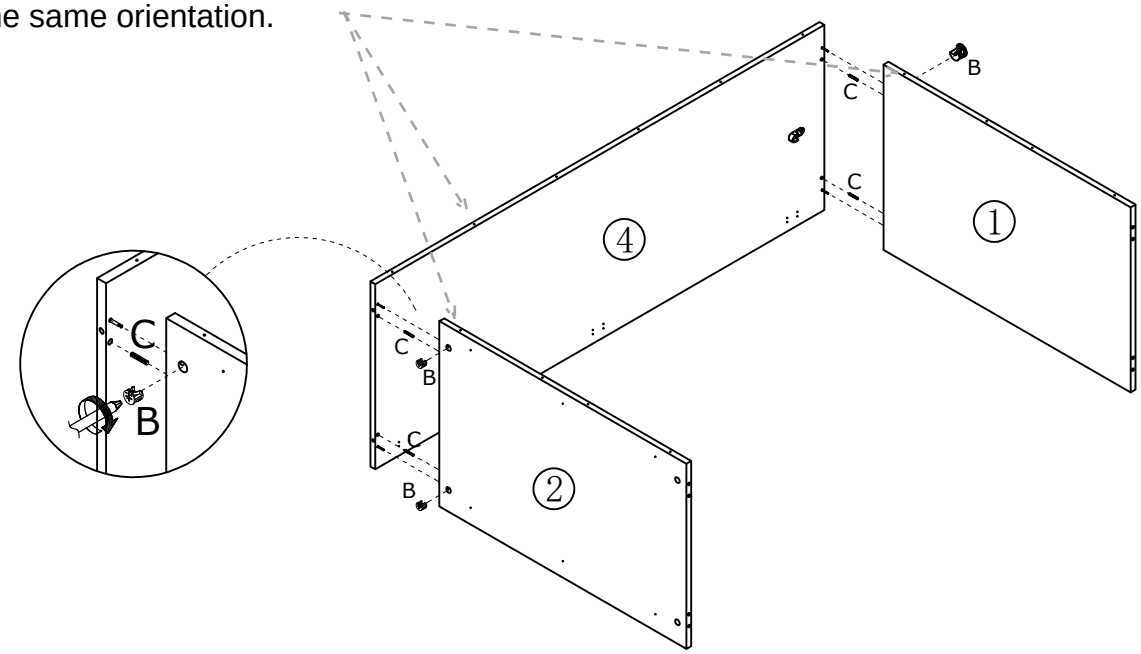

3

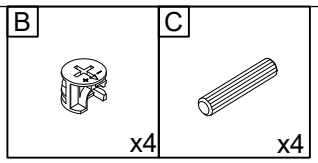

Insert the dowel (C) into the corresponding hole as shown, then insert the cam screw (B) and turn it to the right to secure it. Pleas eensure that both the dowel and screw are locked vertically and are not tilted.

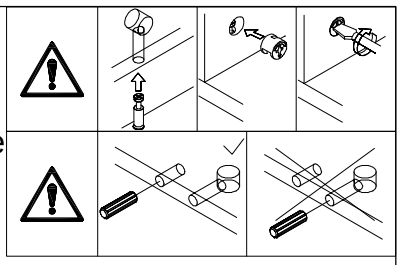

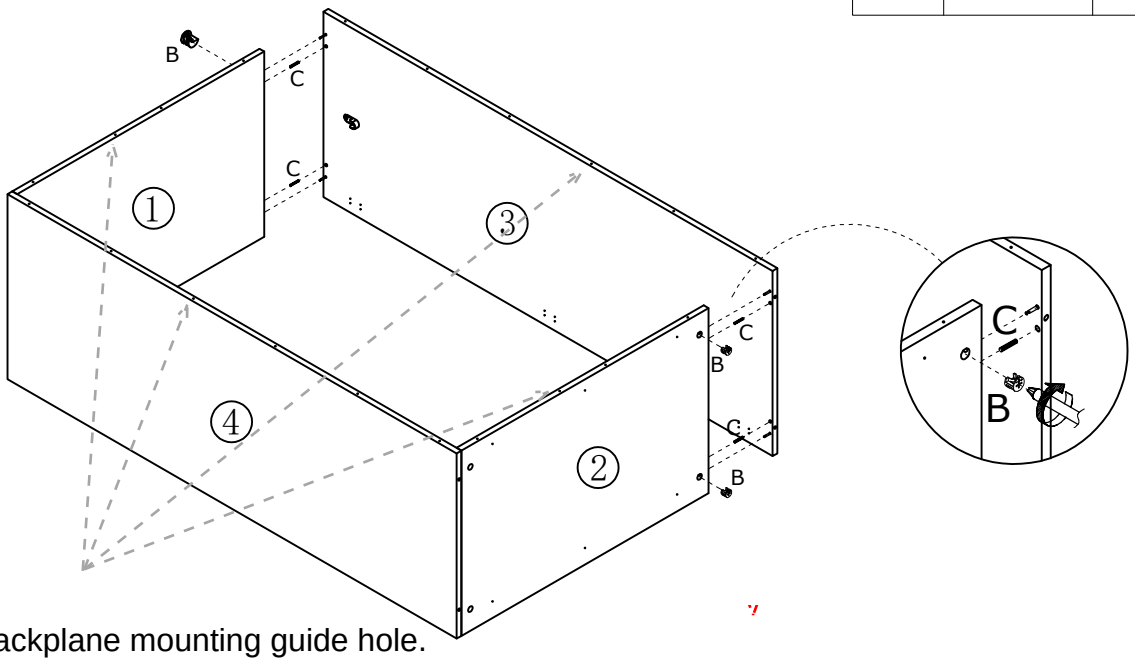

Please note:
This is the backplane mounting guide hole. Please ensure that it is facing the same direction during installation. Subsequent installations should follow the same orientation.

4

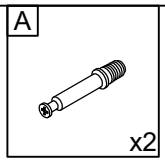

Tighten the screws (A) into the corresponding holes in part 11 making sure to lock them vertically, and do the same for the following steps!

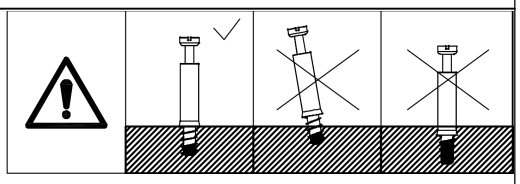

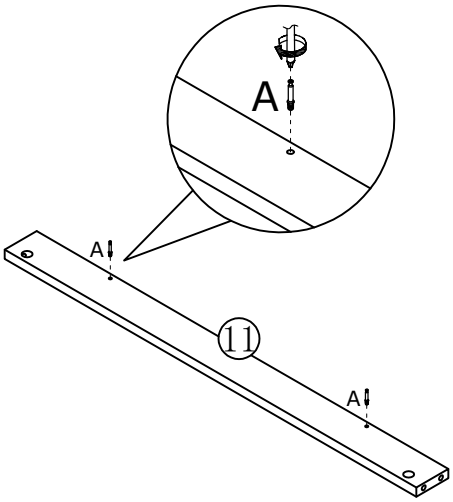

5

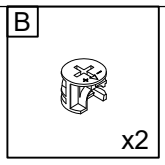

Insert cam screw (B) as shown and rotate to the right to secure. Make sure that both the pin and screw are locked vertically and are not tilted.

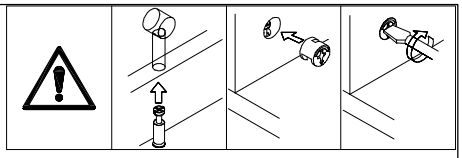

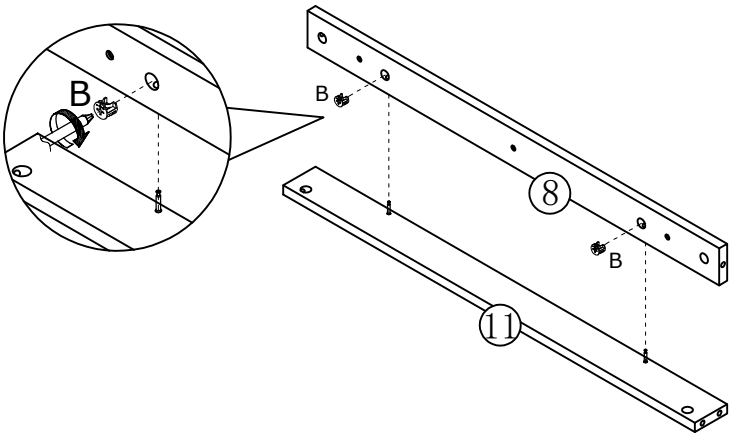

6

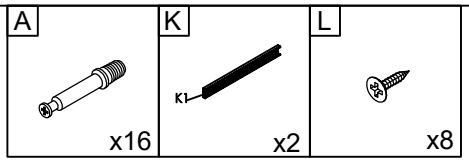

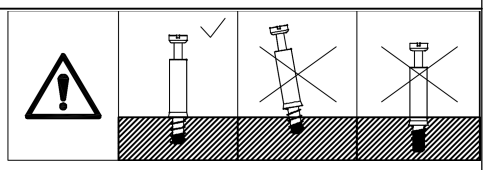

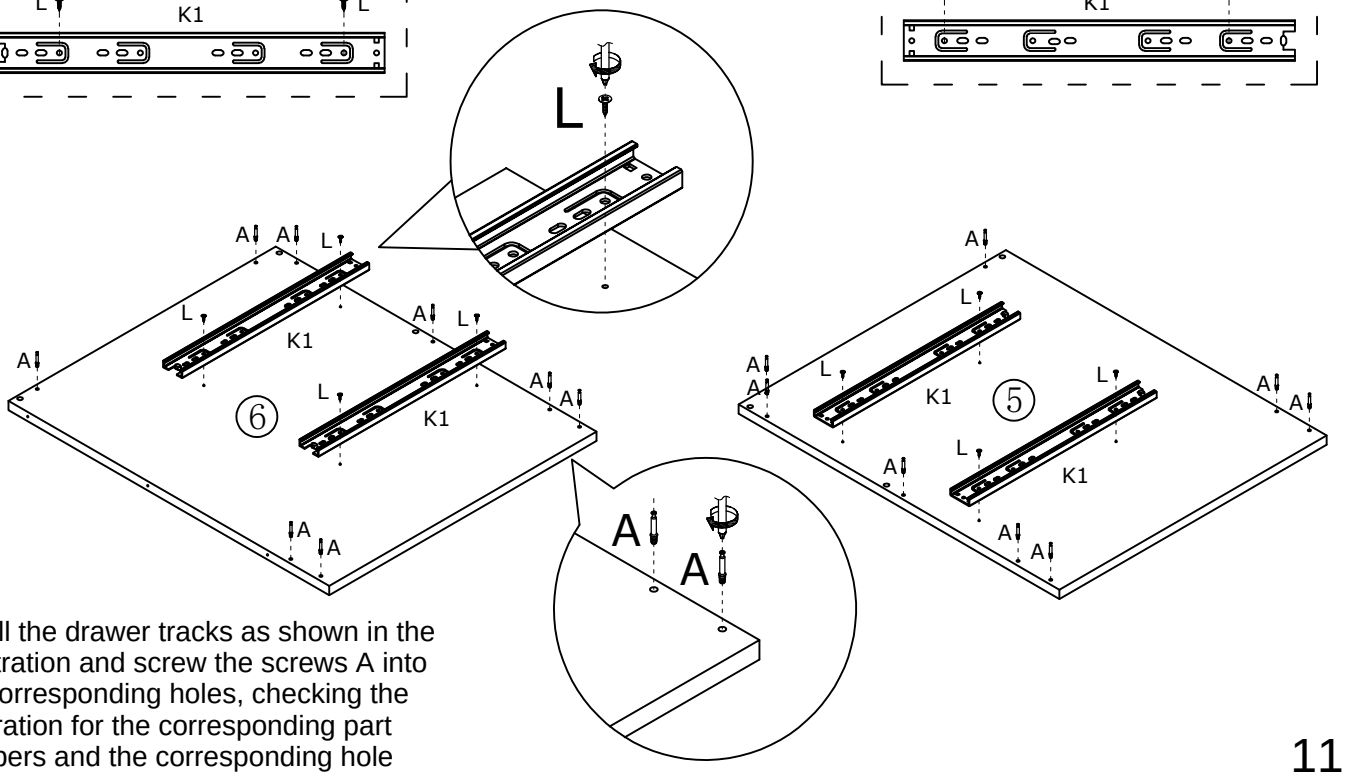

Install the drawer tracks as shown in the illustration and screw the screws A into the corresponding holes, checking the illustration for the corresponding part numbers and the corresponding hole positions.

7

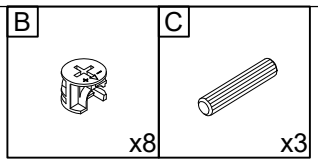

Insert the dowel (C) into the corresponding hole as shown, then insert the cam screw (B) and turn it to the right to secure it. Pleas eensure that both the dowel and screw are locked vertically and are not tilted.

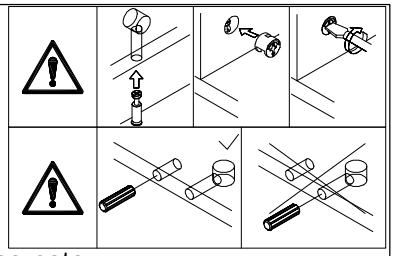

Please note:
This is the backplane mounting guide hole. Please ensure that it is facing the same direction during installation. Subsequent installations should follow the same orientation.

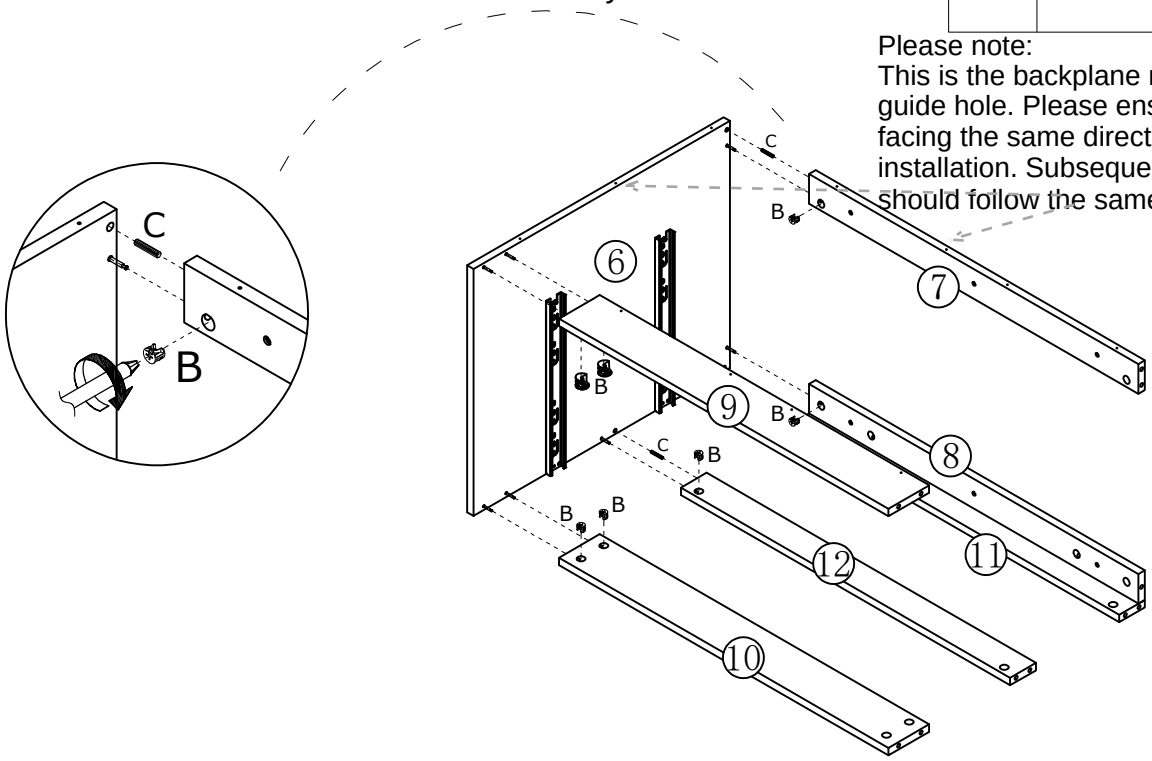

8

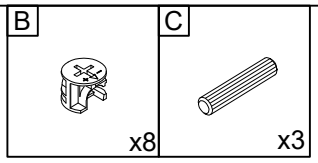

Insert the dowel (C) into the corresponding hole as shown, then insert the cam screw (B) and turn it to the right to secure it. Pleas eensure that both the dowel and screw are locked vertically and are not tilted.

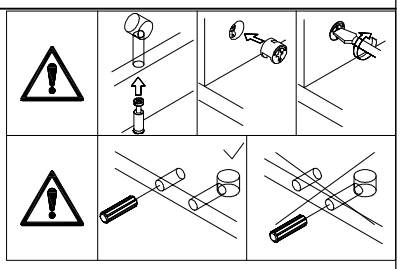

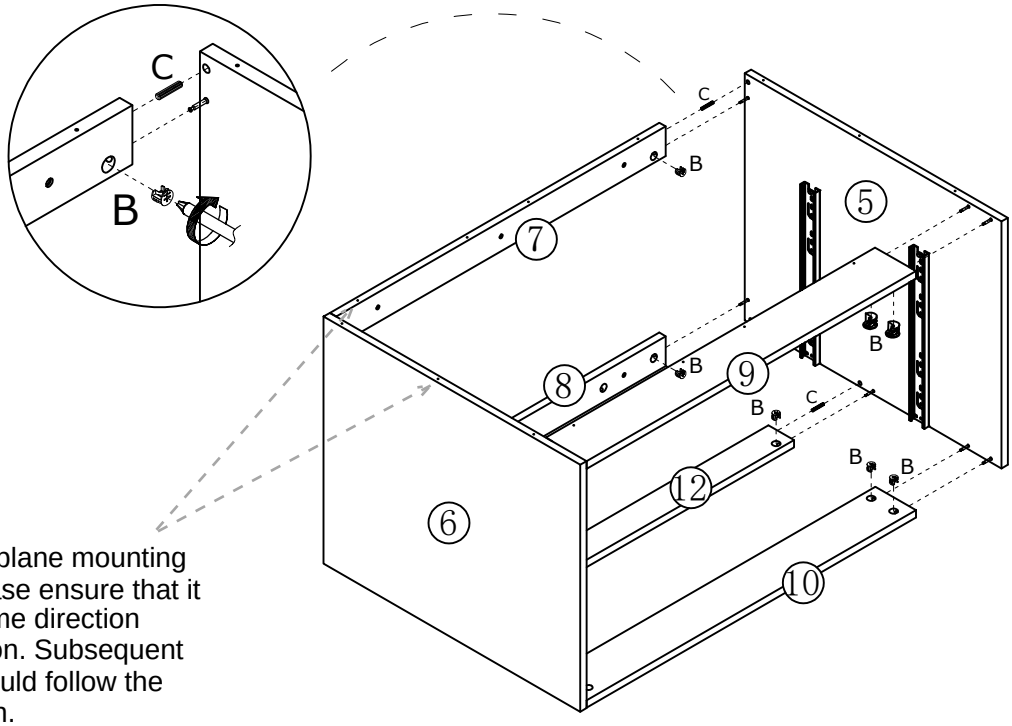

Please note:
This is the backplane mounting guide hole. Please ensure that it is facing the same direction during installation. Subsequent installations should follow the same orientation.

9

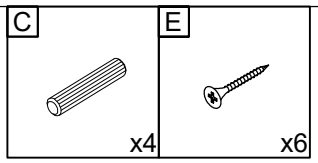

Insert the dowels (C) into the corresponding holes, then attach and secure the upper and lower parts using screws (E). Be sure to refer to the illustration for the correct hole positions.

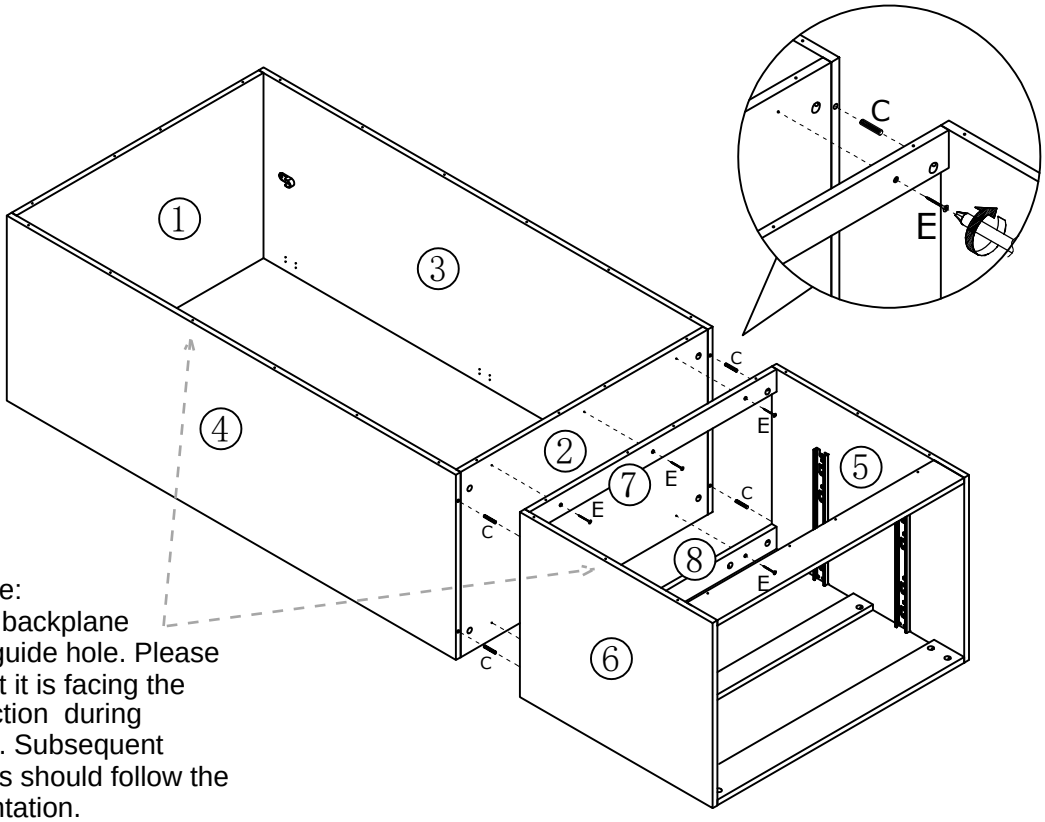

Please note:
This is the backplane mounting guide hole. Please ensure that it is facing the same direction during installation. Subsequent installations should follow the same orientation.

10

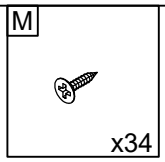

Install the back panel as shown in the illustration.

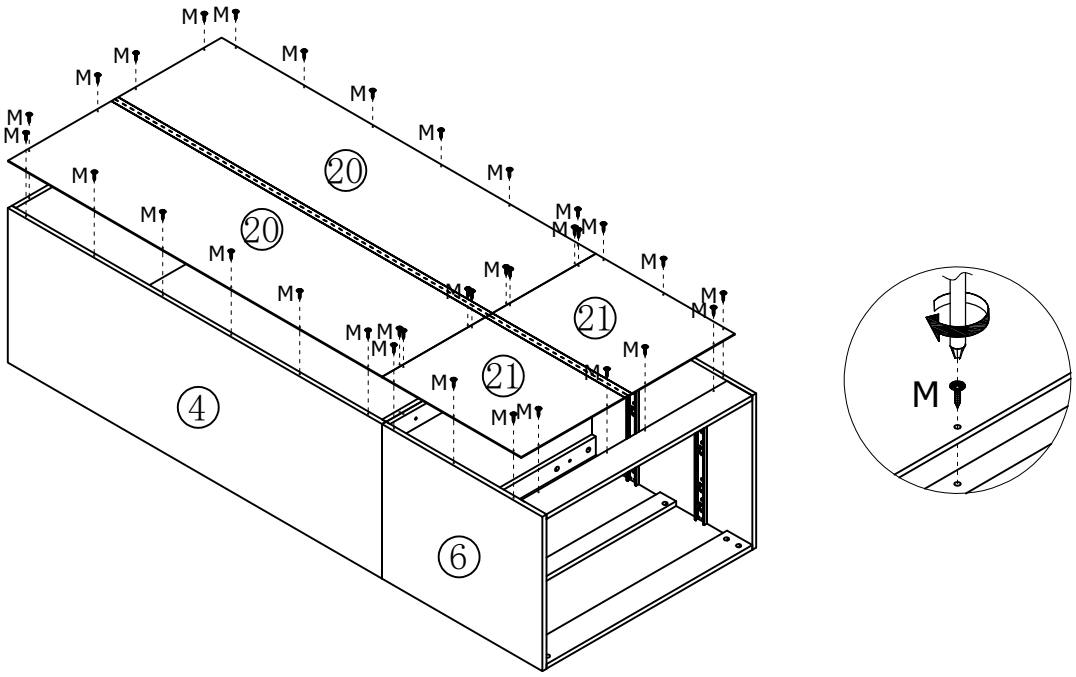

11

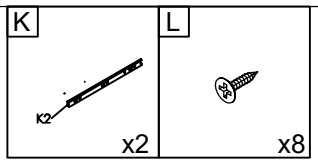

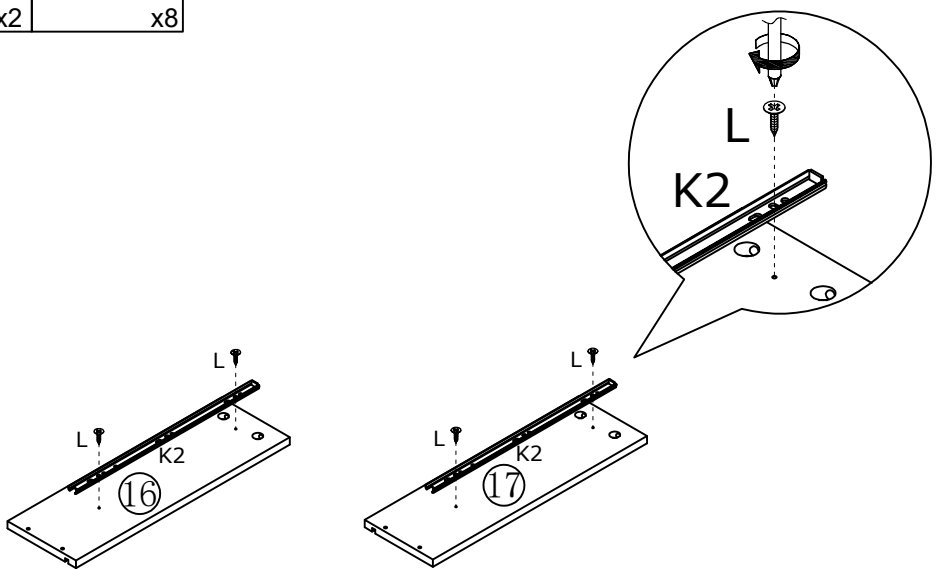

x2

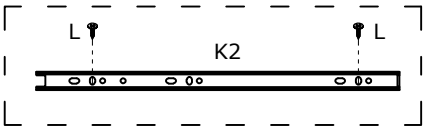

12

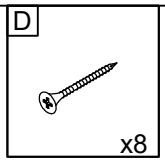

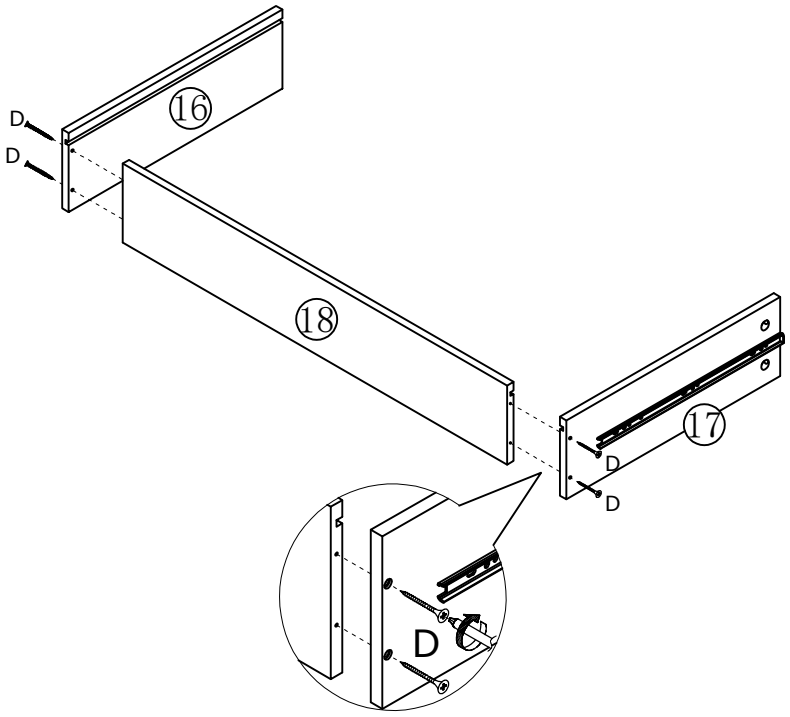

x2

13

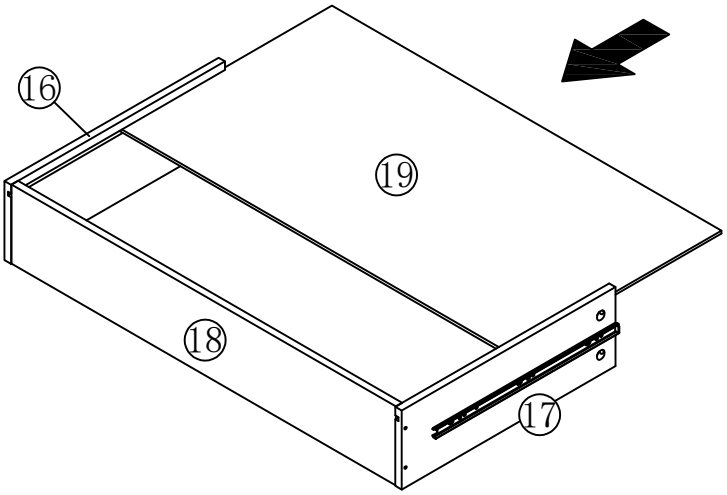

x2

14

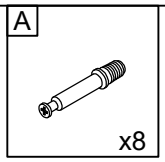

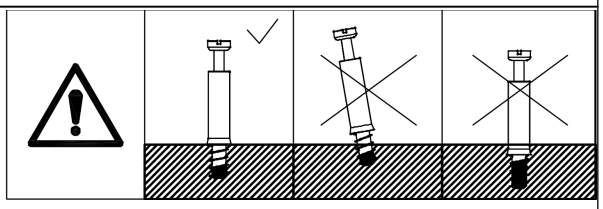

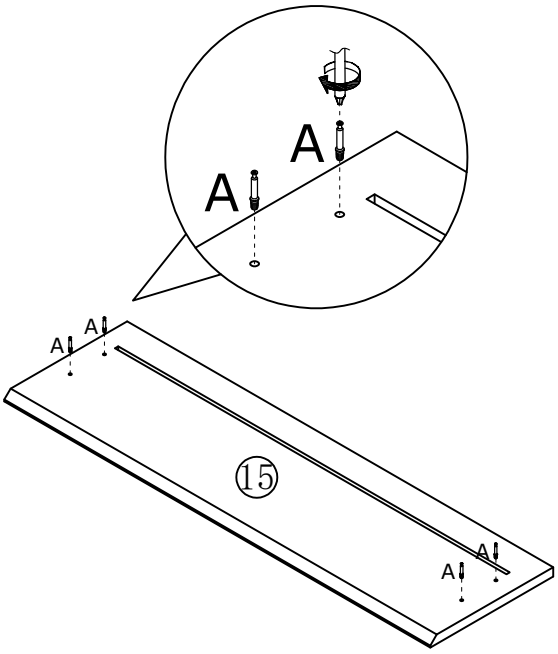

x2

15

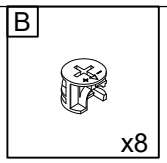

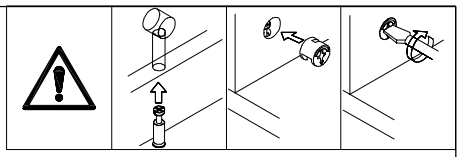

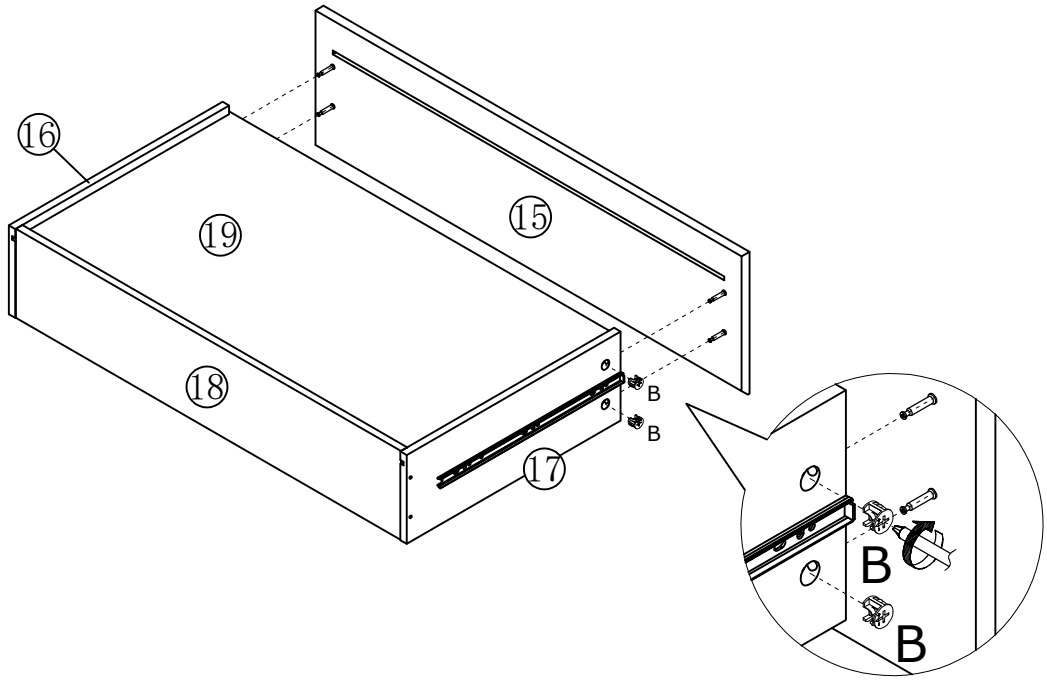

x2

16

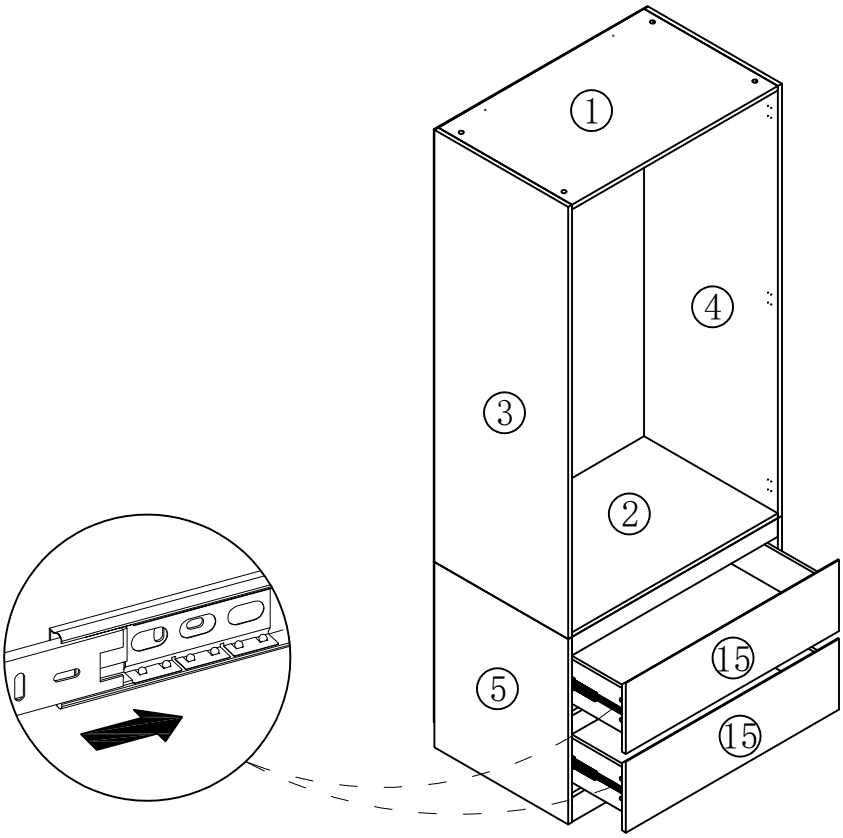

17

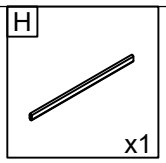

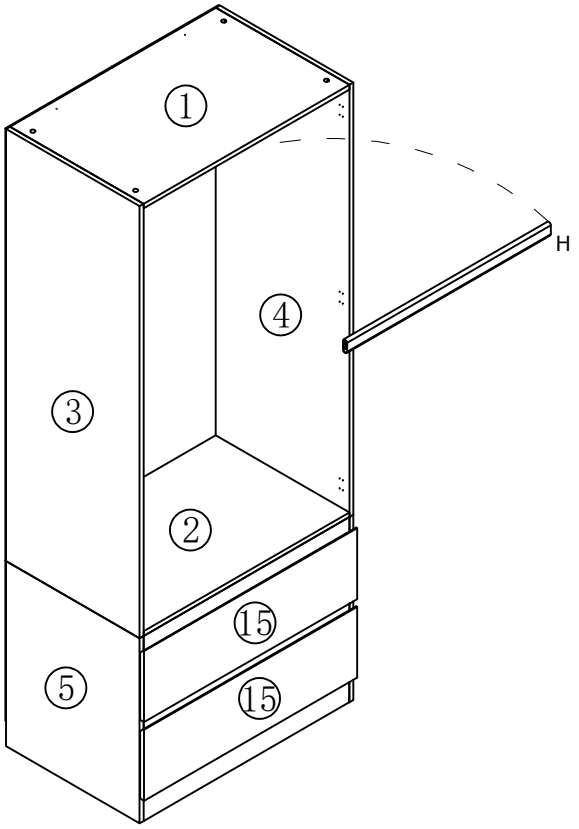

18

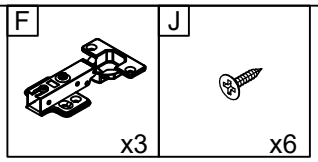

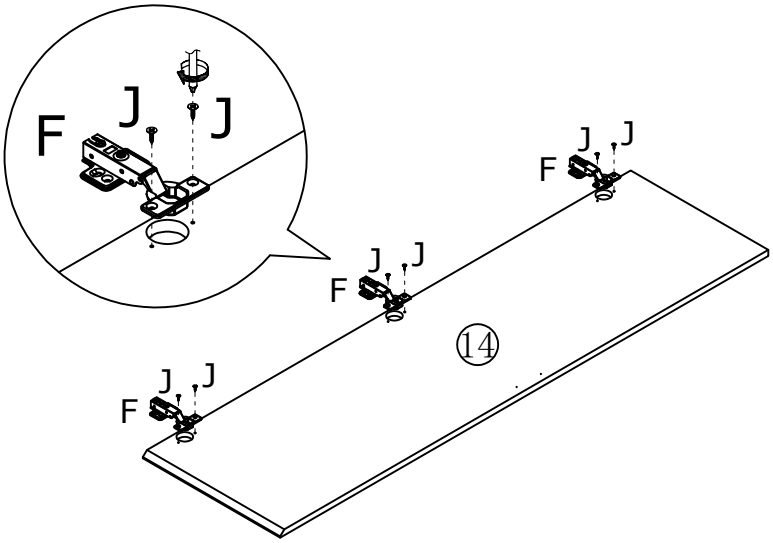

19

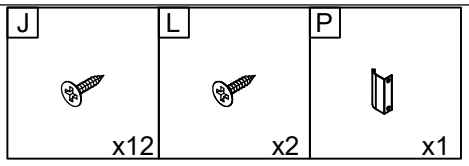

Cabinet Door Installation: Please refer to the picture. Two people should work together.

The door handle (P) can be installed or left off based on your personal preference.

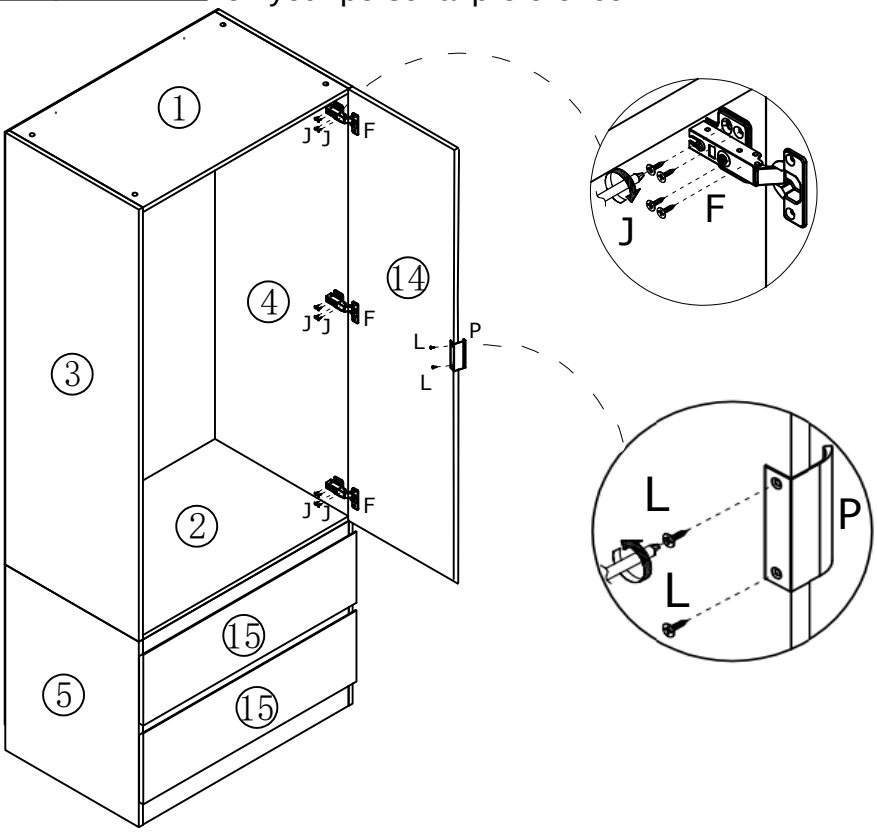

20

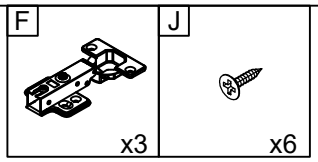

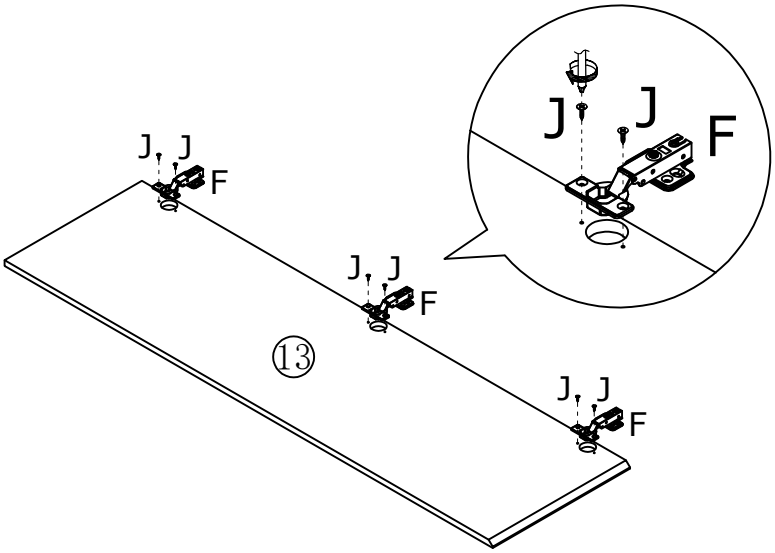

21

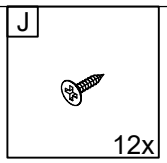

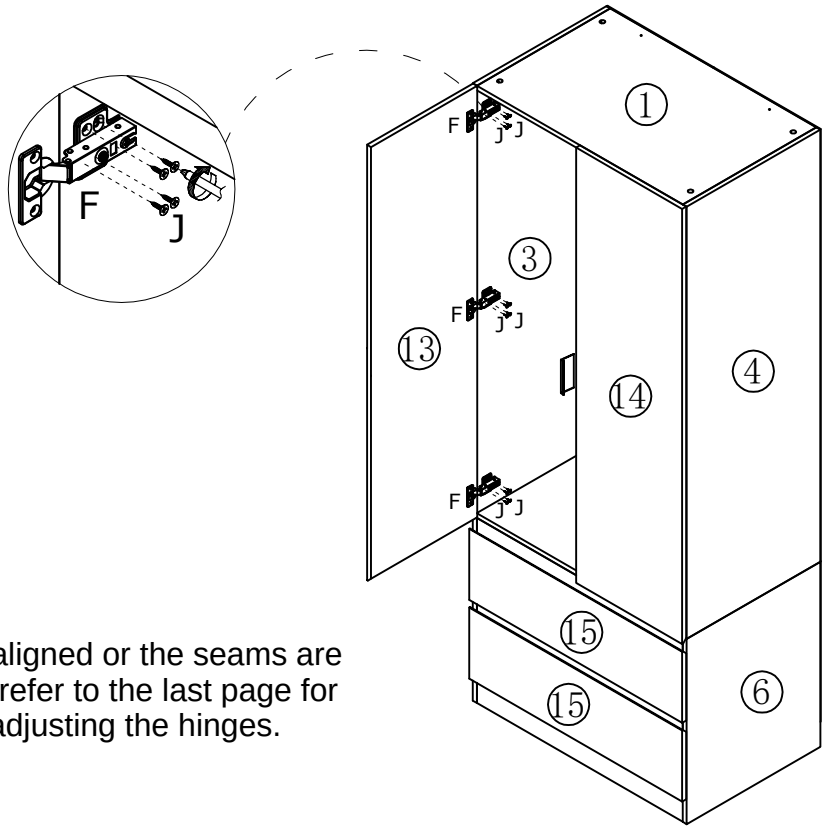

If the door isn't aligned or the seams are uneven, please refer to the last page for instructions on adjusting the hinges.

22

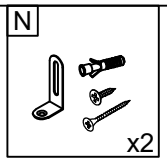

Attach wall anchors to the wall as shown for safety and stability.

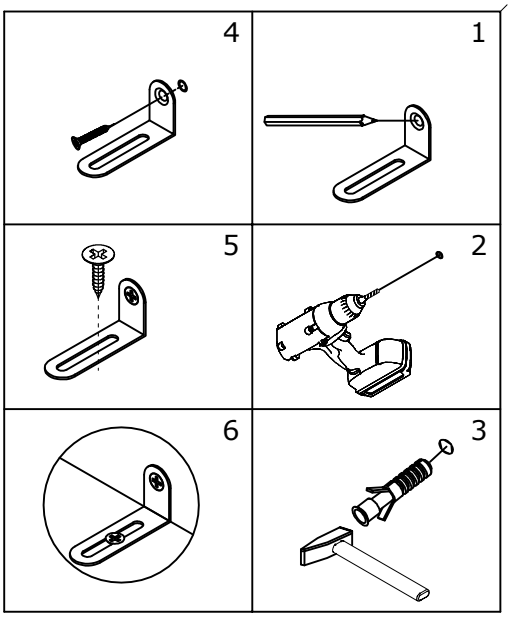

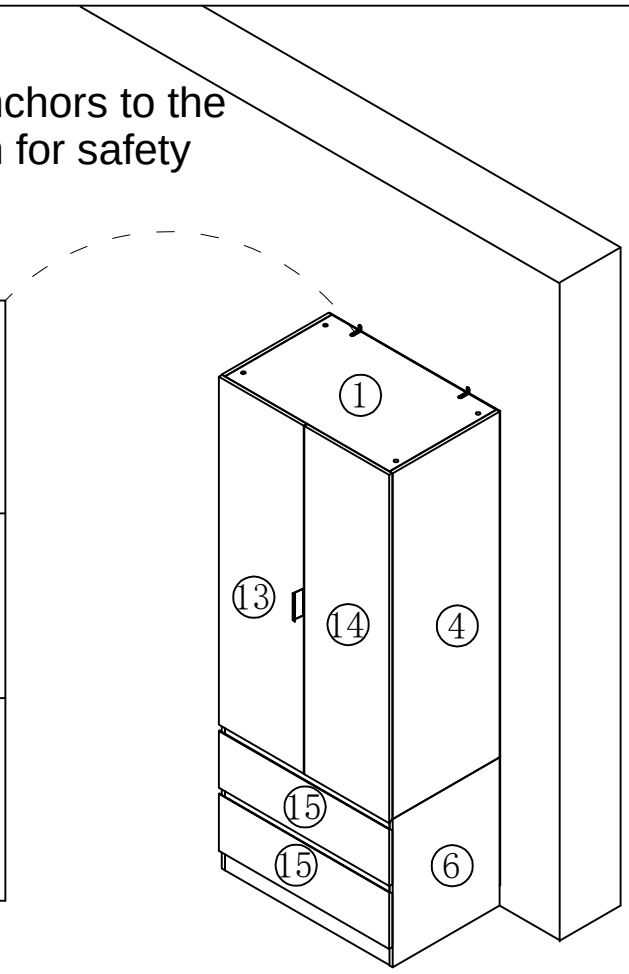

23 If the door clearance is uneven, adjust the cabinet door according to the illustration. If you continue to have difficulties with the adjustment, please reach out to us for assistance.

Turn this screw left or right to adjust the glass door up or down.

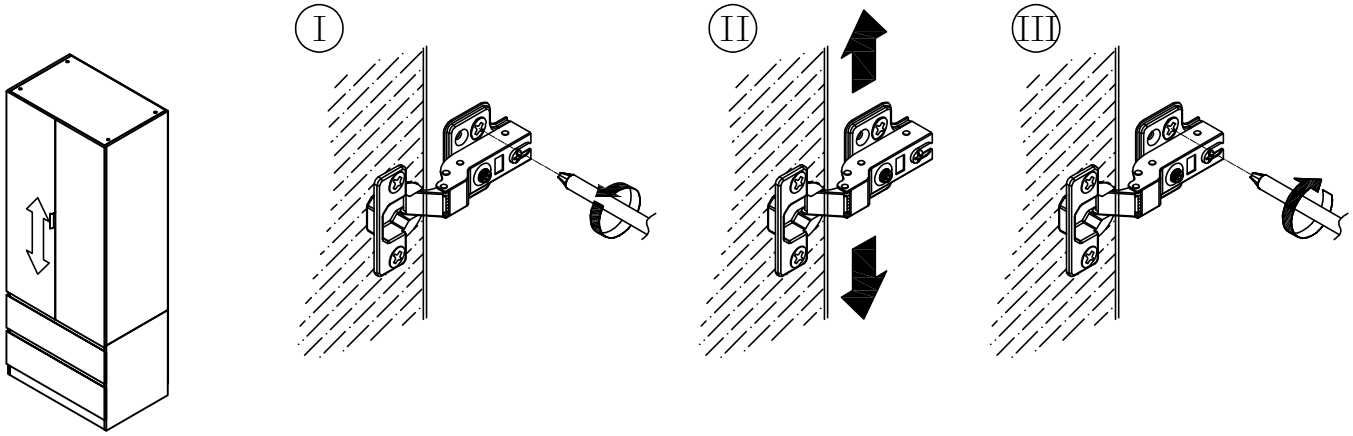

Turn this screw left or right to adjust the gap between the glass door and the cabinet.

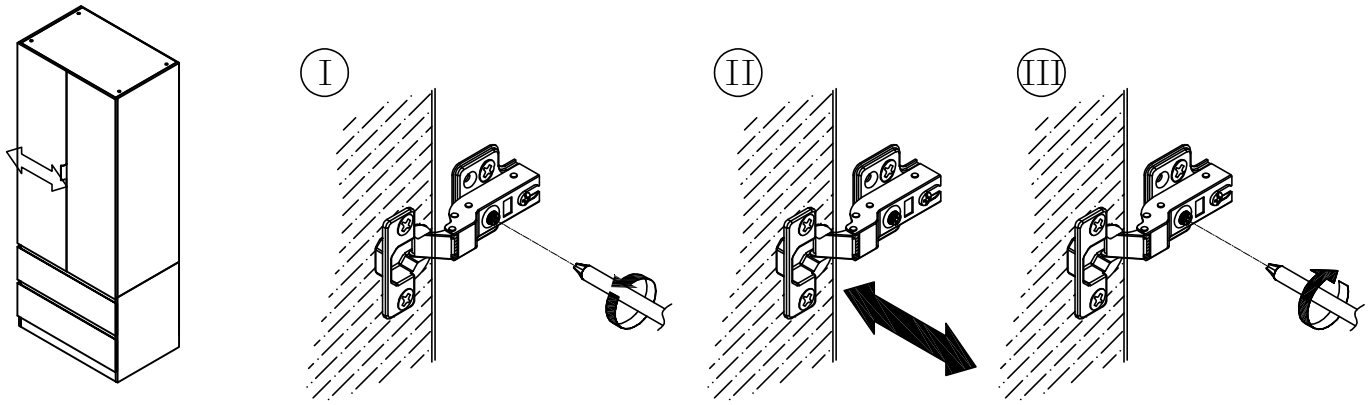

Turn the screw left or right to adjust the glass door to the left or right.

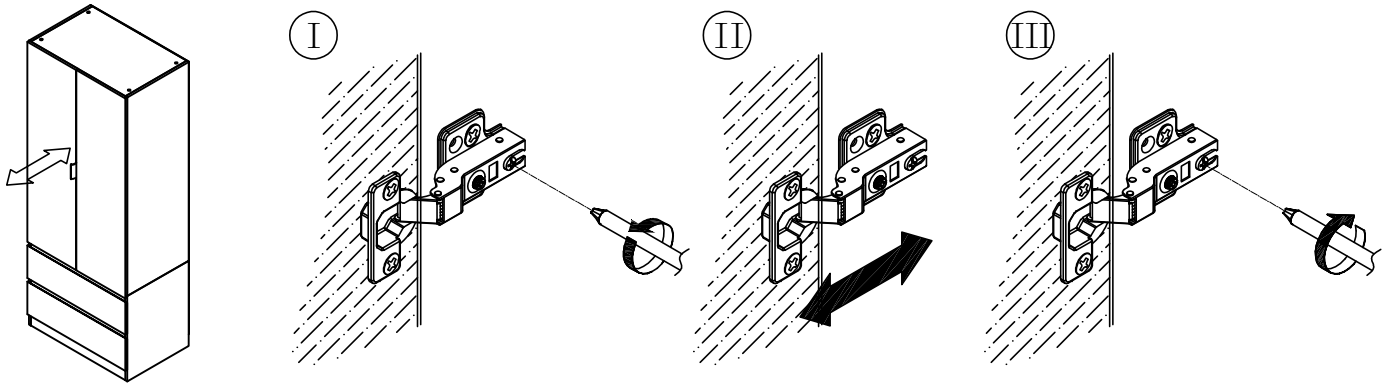

WARRANTY

WARRANTY CLAIMS

- There is a 30-day warranty for broken furniture or any other problems that cause improper function. The warranty starts from the date of purchase and requires proof of purchase.
- The product must be used in accordance with the provided instructions.
- For other reasons, if the furniture needs to be returned, it must be cleaned, dried, and operated within 30 days of receipt.

Type of Warranty Claim

- Failure to follow the furniture instructions will invalidate the warranty. Please note, the warranty does not cover damage during installation, but does cover damage incurred during transportation.

Scope of Responsibility

- We are not responsible for misuse, user damage, or loss of parts during the installation of the furniture. Additionally, any damage or scratches incurred after use are not covered by the warranty.

WARRANTY CLAIMS

- **The warranty for products purchased in the U.S. covers the following areas:**
- Sheet parts: 1 month from the date of purchase.
- Electrical parts: 1 month from the date of purchase.

RETURNS

Changed your mind and need to return your item?

Please follow the instructions below:

- If you have purchased the item and simply changed your mind, please follow the retailer's return instructions.

DEFECTIVE ITEMS

- If your item is defective in any way, meaning it doesn't work but you cannot identify the cause, please first consult our FAQ section at, as there may be a simple solution to the issue.

DAMAGED ITEMS

- If you receive an order with obvious shipping damage, we suggest refusing the delivery. If the delivery has already been accepted and you later find shipping damage, please follow the specific instructions provided by the retailer.
- In all cases, please keep all packaging materials and paperwork related to the order.
- Please be aware that if you dispose of packaging materials or attempt to return the item without contacting the retailer, you may risk losing your chance to file a claim, and you may not receive credit for the return.