ASSEMBLY INSTRUCTIONS

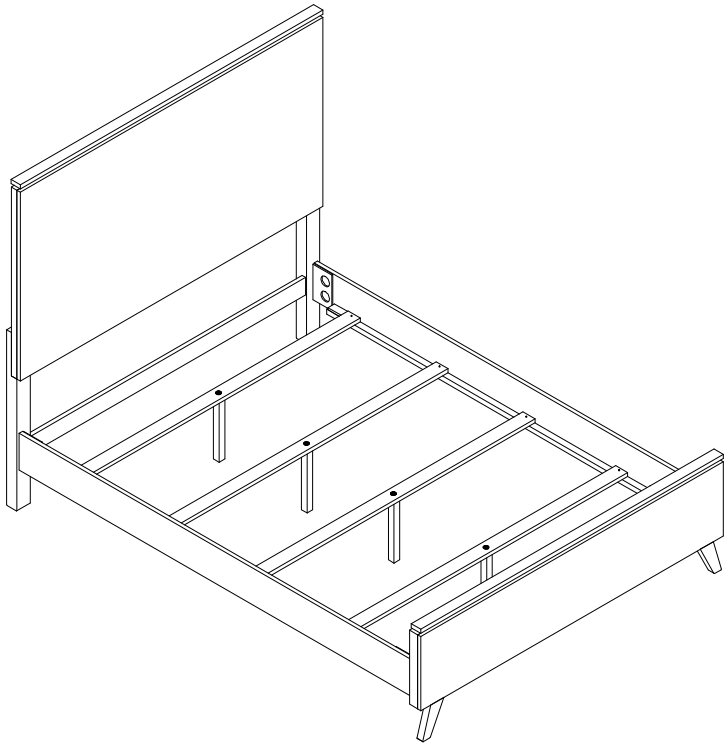

Queen Bed

ASSEMBLY INSTRUCTIONS

ASSEMBLY TIPS:

1. Remove hardware from box and sort by size.
2. Please check to see that all hardware and parts are present prior to start of assembly.
3. Please follow attached instructions in the same sequence as numbered to assure fast & easy assembly.

WARNING!

1. Don't attempt to repair or modify parts that are broken or defective. Please contact the store immediately.
2. This product is for home use only and not intended for commercial establishments.

ASSEMBLY TIME	30 MINUTES

PARTS IDENTIFICATION

B1 (BOX 1)

A	HEADBOARD PANEL		1PC
B	HEADBOARD BOTTOM RAIL	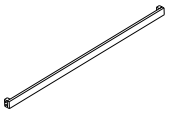	1PC
C	RIGHT HEADBOARD LEG		1PC
D	LEFT HEADBOARD LEG		1PC

B2 (BOX 2)

E	FOOTBOARD PANEL		1PC
F	RIGHT FOOTBOARD LEG WITH "F" LABEL		1PC
G	LEFT FOOTBOARD LEG WITH "G" LABEL		1PC

B3 (BOX 3)

H	BED RAIL	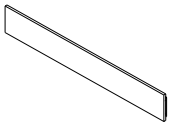	2PCS
I	BED SLAT SUPPORT WITH LEVELER		4PCS
J	BED SLAT		4PCS
HB	224601Q(B1) FROM BOX 1 HEADBOARD COMPLETE	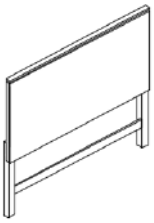	1PC
FB	224601Q(B2) FROM BOX 2 FOOTBOARD COMPLETE		1PC

ASSEMBLY INSTRUCTIONS

ASSEMBLY TIPS:

1. Remove hardware from box and sort by size.
2. Please check to see that all hardware and parts are present prior to start of assembly.
3. Please follow attached instructions in the same sequence as numbered to assure fast & easy assembly.

WARNING!

1. Don't attempt to repair or modify parts that are broken or defective. Please contact the store immediately.
2. This product is for home use only and not intended for commercial establishments.

HARDWARE IDENTIFICATION

Z-B1 (BOX 1) - HARDWARE PACK IS LOCATED IN 224601Q(B1)

1	BOLT (Ø5/16" x 45MM- BLK)	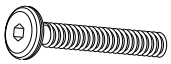	8PCS	2	LOCK WASHER (Ø5/6" - BLK)		8PCS
3	FLAT WASHER (Ø5/16" - BLK)		8PCS	4	ALLEN WRENCH (4MM - BLK)		1PC

Z-B2 (BOX 2) - HARDWARE PACK IS LOCATED IN 224601Q(B2)

5	BOLT (Ø5/16" x 45MM- BLK)	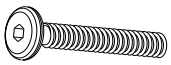	2PCS	6	LOCK WASHER (Ø5/6" - BLK)		2PCS
7	FLAT WASHER (Ø5/16" - BLK)		2PCS	8	ALLEN WRENCH (4MM - BLK)		1PC

Z-B3 (BOX 3) - HARDWARE PACK IS LOCATED IN 224601Q(B3)

9	THREADED BOLT (Ø5/16" x 100mm - RBLK)		8PCS	10	HEX NUT (Ø5/16" x 14mm -BLK)		8PCS
11	WRENCH (14MM - BLK)	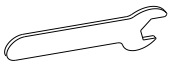	1PC	12	HALF ROUND NUT (Ø5/16" - BLK)		8PCS
13	FLAT HEAD SCREW (Ø4 x 30mm - BLK)	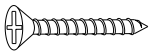	8PCS	14	BOLT (Ø1/4" x 30MM- BLK)	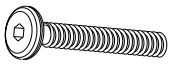	4PCS
15	ALLEN WRENCH (4MM - BLK)		1PC				

NOTE:

Phillips head screw driver is required in the assembly process; however, manufacturer does not provide this item.

ASSEMBLY INSTRUCTIONS

STEP 1

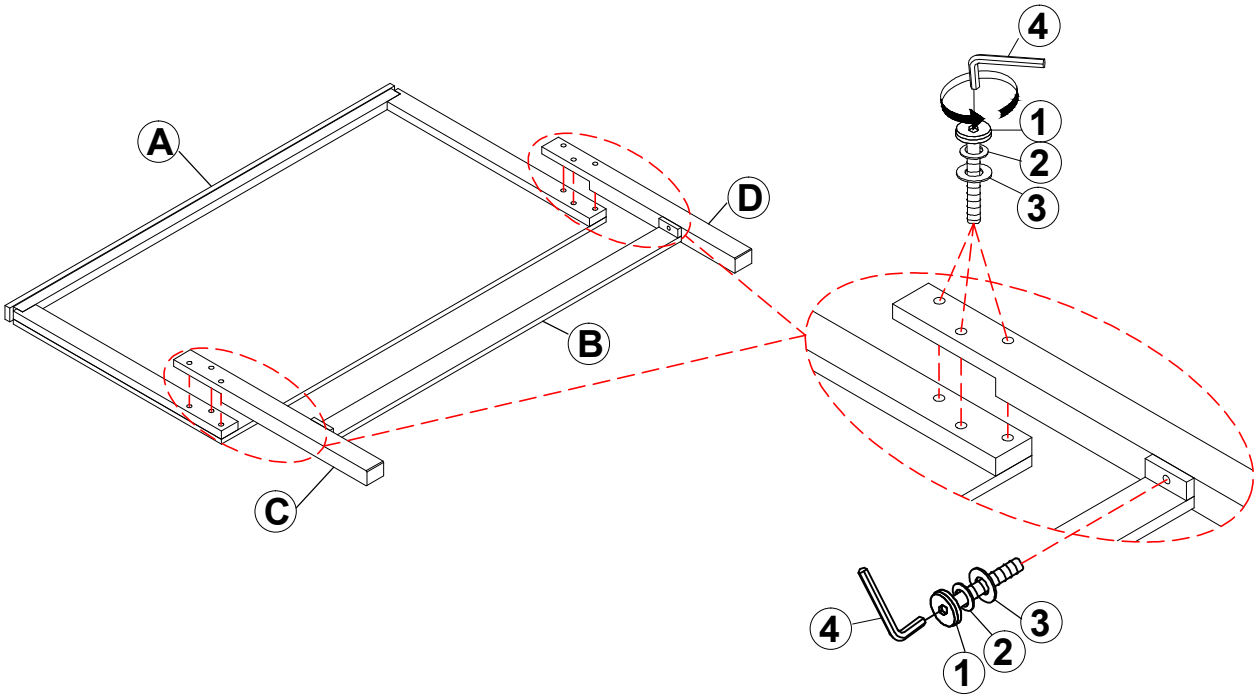

STEP 2

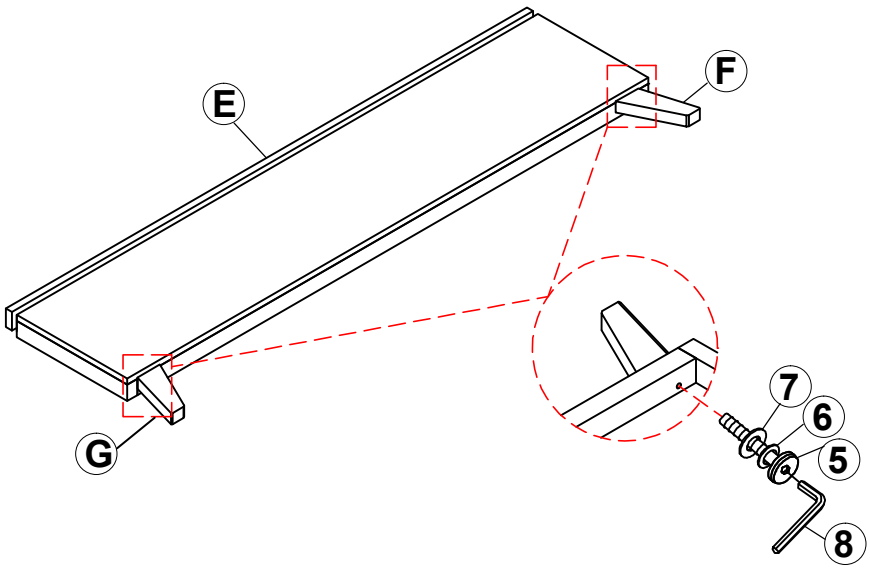

ASSEMBLY INSTRUCTIONS

STEP 3

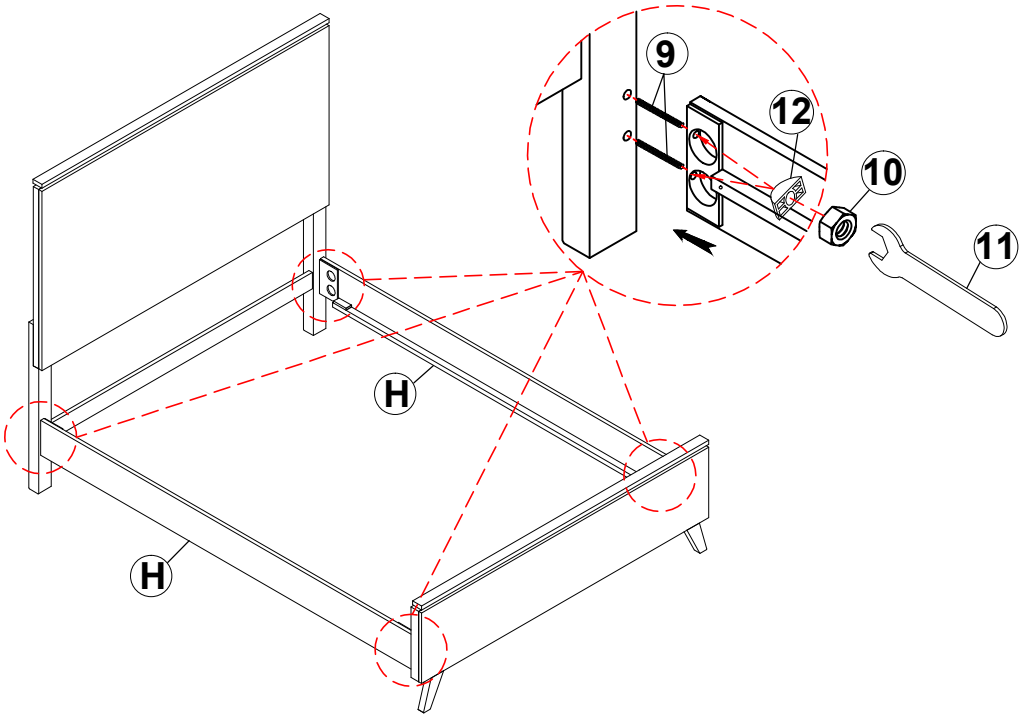

STEP 4

COMPLETE

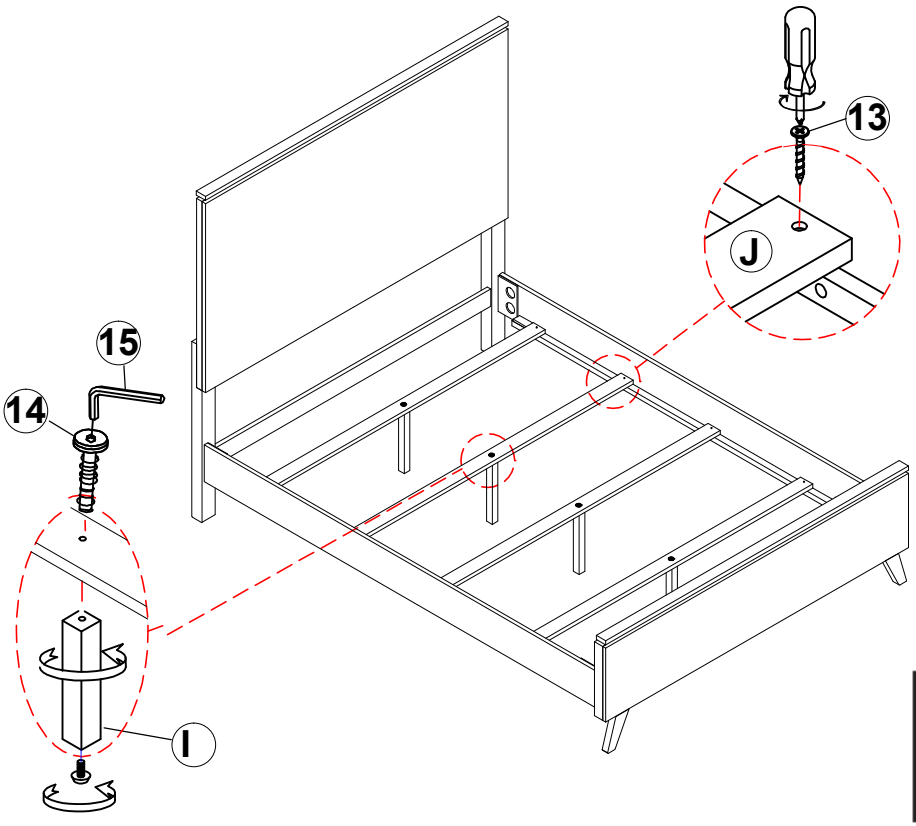

Inner Size: 61.00"W X 82.00"D

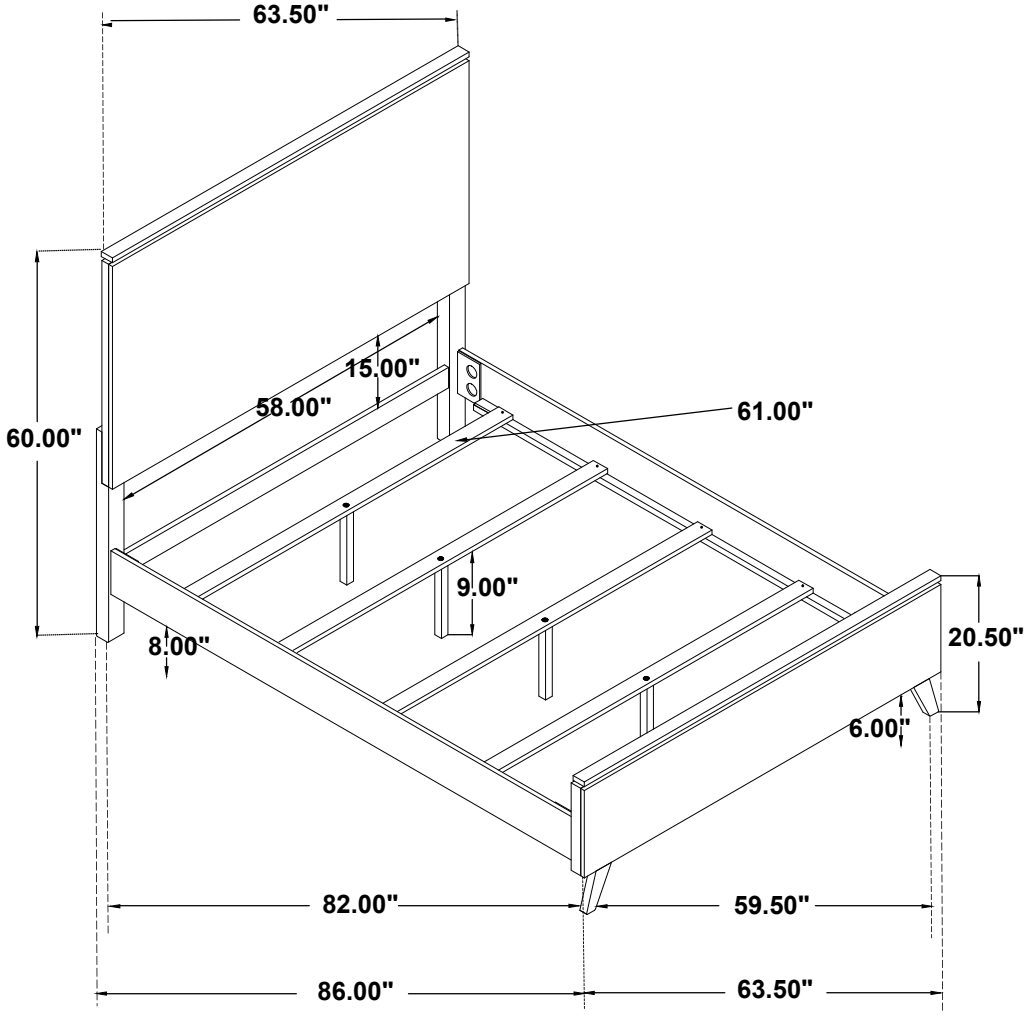

Note: Dimension tolerance ±5%