Installation & Assembly

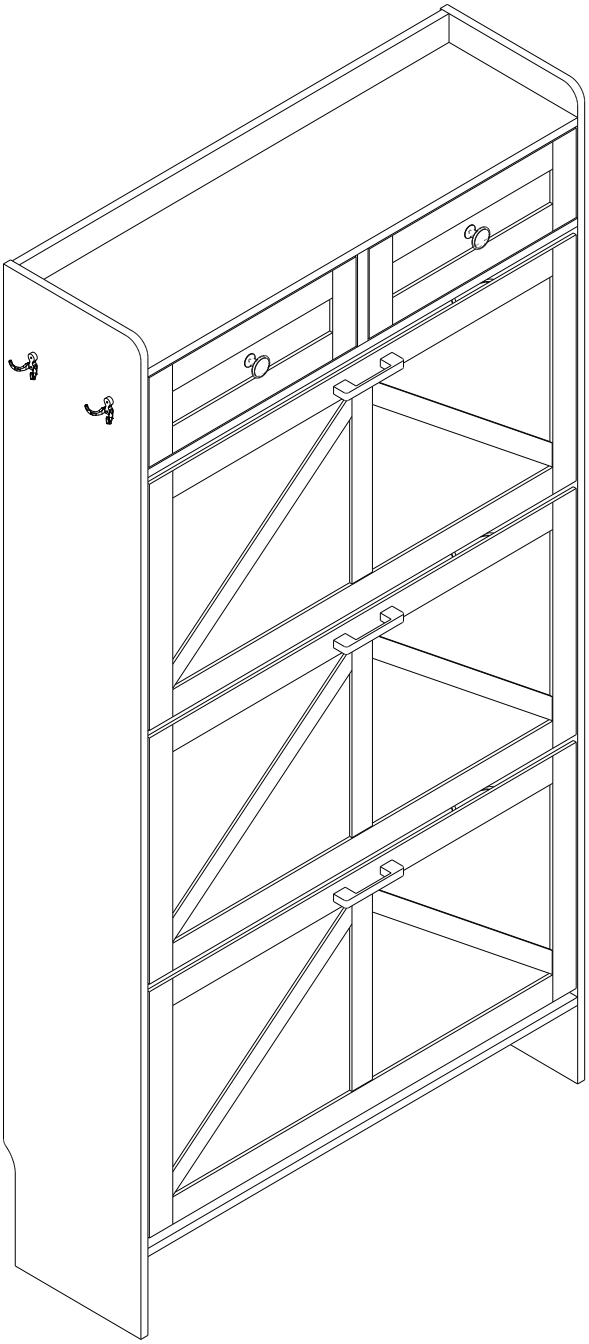

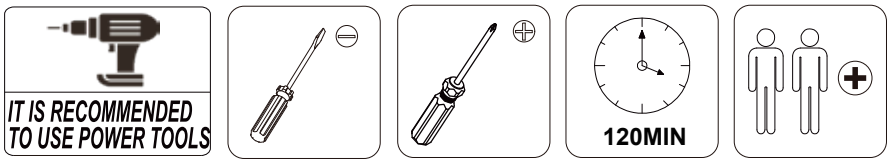

***EN*_IMPORTANT, RETAIN FOR FUTURE REFERENCE: READ CAREFULLY.**

.THANK YOU FOR PURCHASE! .

FREE REPLACEMENT PARTS AVAILABLE!

---NEED HELP WITH YOUR FURNITURE?---

If you're experiencing any issues—whether due to shipping, assembly, or any other reason —we're here to help.
For any damaged or missing components, we're happy to provide FREE replacement parts.

WANT TO CONTACT US ?

- Log in to your account.
- Go to “Your Orders" and locate your furniture order.
- Click on“Get Help with Order” to send us a message directly.

Our customer support team is ready to assist you and we will respond within 12-24 HOURS to resolve your concerns quickly!

NO.	PARTS	QTY	SPARE
①	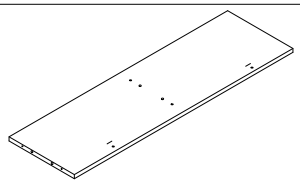	x1	
②	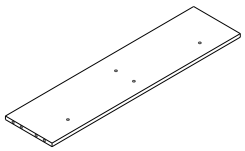	x1	
③	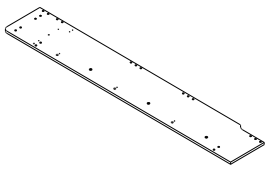	x1	
④	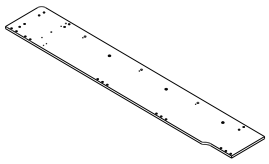	x1	
⑤	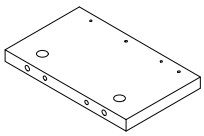	x1	
⑥	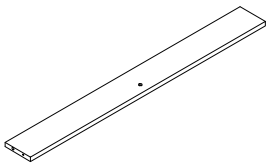	x1	
⑦	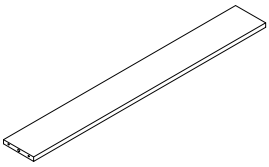	x3	
⑧	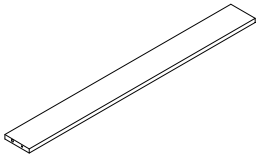	x1	
⑨	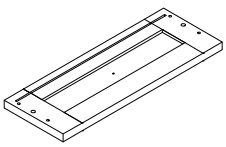	x2	
⑩	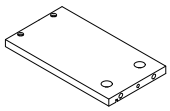	x2	

NO.	PARTS	QTY	SPARE
⑪	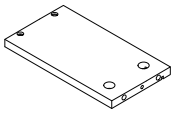	x2	
⑫	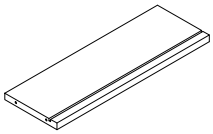	x2	
⑬	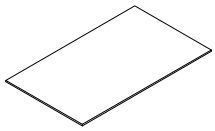	x2	
⑭	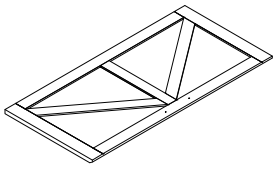	x3	
⑮	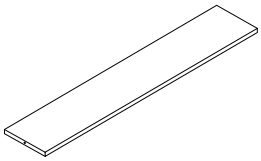	x3	
⑯	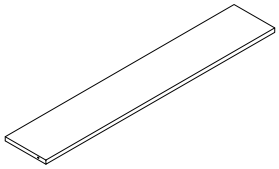	x6	

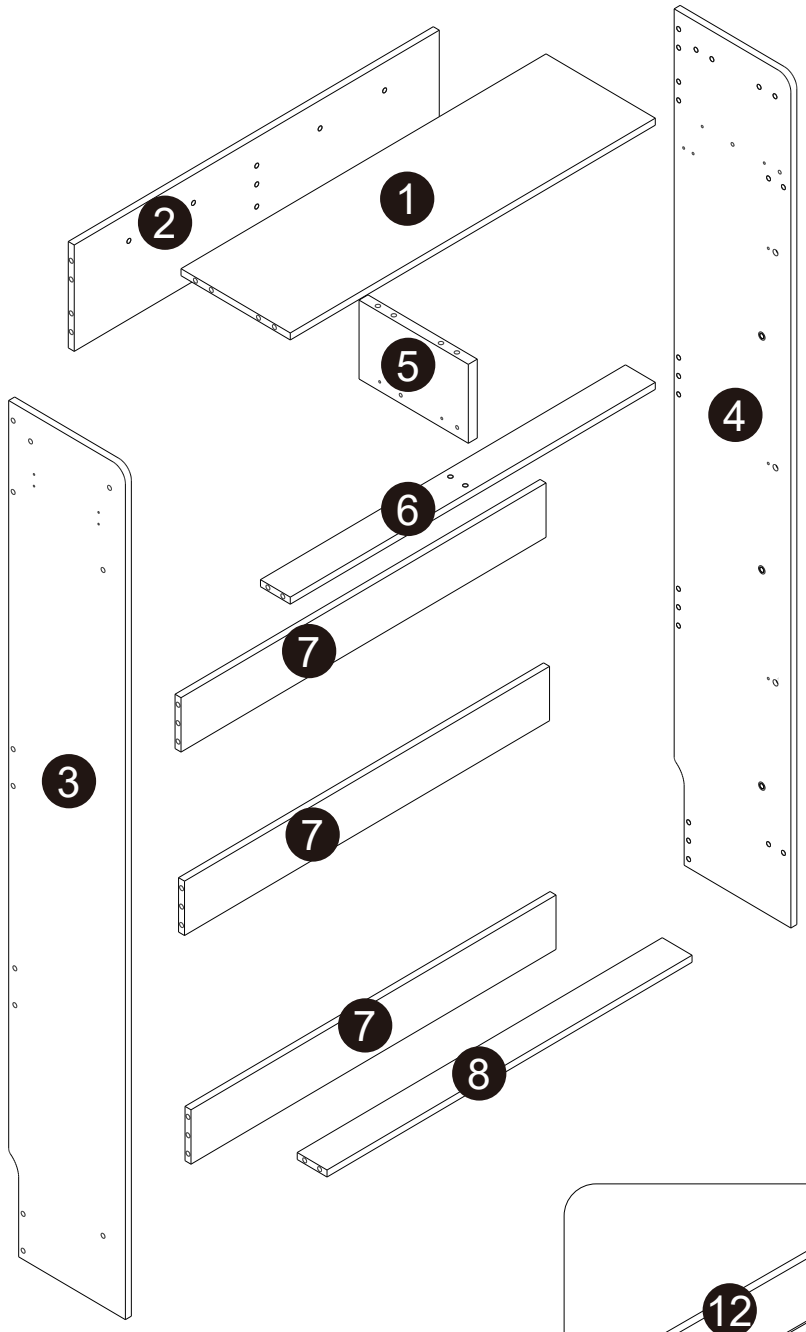
1
2
3
4
5
6
7
7
7
8

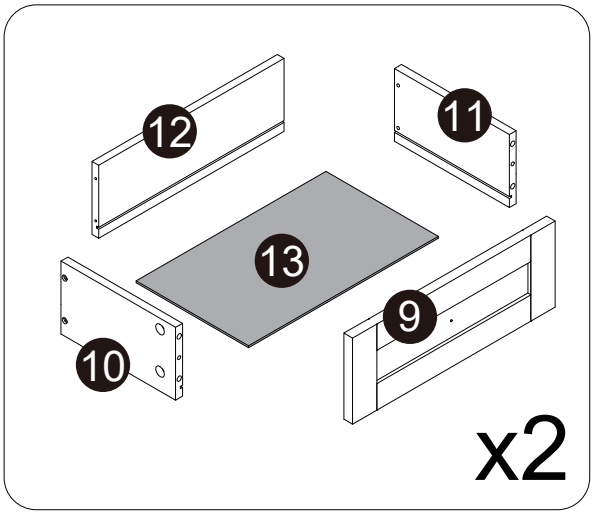
11
12
13
9
10
x2

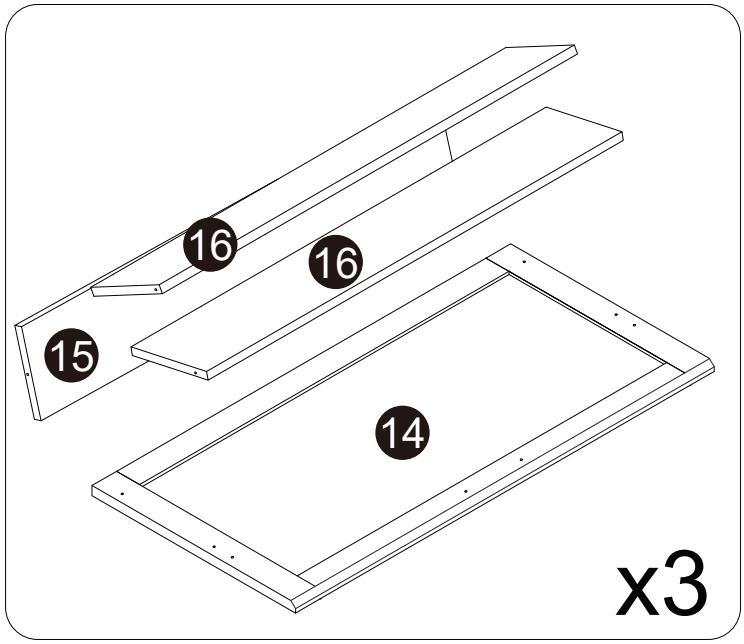
16
16
15
14
x3

HARDWARE

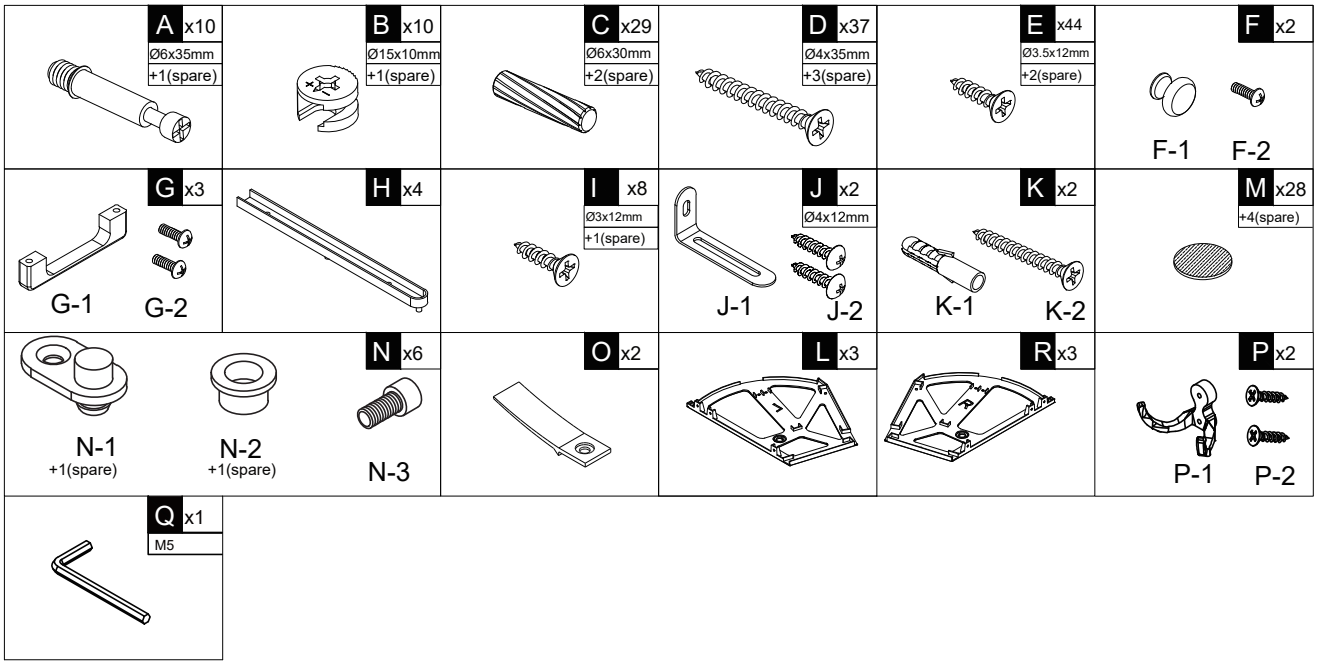
A x10
Ø6x35mm
+1(spare)
B x10
Ø15x10mm
+1(spare)
C x29
Ø6x30mm
+2(spare)
D x37
Ø4x35mm
+3(spare)
E x44
Ø3.5x12mm
+2(spare)
F x2
F-1
F-2
G x3
G-1
G-2
H x4
I x8
Ø3x12mm
+1(spare)
J x2
Ø4x12mm
J-1
J-2
K x2
K-1
K-2
M x28
+4(spare)
N x6
N-1
+1(spare)
N-2
+1(spare)
N-3
O x2
L x3
R x3
P x2
P-1
P-2
Q x1
M5

01

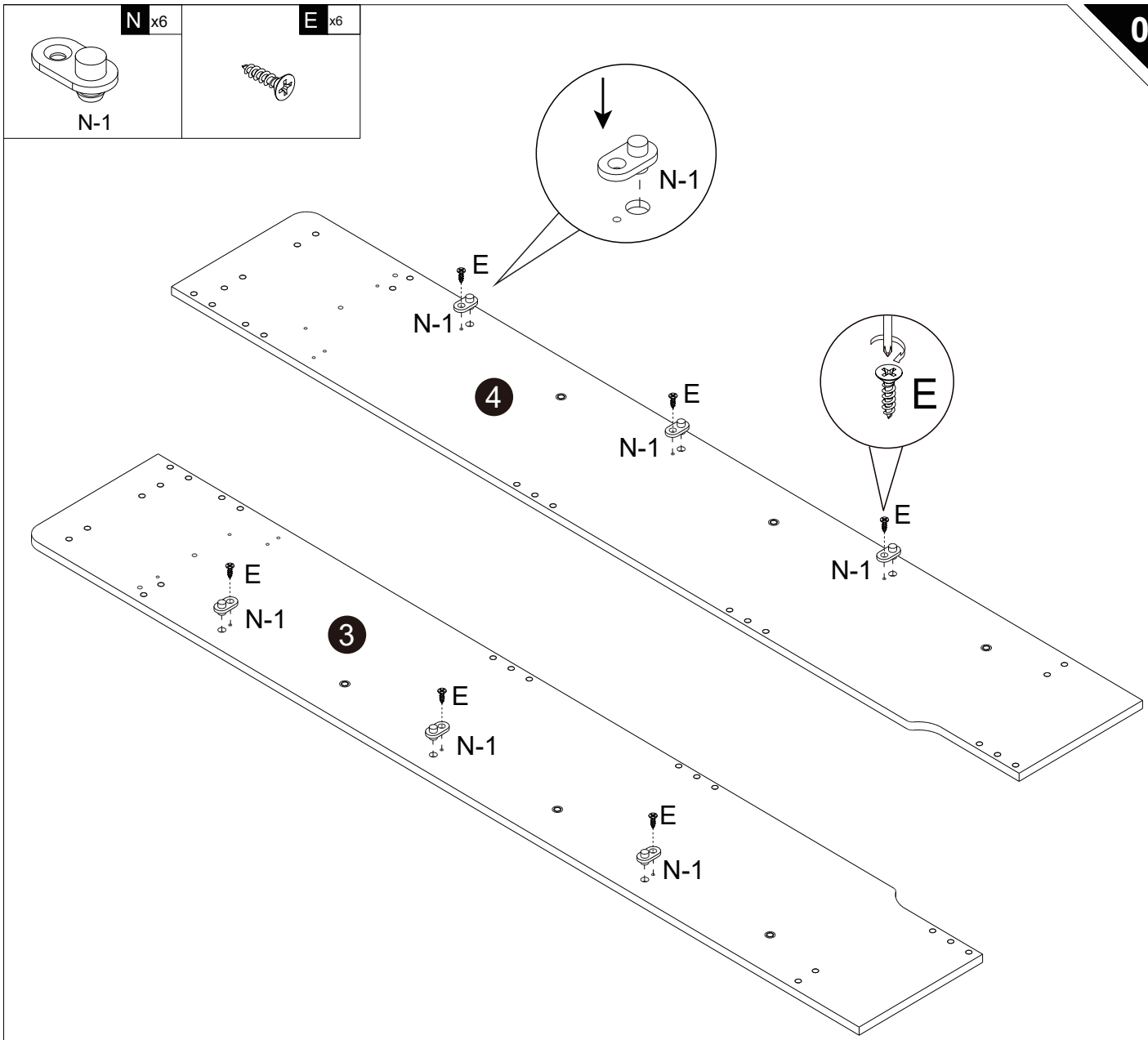
N x6
N-1
E x6
N-1
E
4
3
E

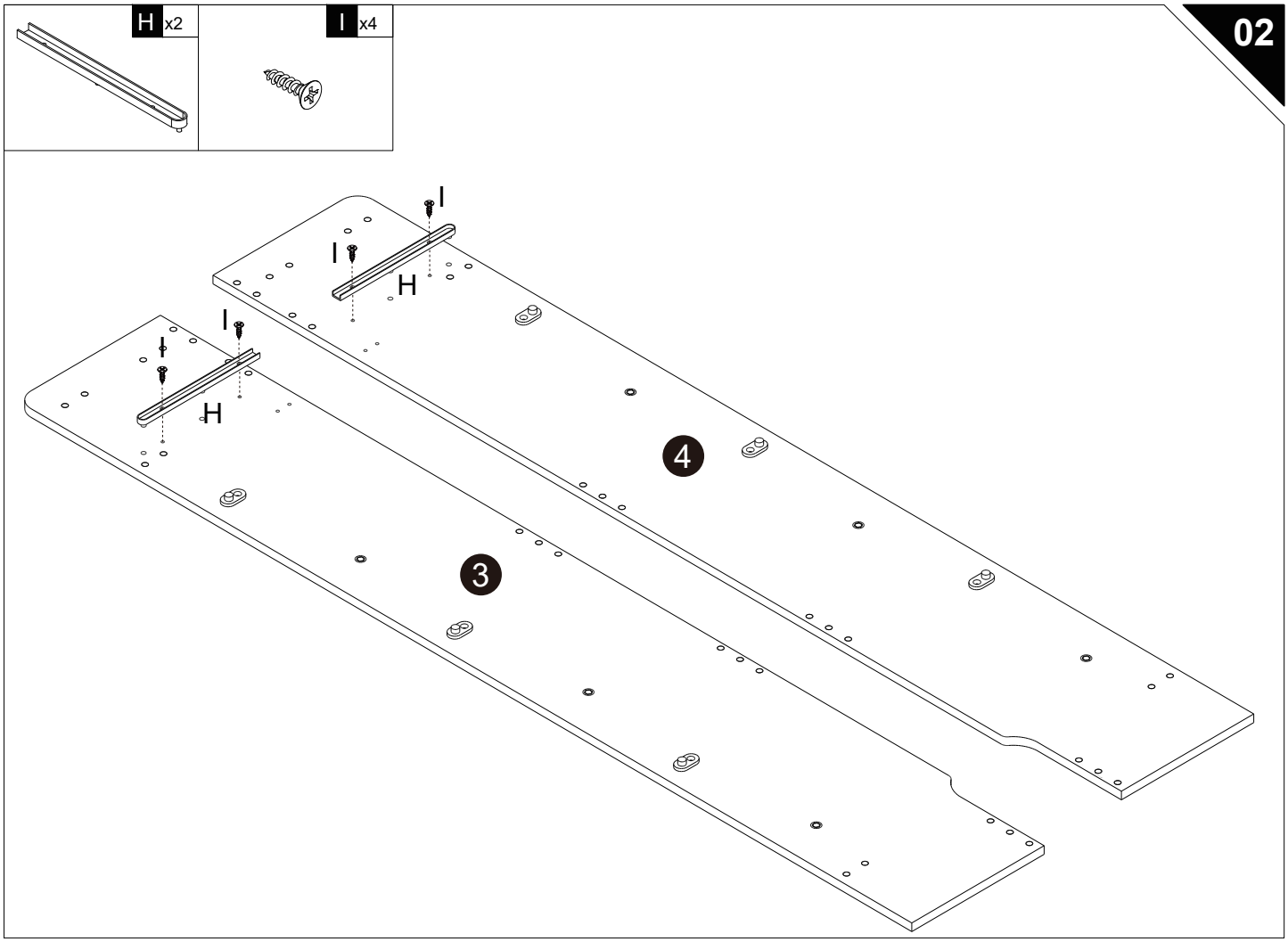
02
H x2
I x4
I
I
H
I
H
4
3

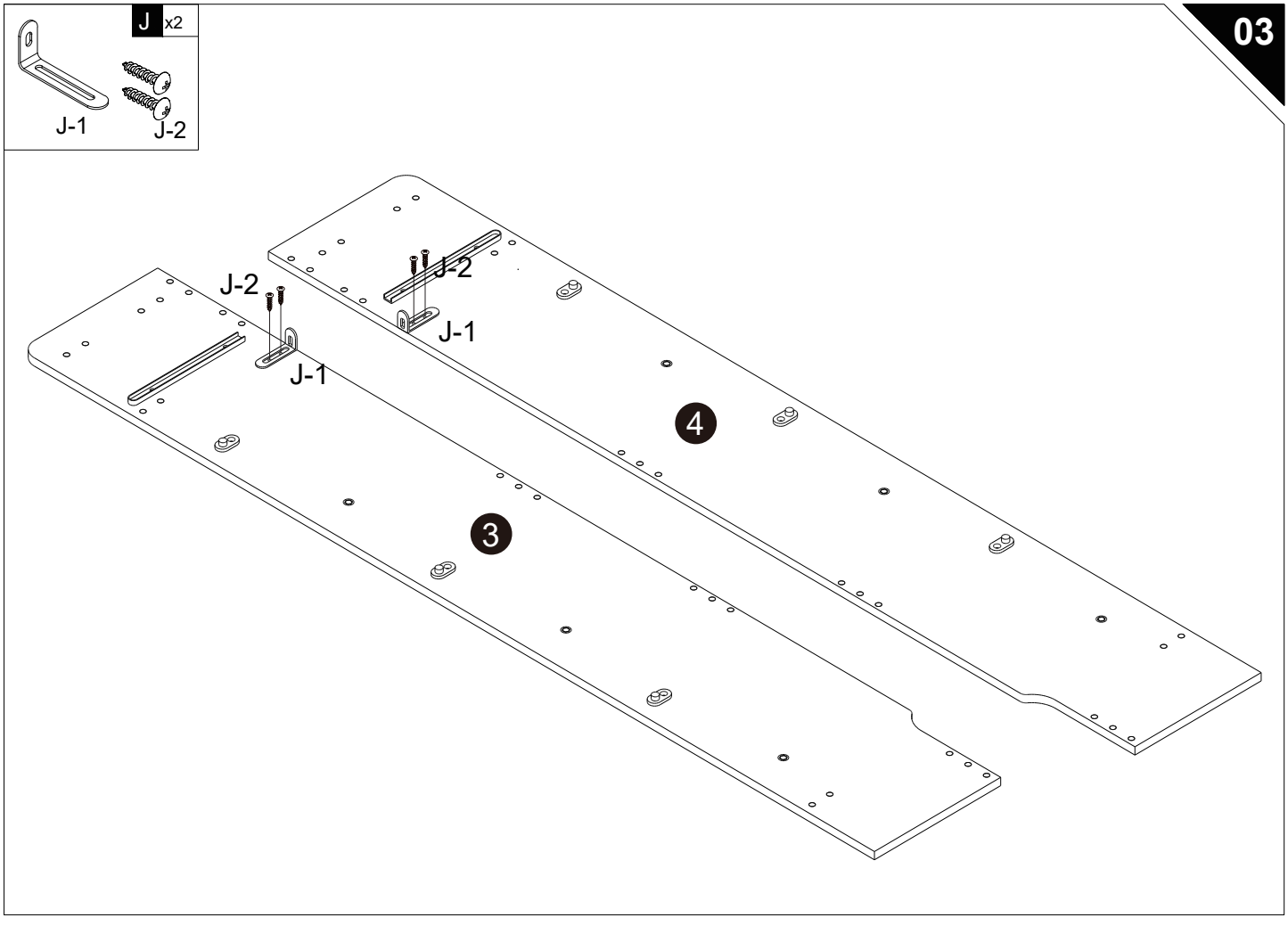
03
J x2
J-1
J-2
J-2
J-2
J-1
J-1
4
3

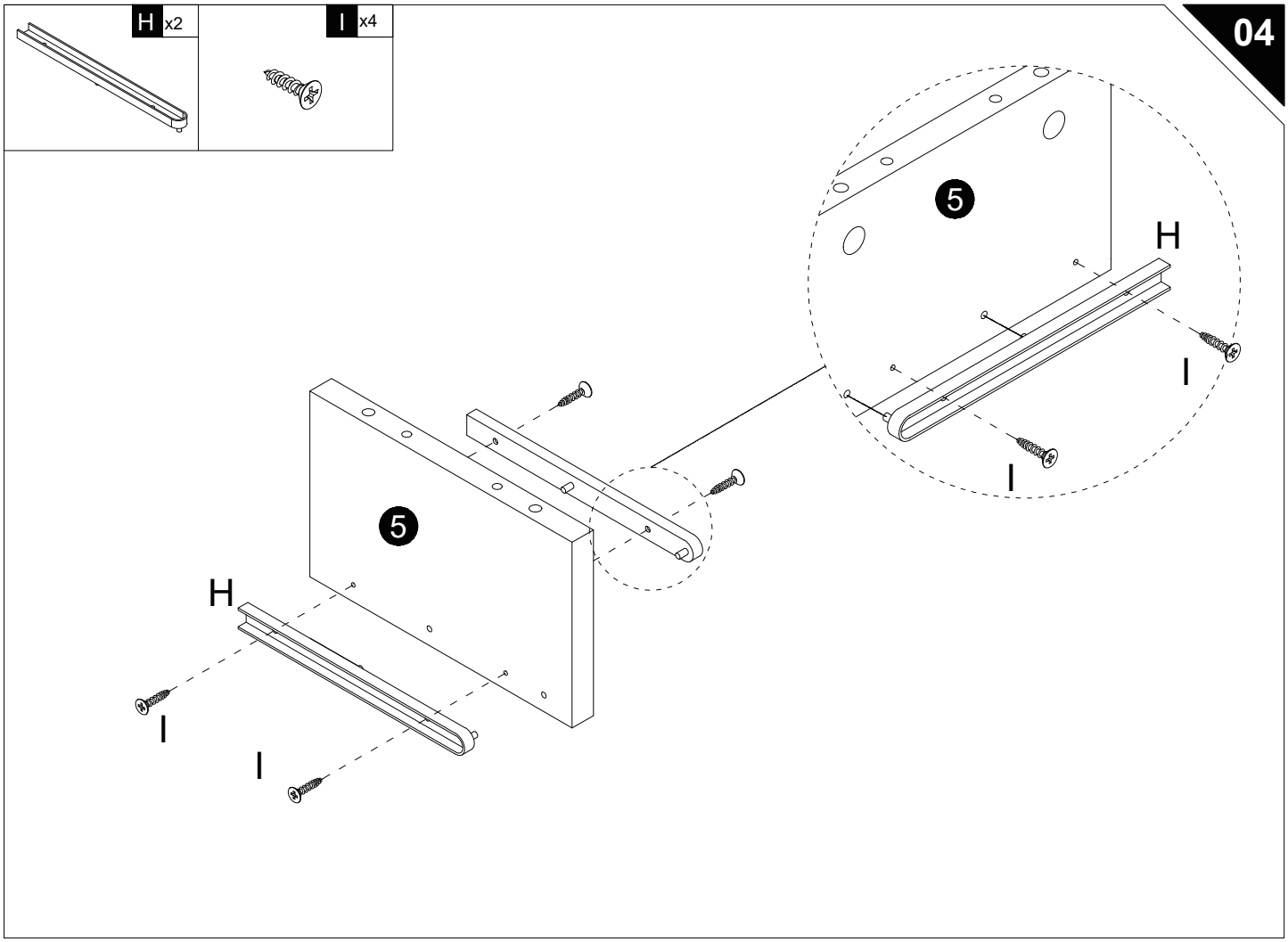
04
H x2
I x4
5
H
I
5
H
I
I

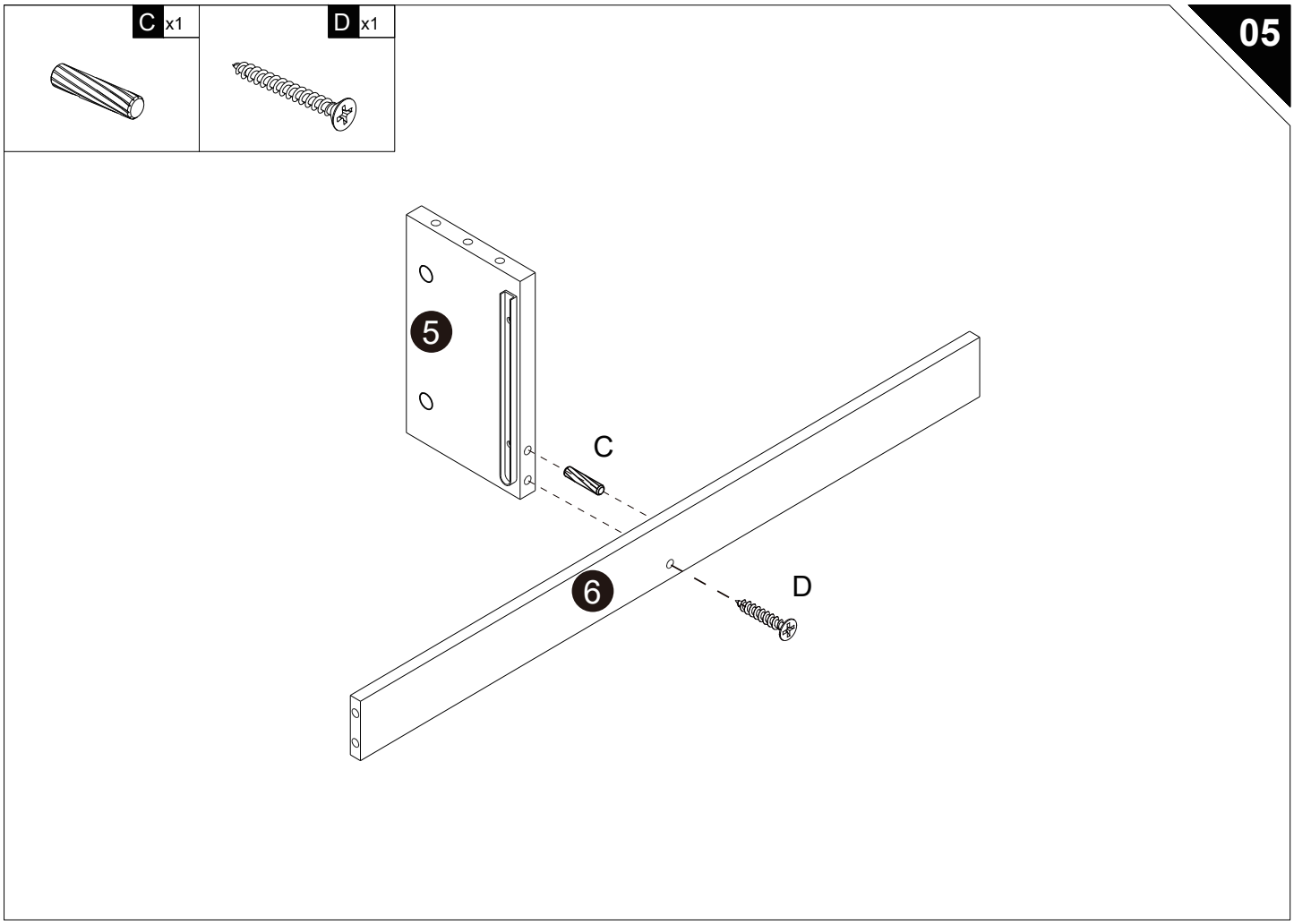
05
C x1
D x1
5
C
6
D

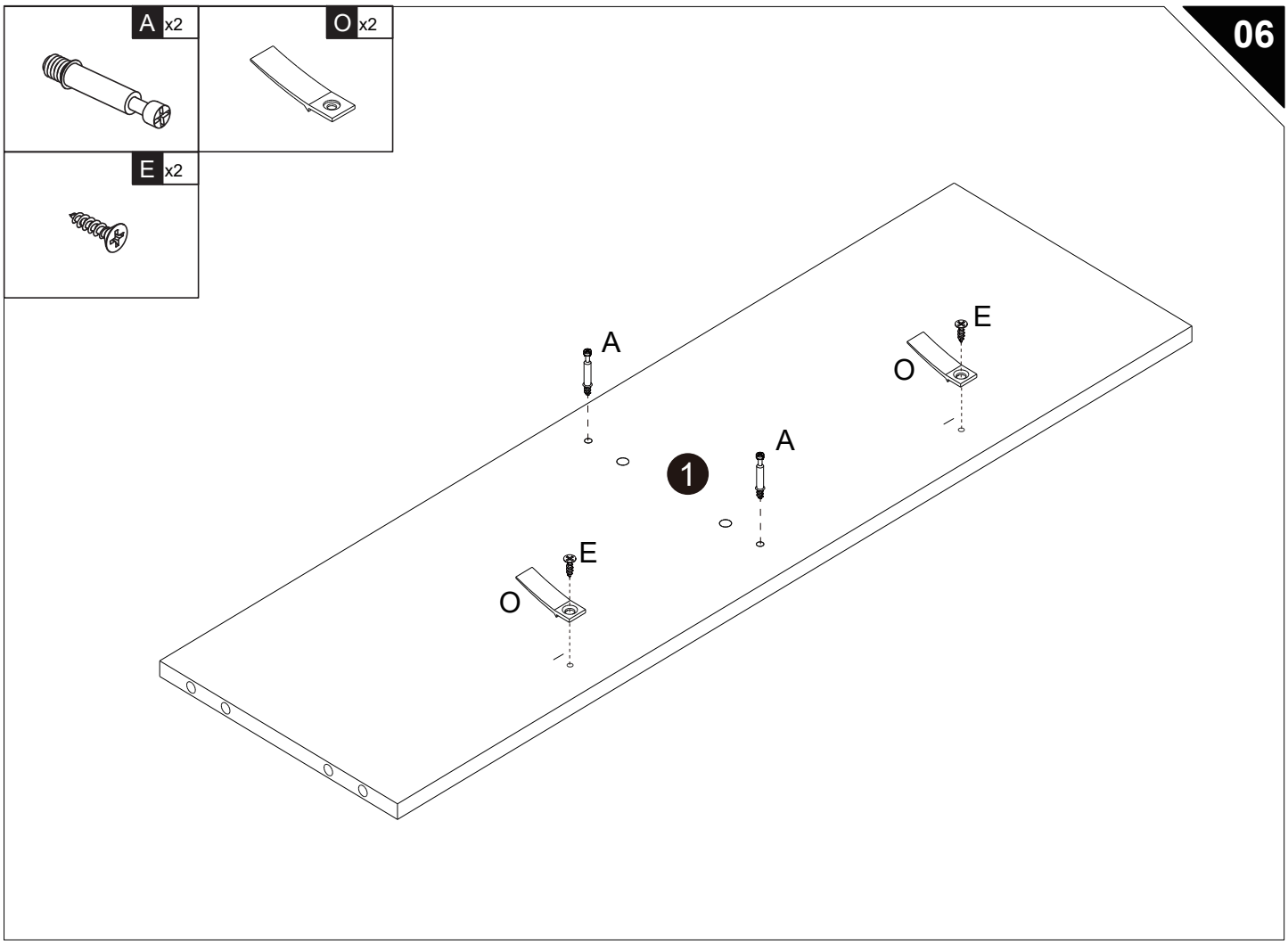
06
A x2
O x2
E x2
A
E
O
A
1
E
O

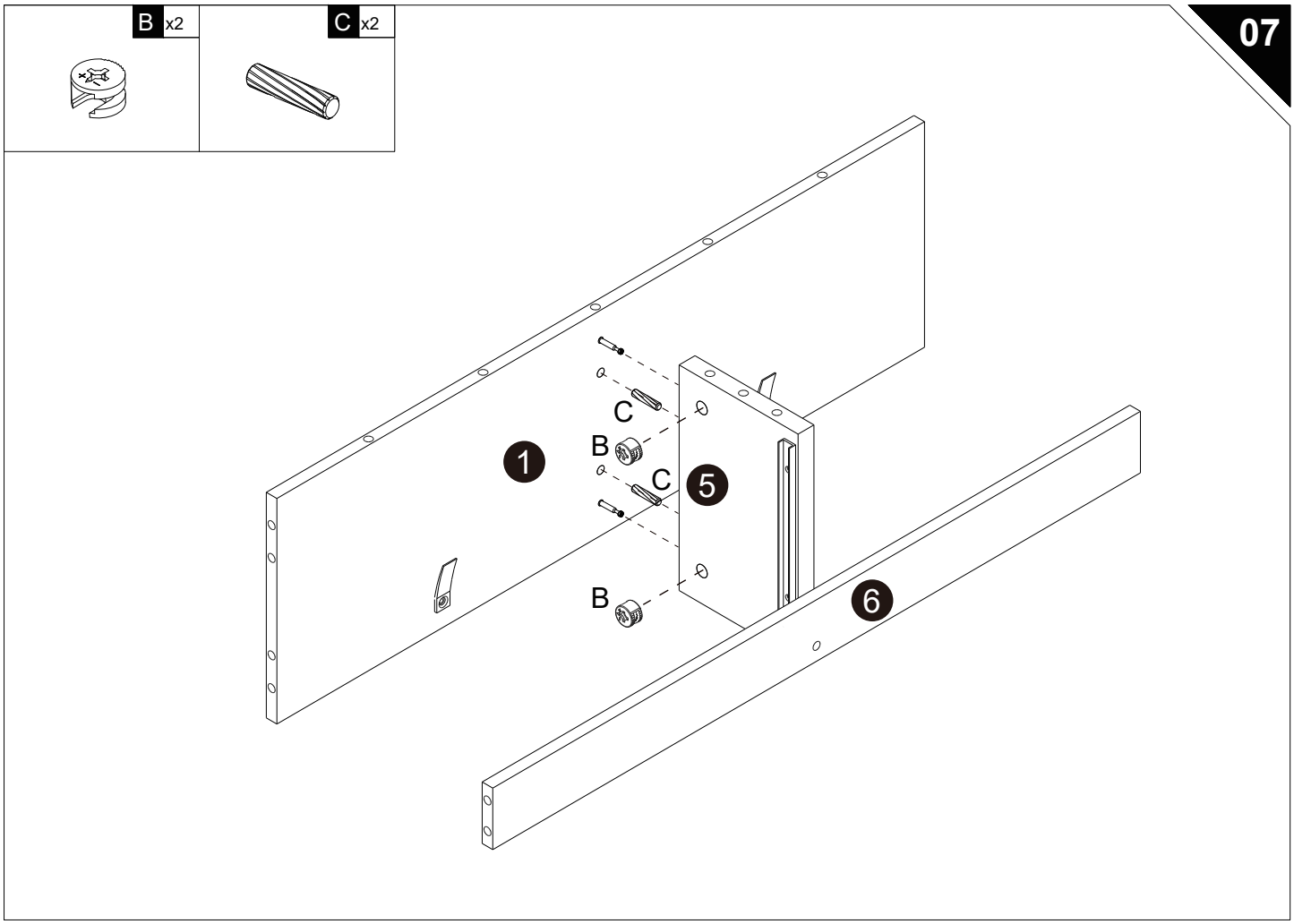
07
B x2
C x2
C
B
1
C
5
B
6

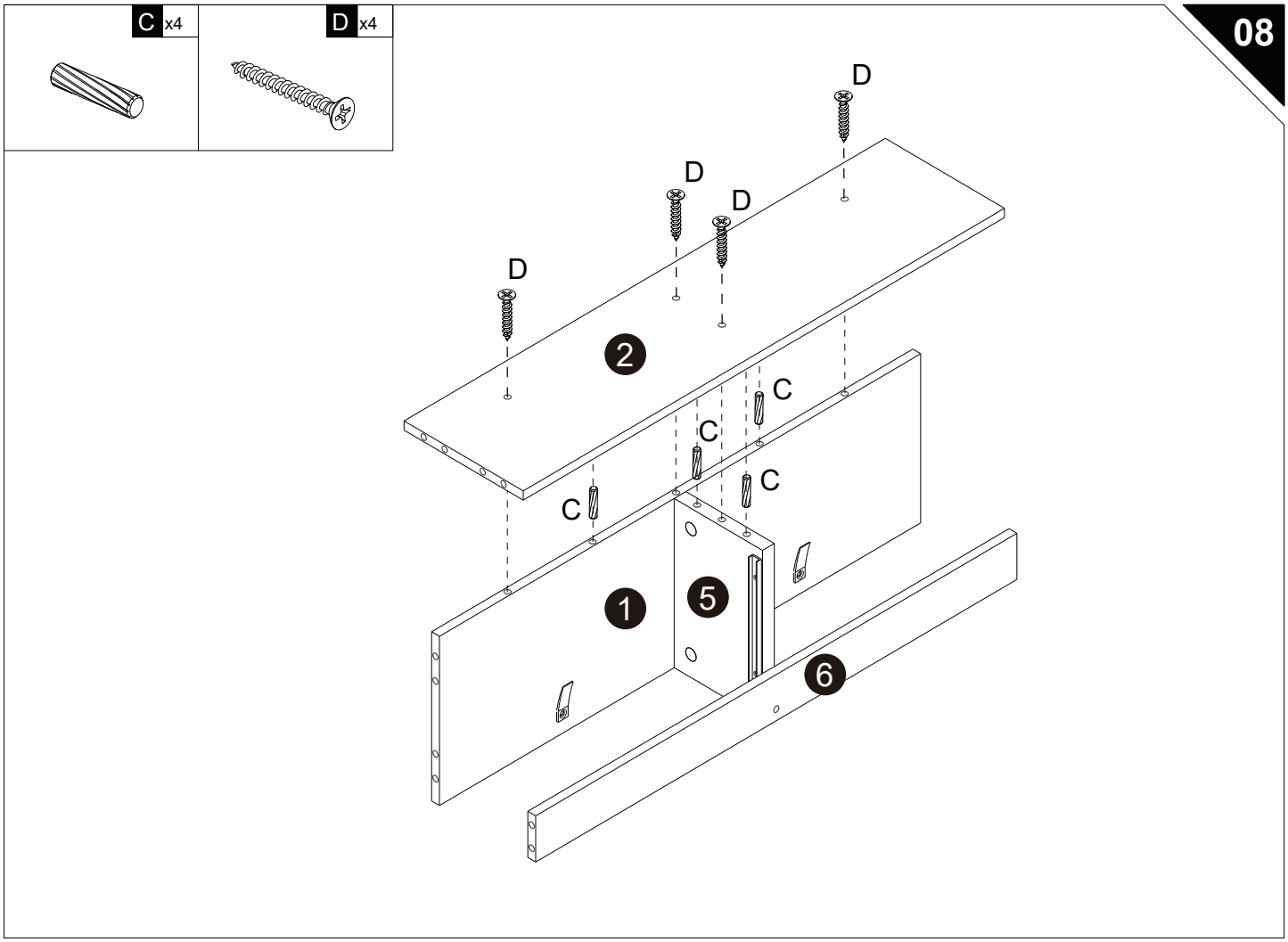
08
C x4
D x4
D
D
D
D
2
C
C
C
C
1
5
6

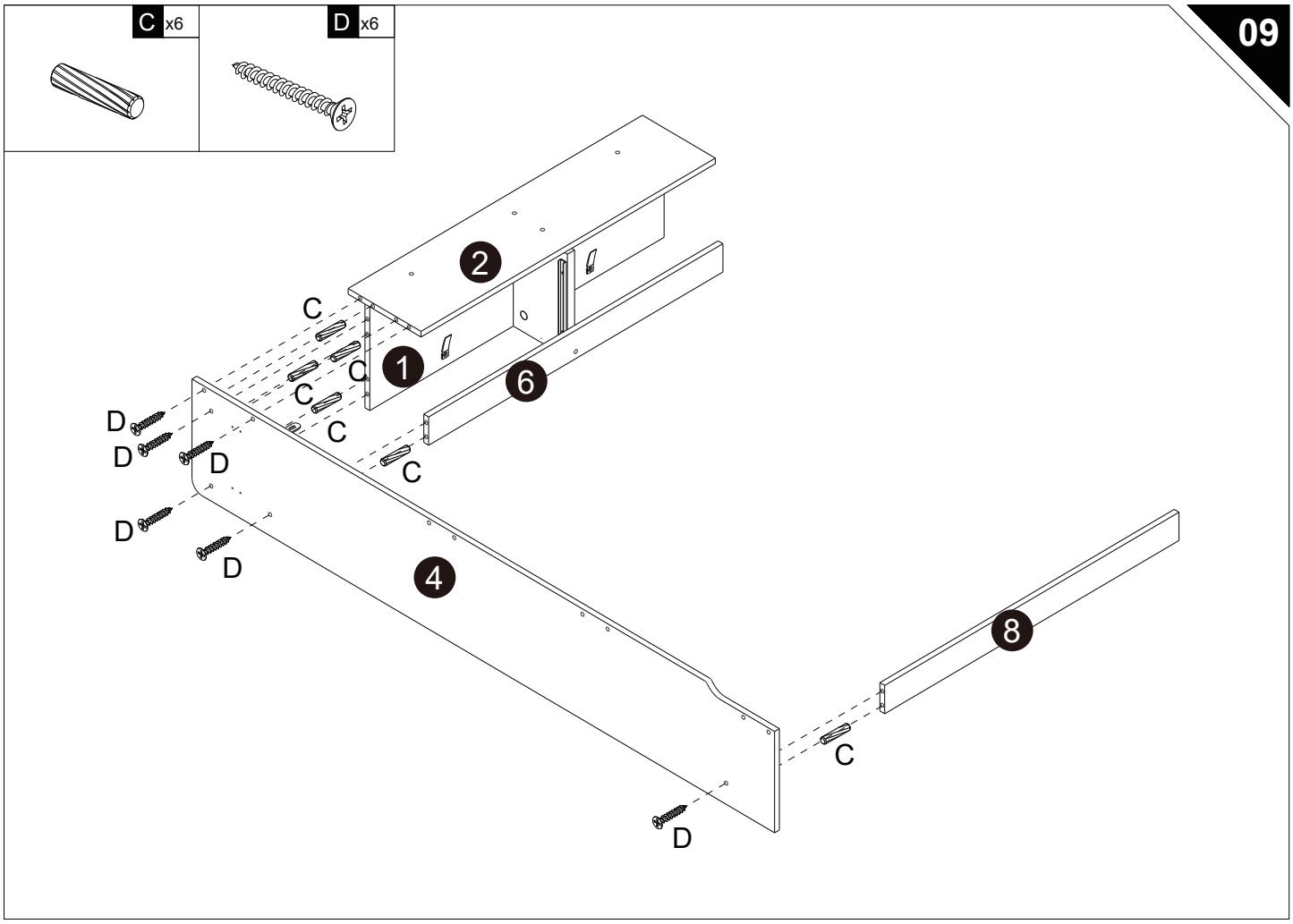
09
C x6
D x6
2
C
C
1
6
C
C
C
D
D
D
D
D
4
8
C
D

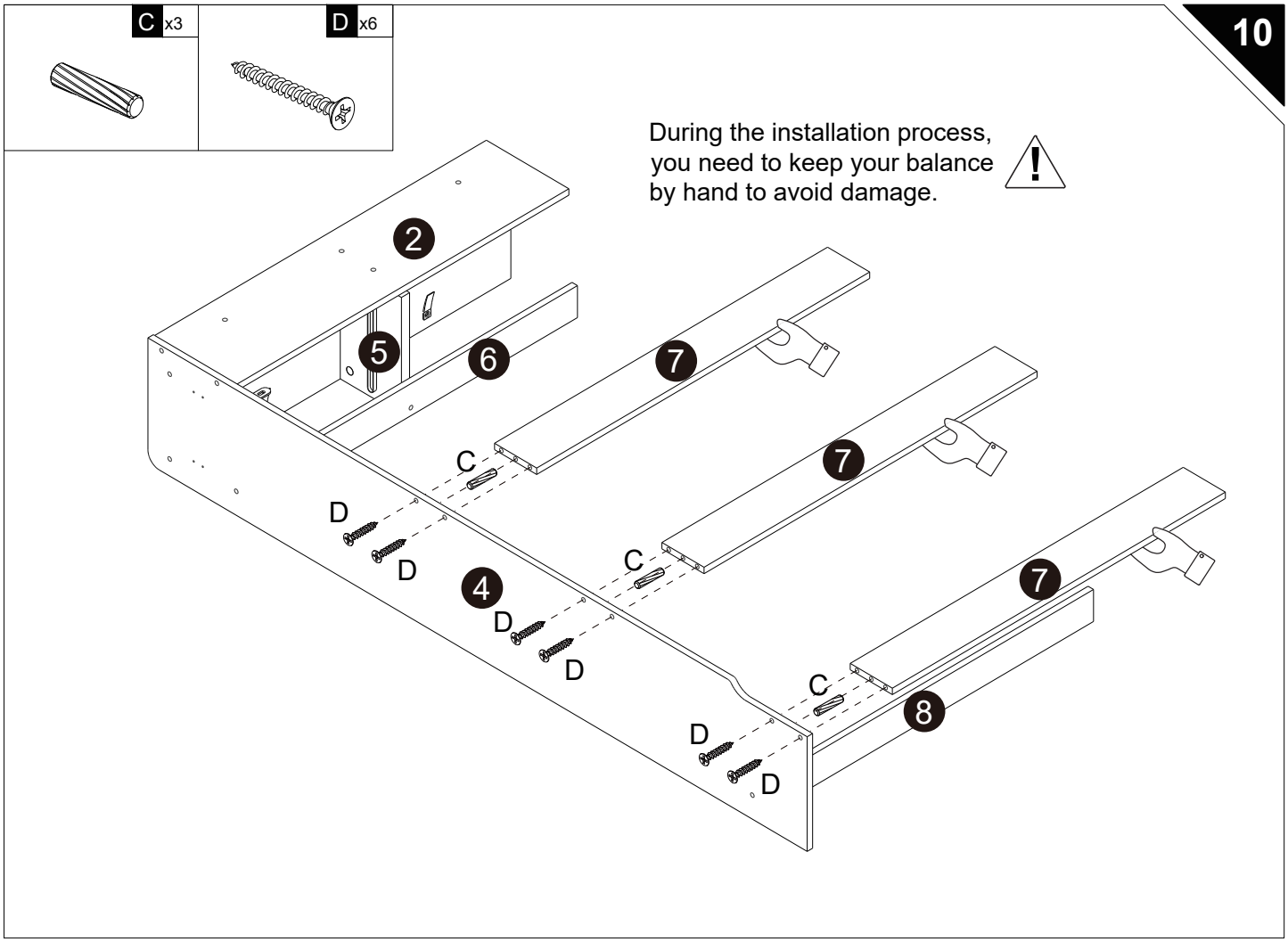
10
C x3
D x6
During the installation process, you need to keep your balance by hand to avoid damage.
2
5
6
7
7
7
4
8
C
D
D
C
D
D
C
D
D

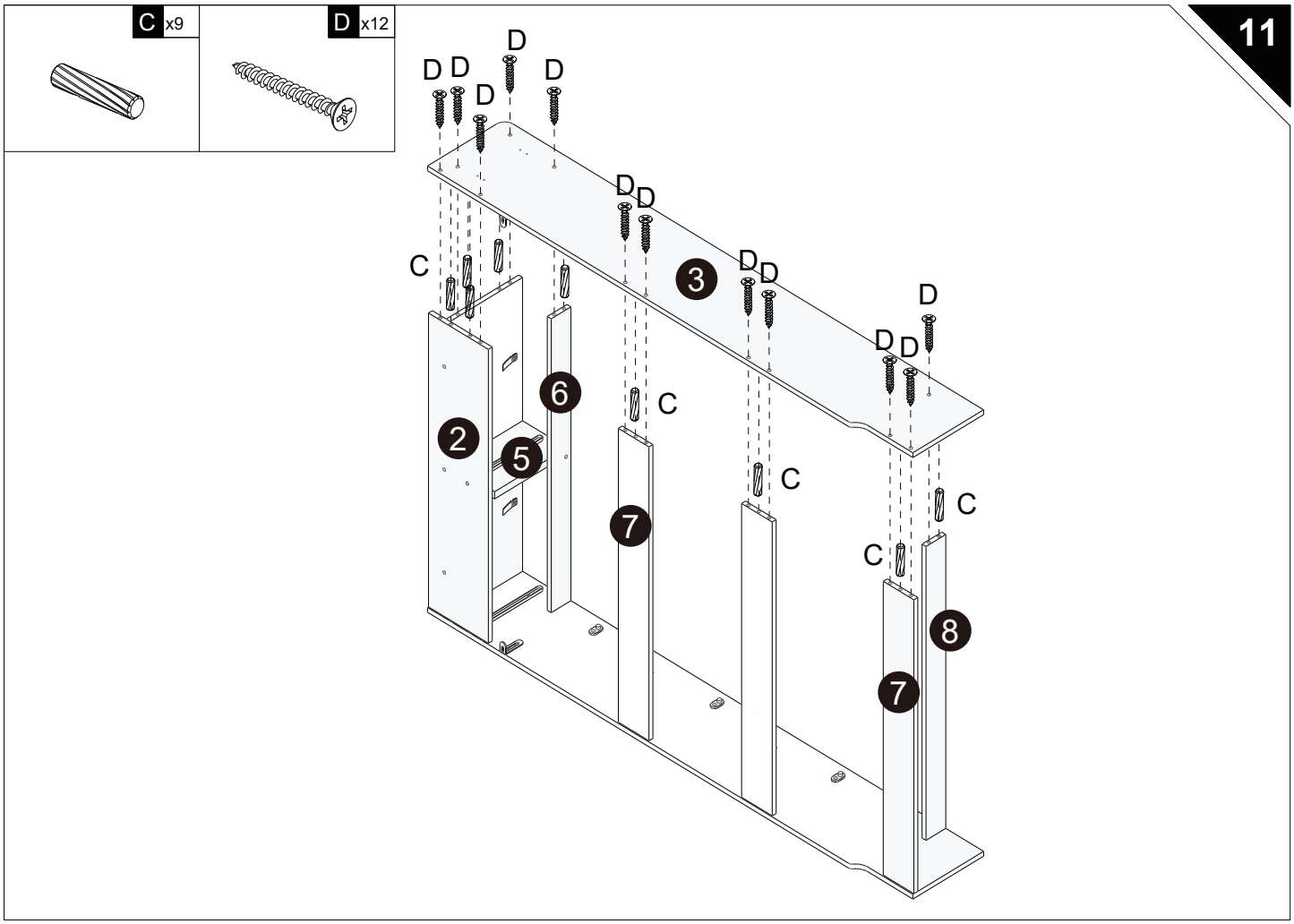
11
C x9
D x12
D
D D
D
D
D D
D D
D D
D
D D
C
C
C
C
C
2
3
5
6
7
7
8

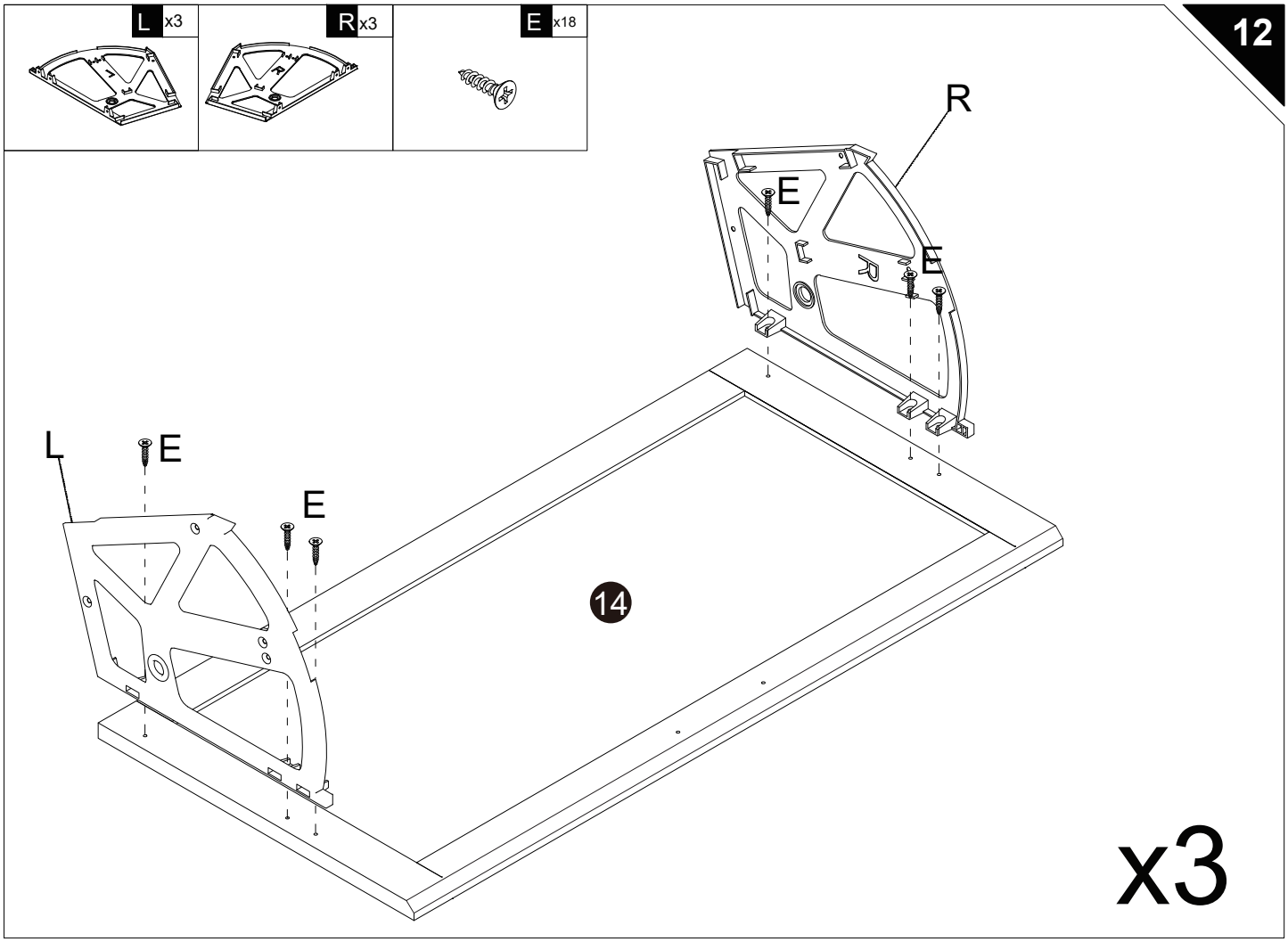
L x3
R x3
E x18
12
R
E
E
L
E
E
14
x3

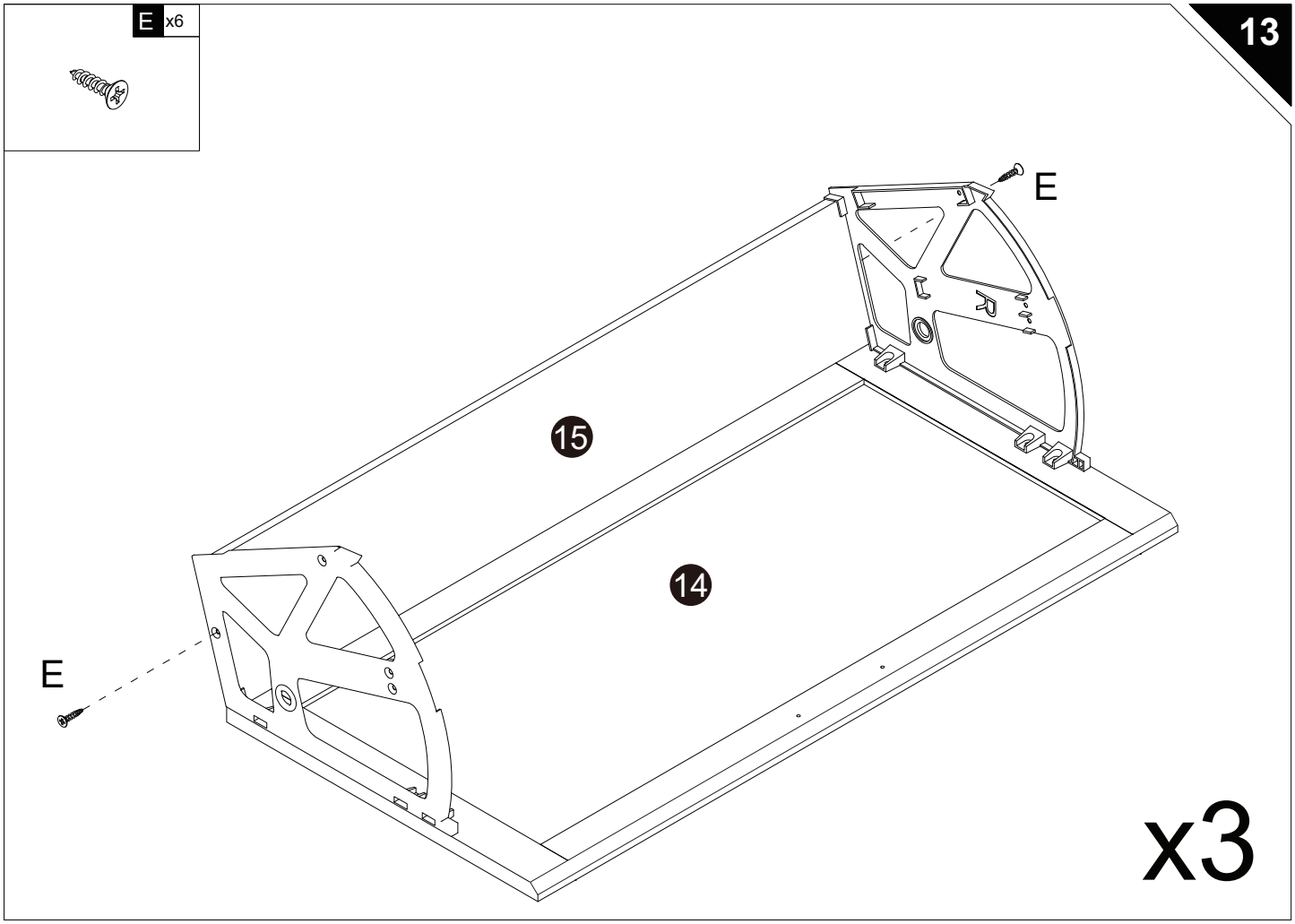
E x6
13
E
15
14
E
x3

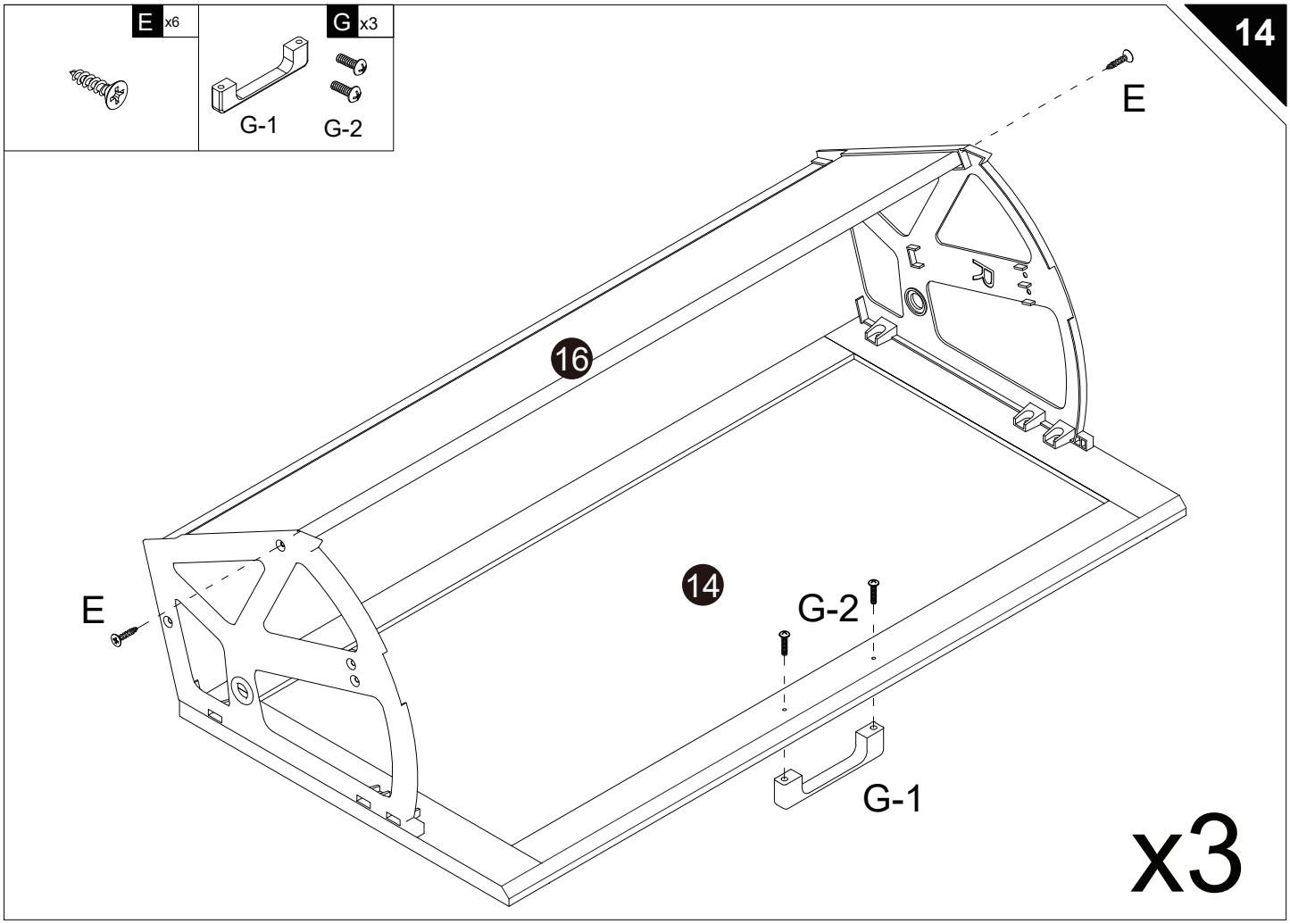
E x6
G x3
G-1
G-2
14
E
16
E
14
G-2
G-1
x3

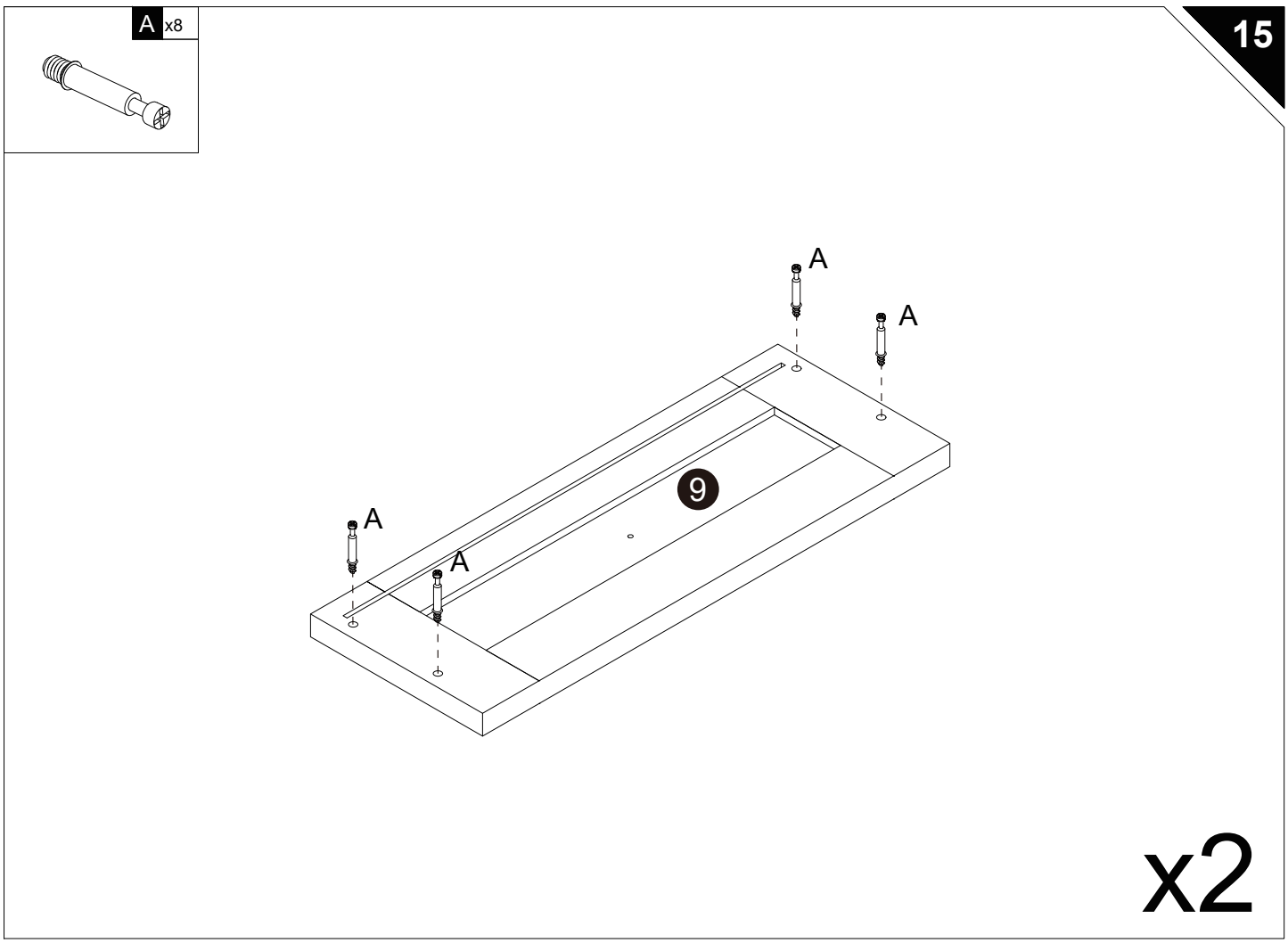
A x8
15
A
A
A
A
9
x2

D x8

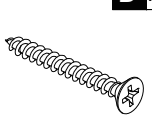

16

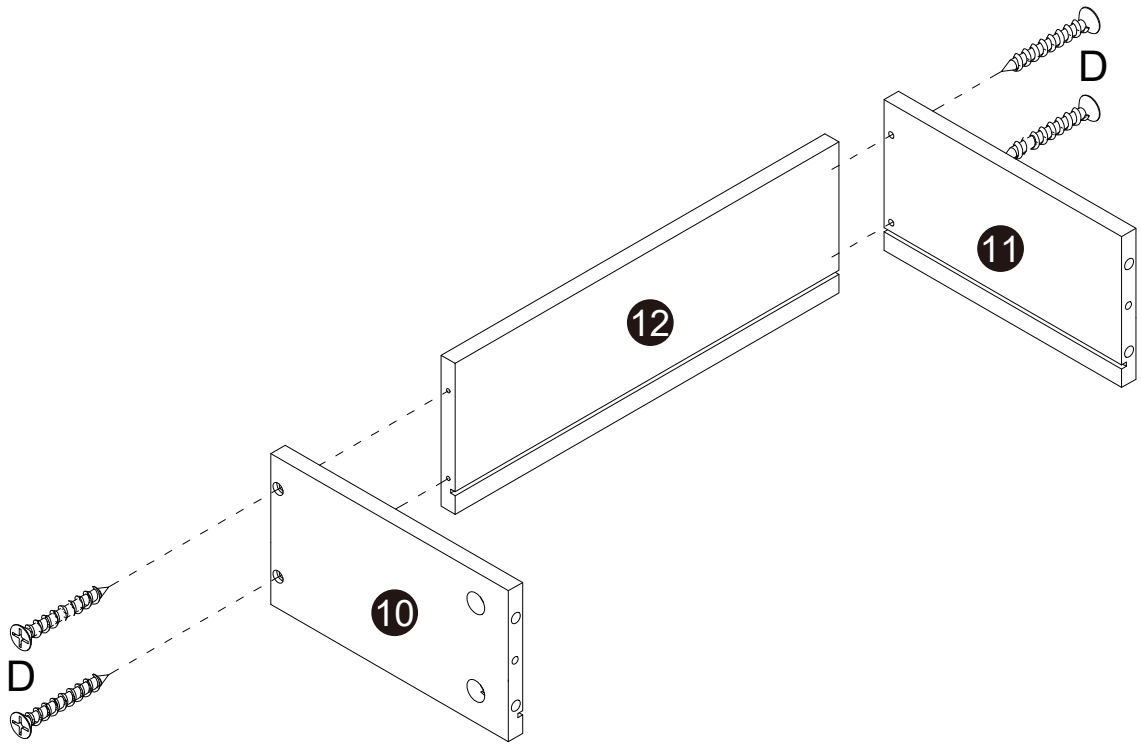

x2

17

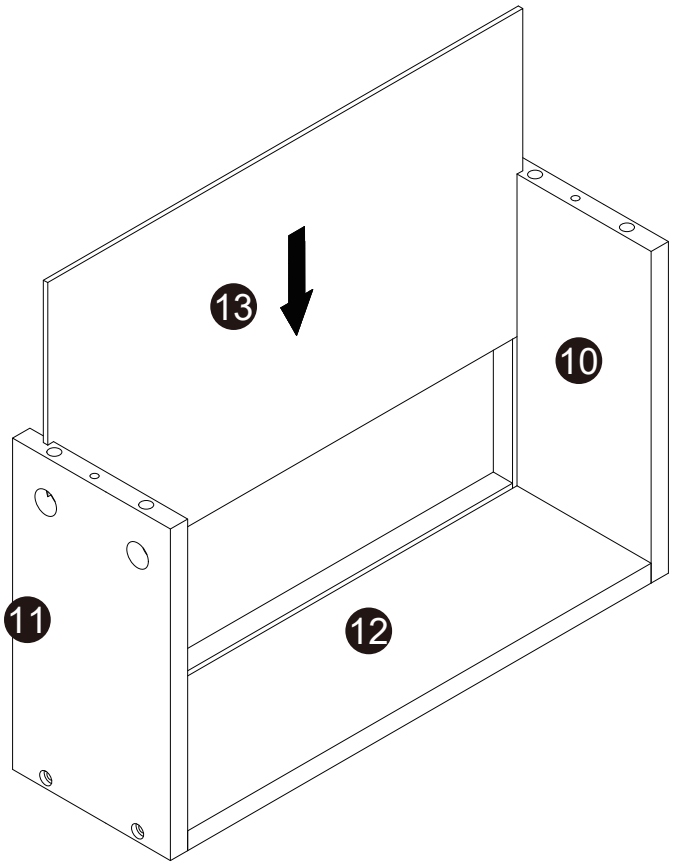

x2

B x8



C x4

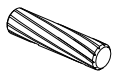

18

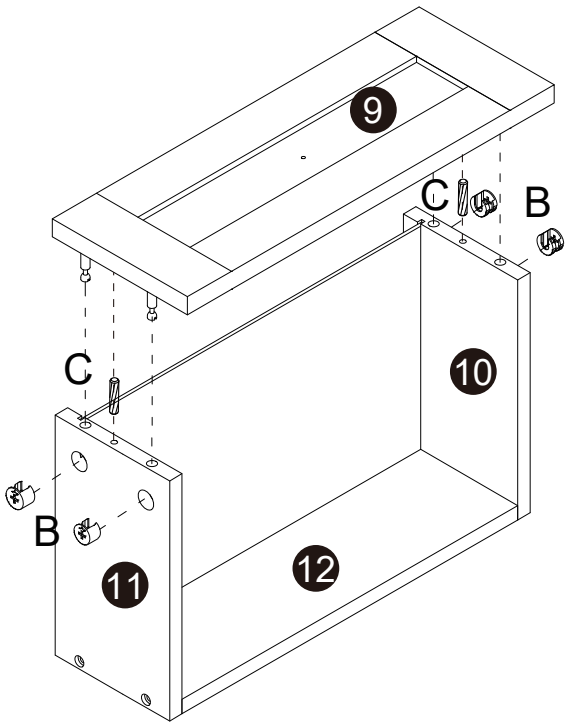

x2

F x2

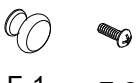

F-1 F-2

19

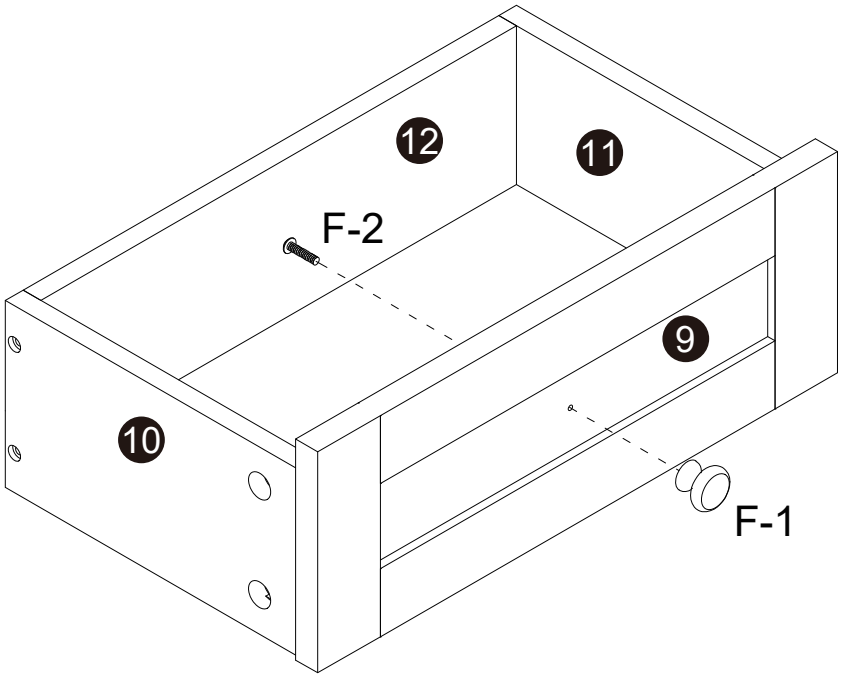

x2

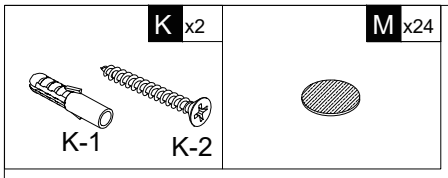

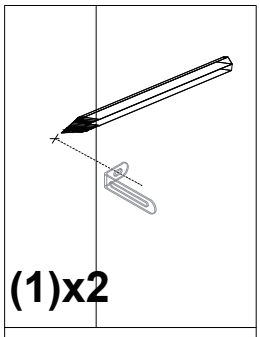

then, use a ruler to measure the approximate height of the product on the wall, and then mark it witha pen.

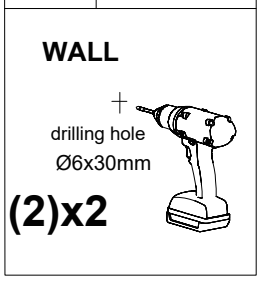

Then use a tape drill to make holes in the wall that are suitable for the product screws.

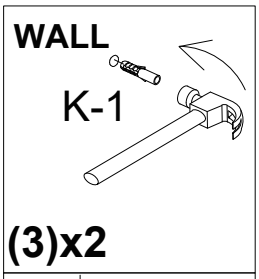

Then,put the expansion bolt into the hole

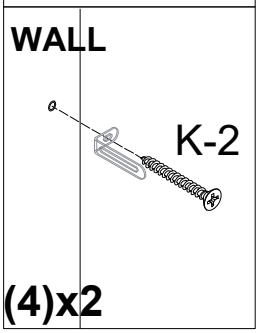

Finally,pass the matching screws throughthe "anti-rewind" and tighten themto fix them on the wall.

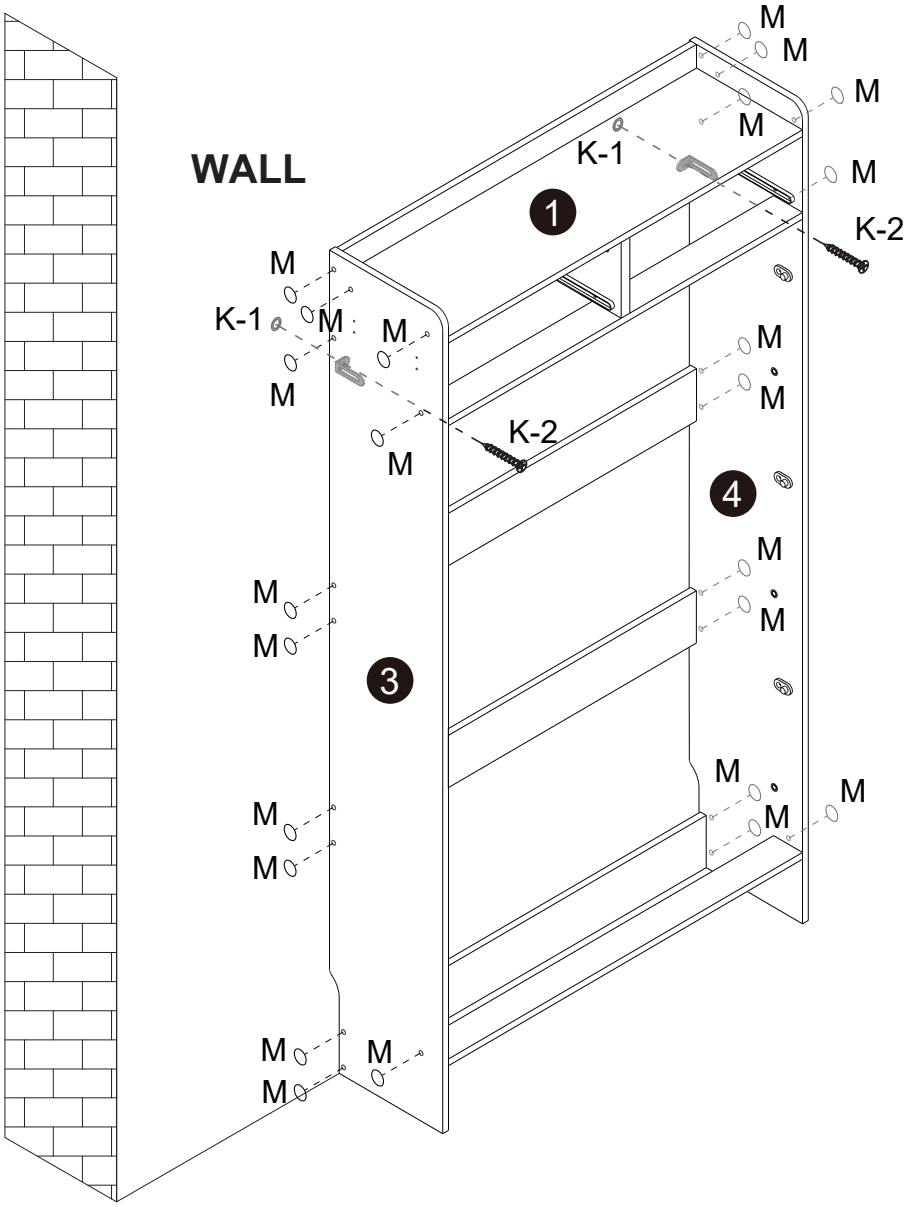

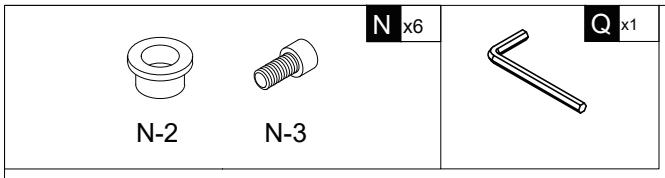



If the installation cannot be placed in the correct position, please try operating at other inclined angles.

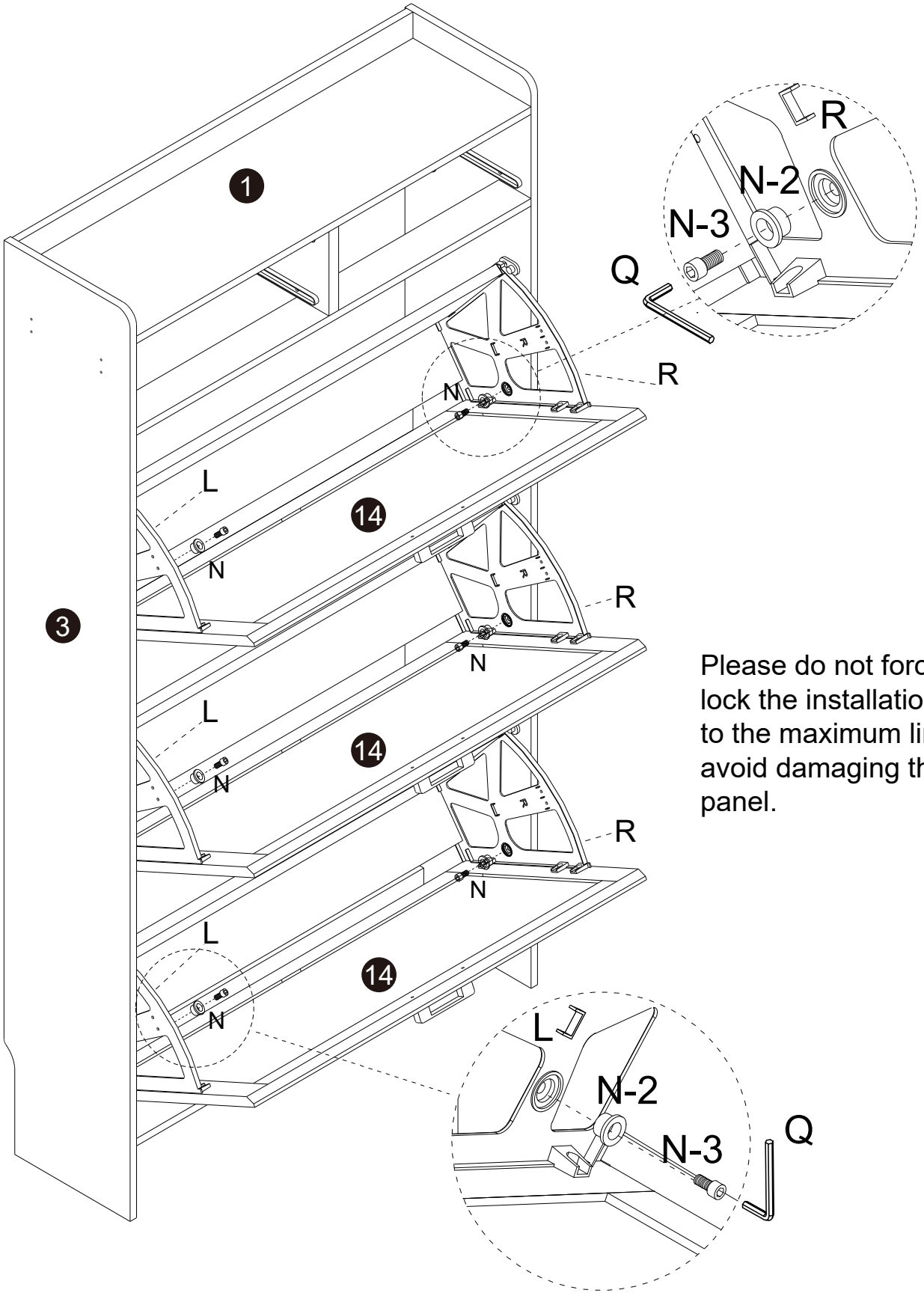

Please do not forcefully lock the installation screws to the maximum limit to avoid damaging the side panel.

E x6

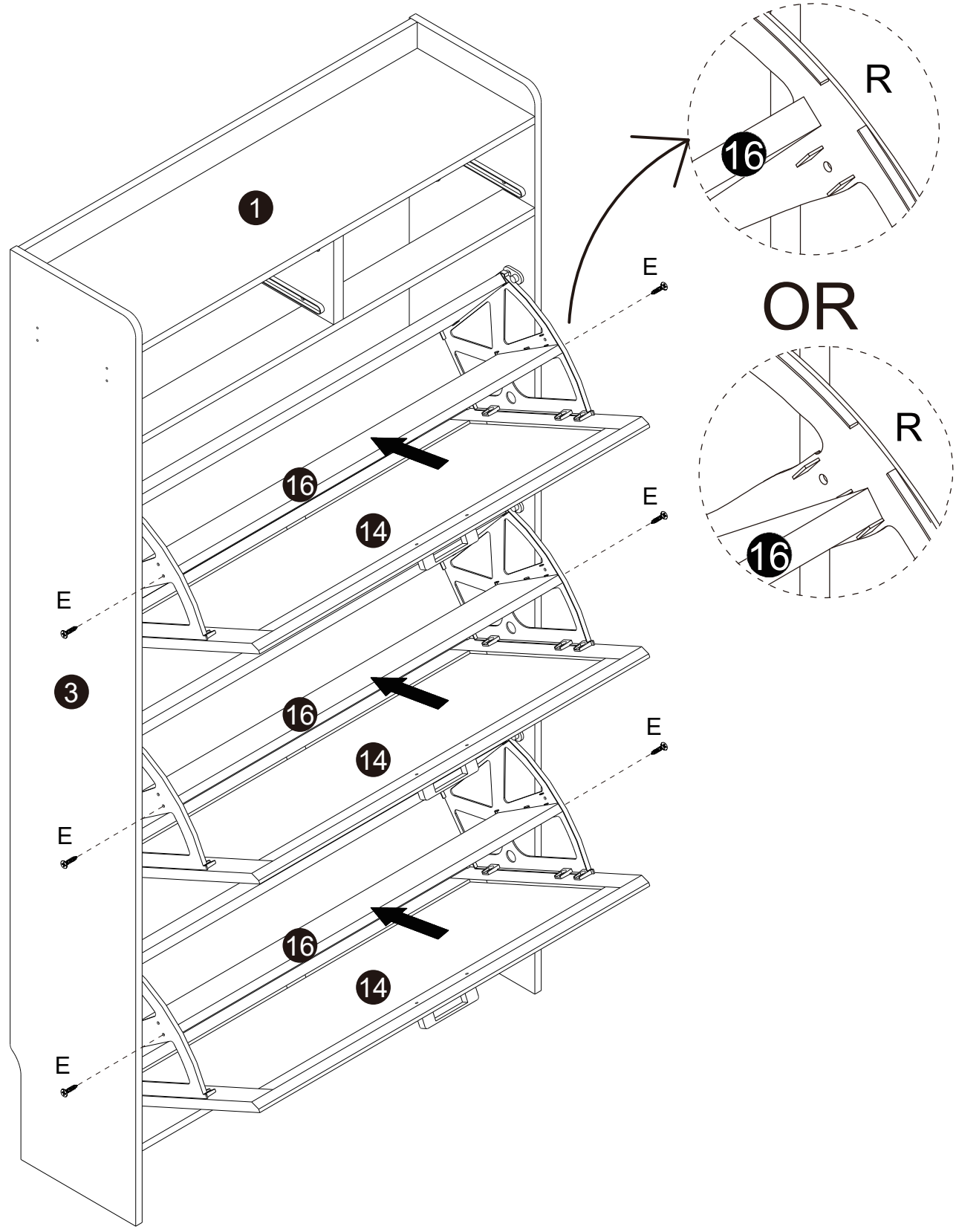

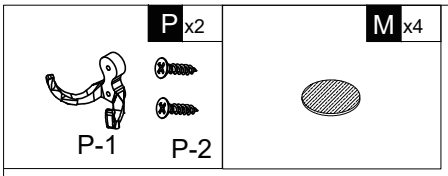

The P number can be mounted to the No. 3 or No. 4 side panels

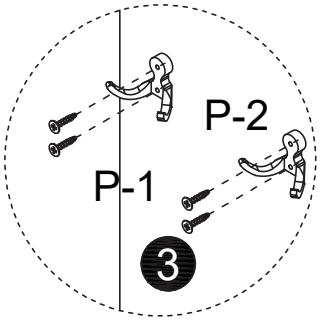

OR

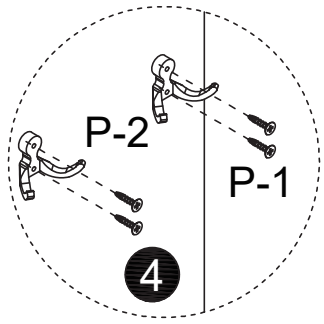

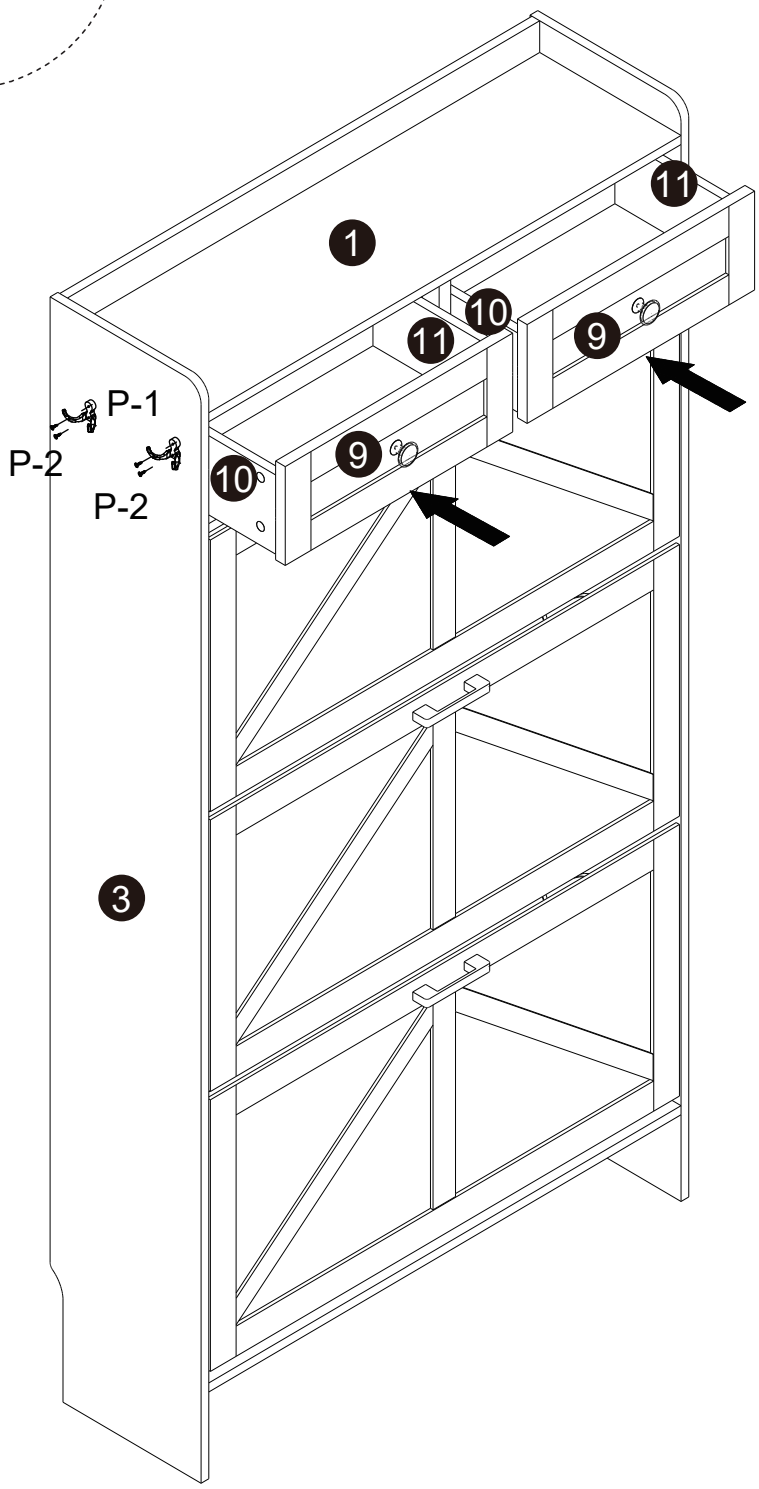

Done

