33 Inch Single Bowl Undermount
Fireclay Farmhouse Kitchen Sink

Nantucket
SINKS

www.NantucketSinksUSA.com
info@nantucketsinksusa.com

model:
WFVC33MBCA

Top View

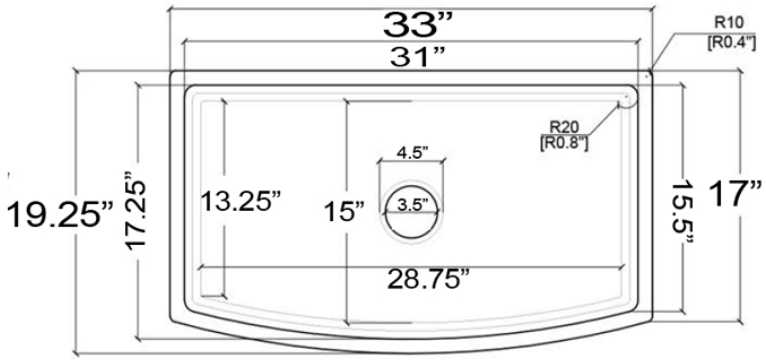

Front View

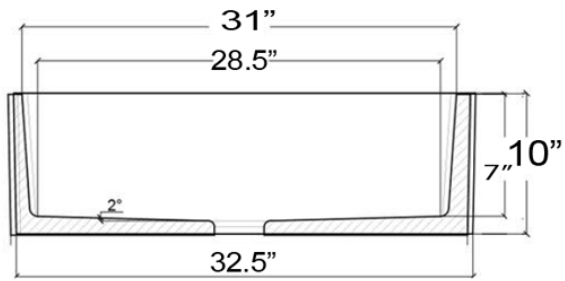

OVERALL DIMENSIONS	INTERIOR BOWL	BOWL DEPTH	DRAIN DIMENSIONS	BOTTOM GRID
33" x 19..25” x 10"	31” x 17.25"top 28.75” x 13.25” bottom / side	9” at center	3.5" Standard Opening	N/A

FEATURES:

- Nominal dimensions may vary by .25” - template not included
- Fireclay - Scratch/Heat Resistant
- Material is sound absorbing and stain-resistant
- Undermount - Apron Base is Required
- Limited Manufacture’s Warranty
- Professional Installation Recommended
- MADE IN ITALY
- Drain is not included
- Compatible with garbage disposers - do not overtighten (do by hand) or sink may crack

Project Name: _____

Architect / Contractor: _____

Job Notes: _____

_____

_____