CollaredEagle

VD019-A

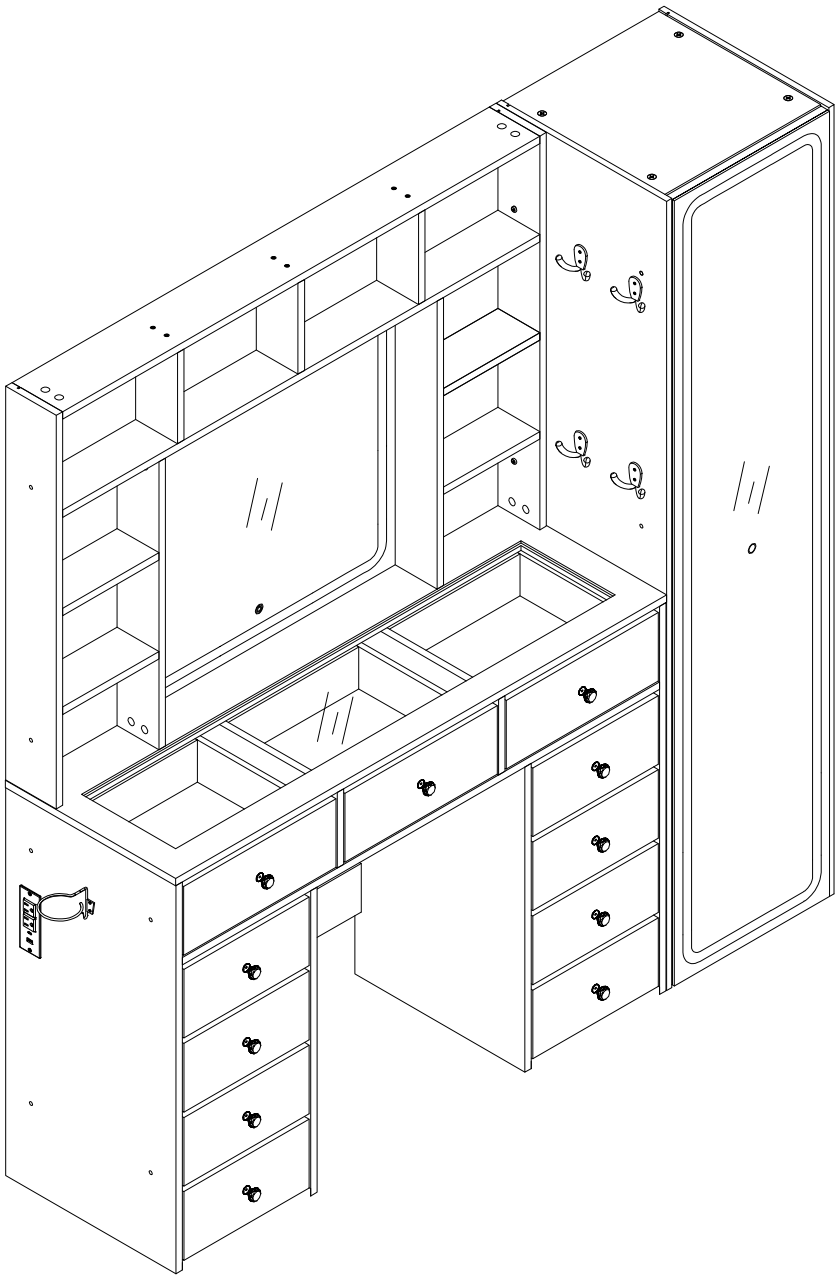

Suggestion: To make the installation process easier and faster, we recommend that two people work together to install the Dressing table.

Helpful Hints

1.We recommend two people to assemble the product easier and faster.

2. Please DO NOT tighten the screws deeply during assembling avoiding that metal frame can be bent and plank will crack.

3.We recommend that all screws should not be tightened over during assembling to make it easy to adjust.When it is adjusted to proper stationall screws should be tightened.

4.Caution: If using a power drill or power screwdriver for screwing please be aware of to slow down and stop when screw is tight. Failure to do so may result in stripping the screw.

Customer Service

As this item contains many parts, please read the installation instructio carefully before installation and complete the installation with the cooperation of your partner. Please use tools properly and carefully. If you have any questions about the product and installation, please contact us freely.  **CollaredEagle@163.com**

EXPLODED

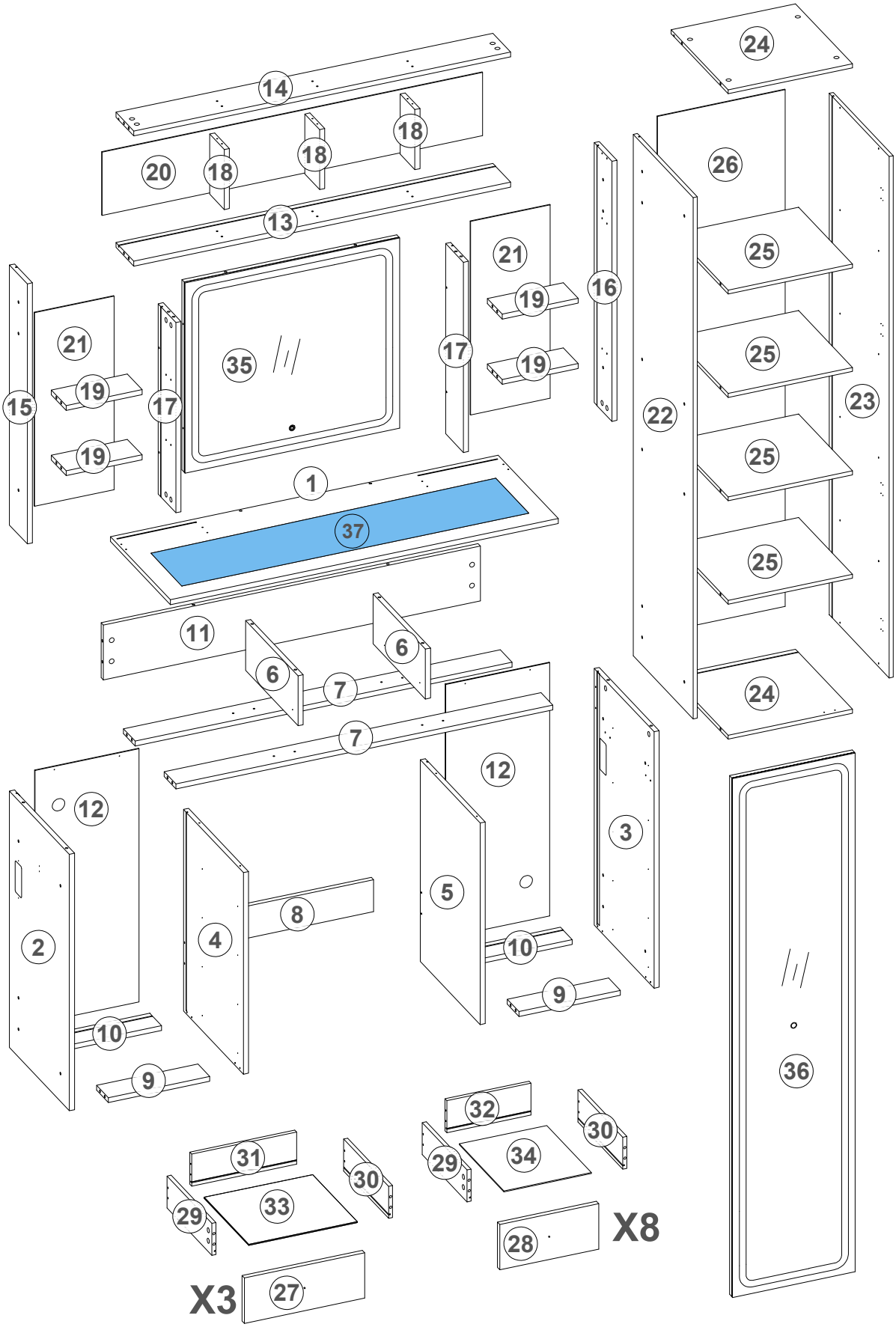
14
18
18
18
20
13
21
19
19
16
17
35
21
19
19
15
17
1
37
11
6
6
7
7
12
12
2
4
8
5
10
9
10
9
3
24
26
25
25
25
25
22
23
24
36
32
30
29
34
31
30
29
33
28
X8
X3
27

Accessories list

Package A

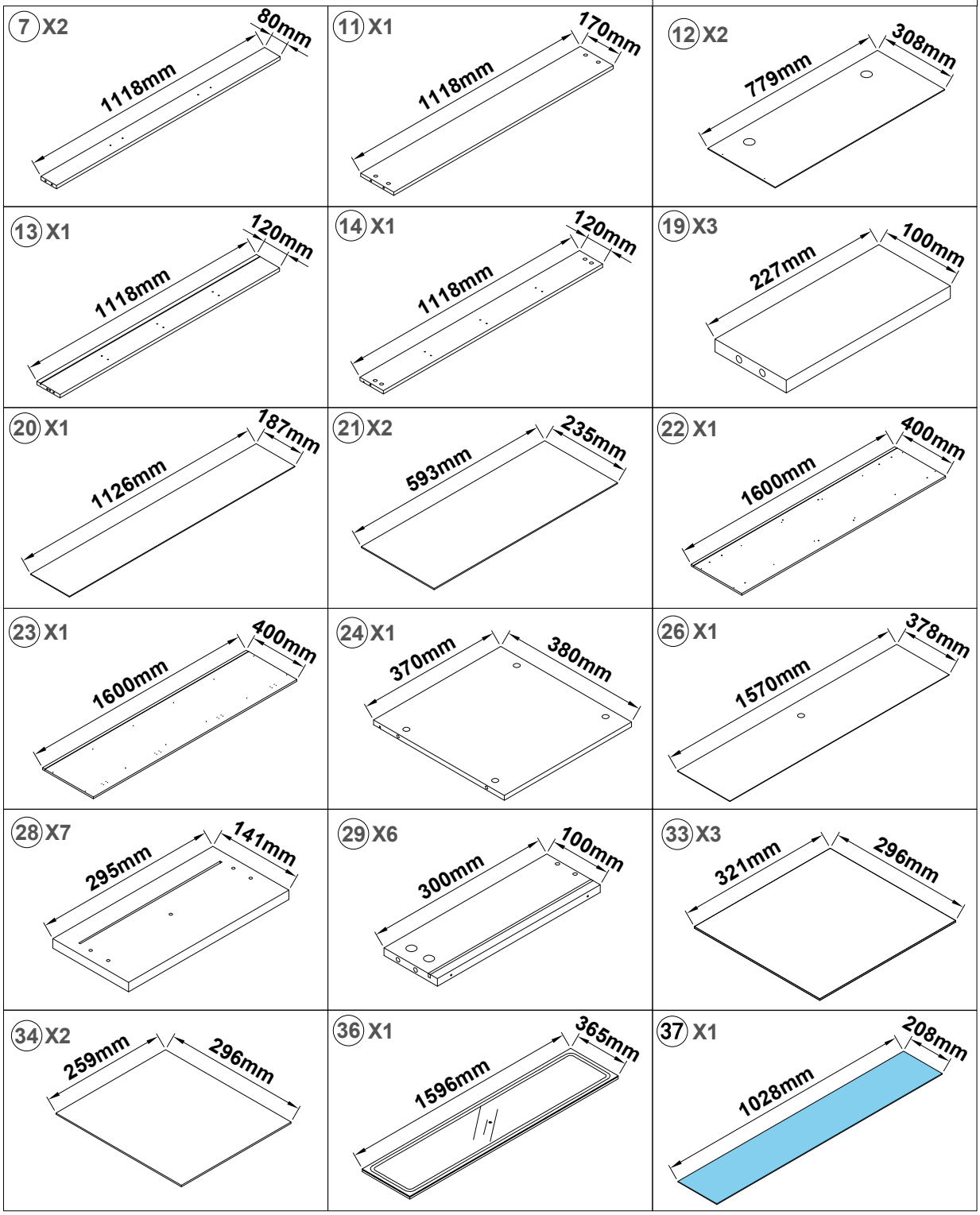

★ **In many cases, we include additional hardware. So after following the assembly instructions, don't worry if there are still extra pieces left over-they're included as a "just in case" for your convenience**

Accessories list

Package B

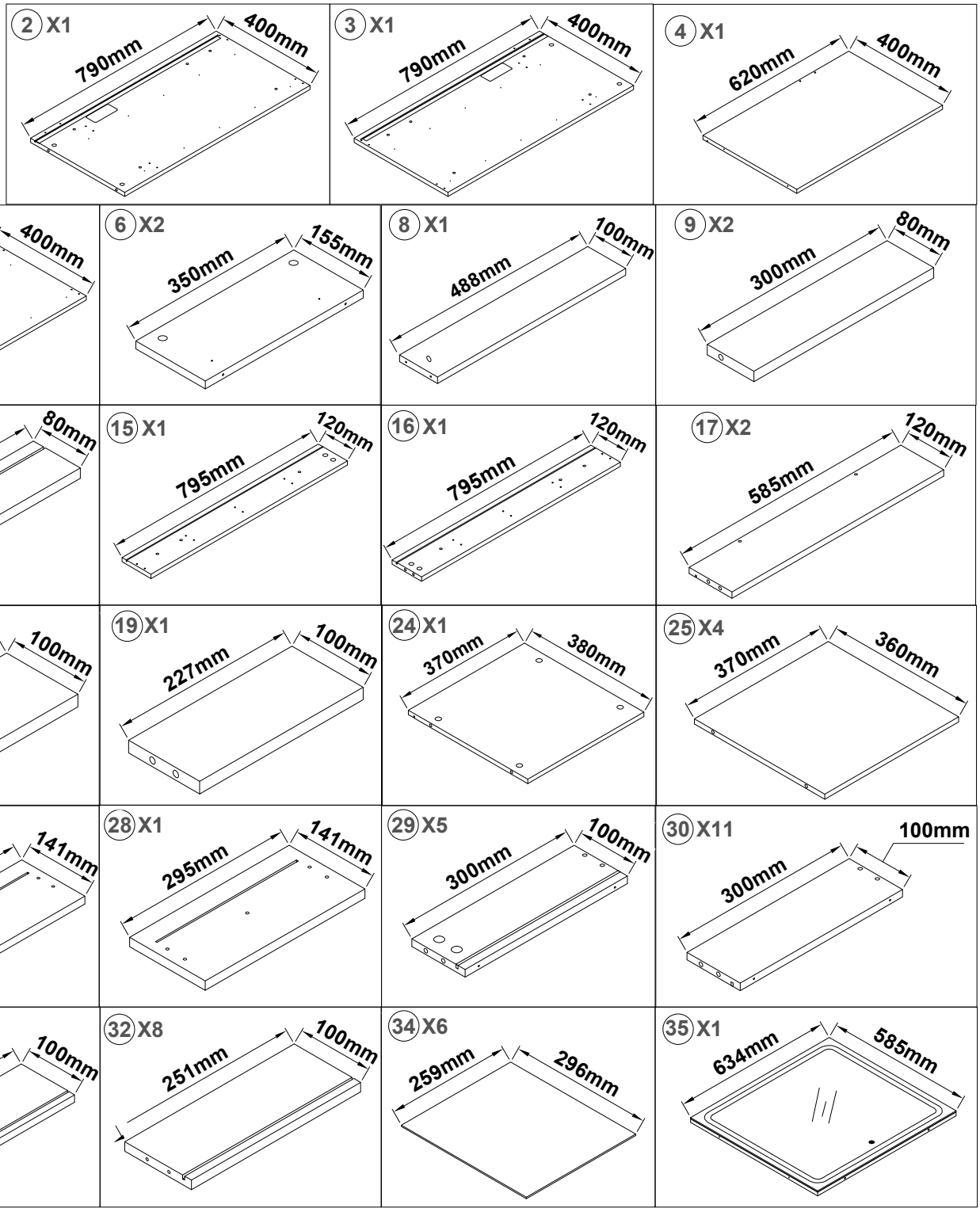

★ **In many cases, we include additional hardware. So after following the assembly instructions, don't worry if there are still extra pieces left over-they're included as a "just in case" for your convenience**

Accessories list

 X142+3	 X142+3	 X4+1	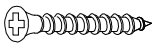 X72+2	 X54+2
A M7X40mm	B Ø15x9.5mm	C Ø6x30mm	D M4x40mm	E M3.5x12mm
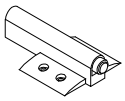 X1	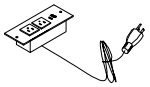 X1	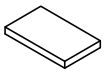 X12	 X1	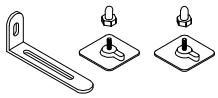 X2
F	G	H	I LED	J
 X30	 X2	 X12+1	 X11	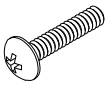 X11
K	L M4X12mm	M Ø17mm	N	O M4X14mm
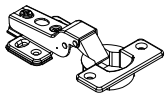 X4	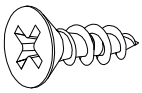 X85+2	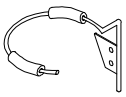 X1	 X6	 X6
P Ø35	Q M3x14mm	R	S M6x20mm	T M6x12mm
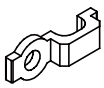 X7	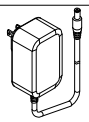 X2	 X4	 X8+1	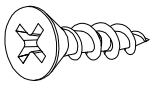 X28
U	V	W	X	Y M4X12mm
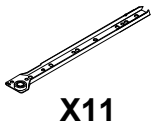 X11	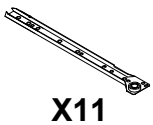 X11	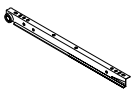 X11	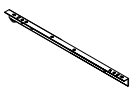 X11	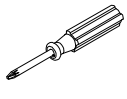 X1
CL 300mm	CR 300mm	DR 300mm	DL 300mm	

★ In many cases, we include additional hardware. So after following the assembly instructions, don't worry if there are still extra pieces left over-they're included as a "just in case" for your convenience

step1

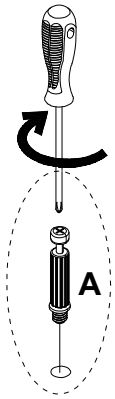

Tighten to the appropriate position

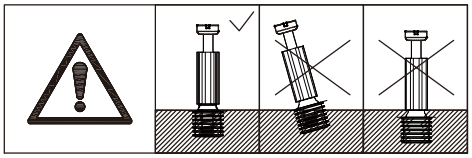

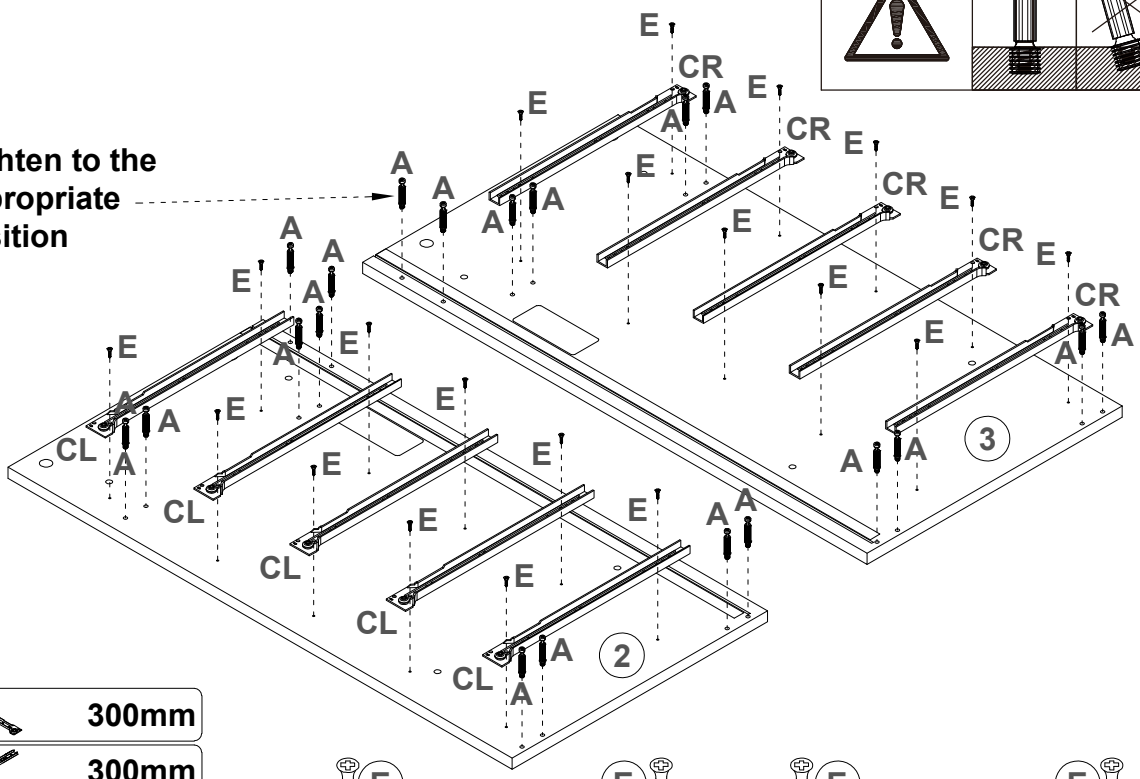

CR	X5	300mm
CL	X5	300mm
E	X20	M3.5x12mm
A	X20	M7X40mm

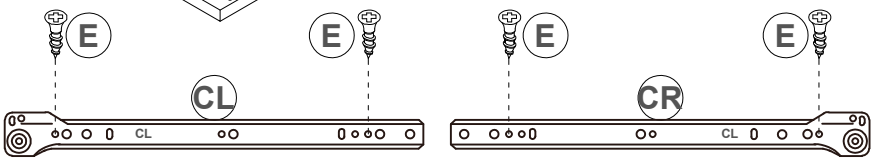

step2

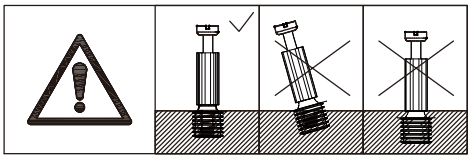

Tighten to the appropriate position

CR	X4	300mm
CL	X4	300mm
E	X16	M3.5x12mm
A	X8	M7X40mm

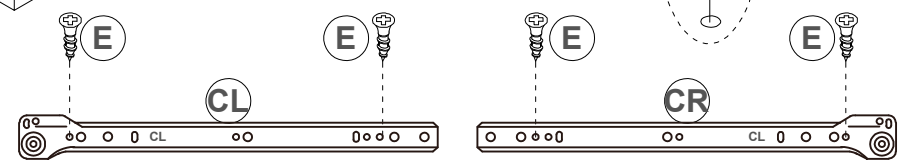

step3

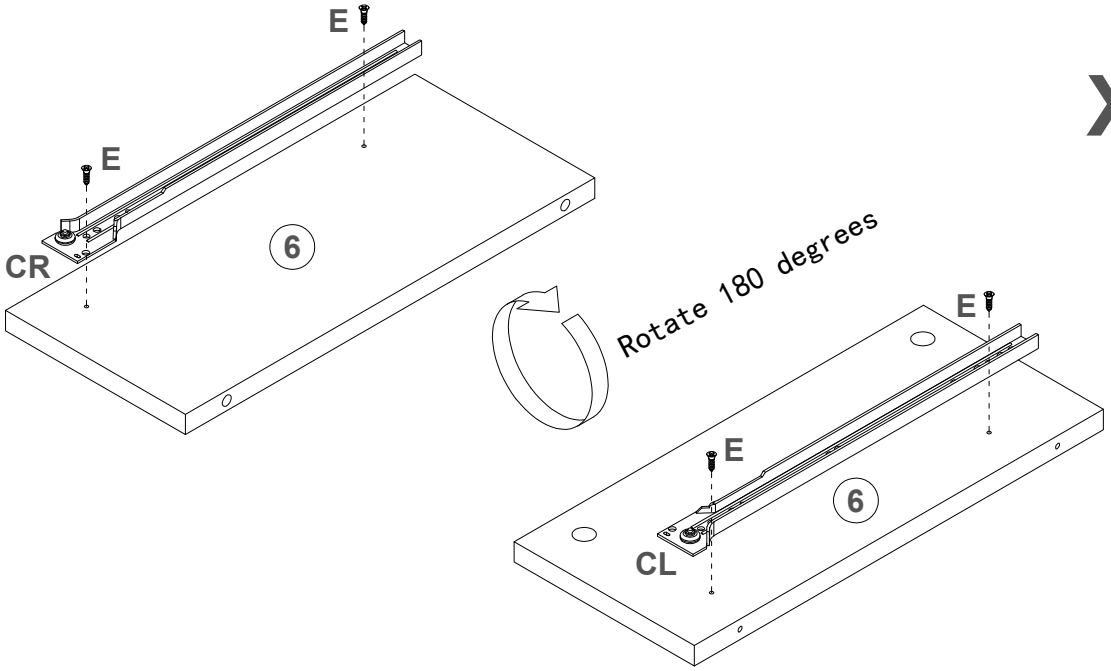

X2

CR	X2	300mm
CL	X2	300mm
E	X8	M3.5x12mm

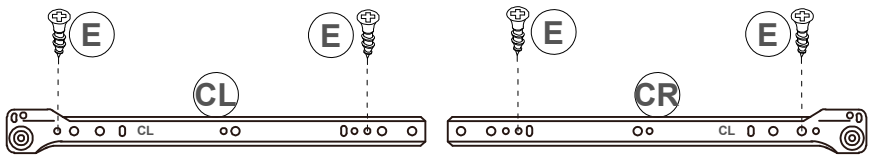

step4

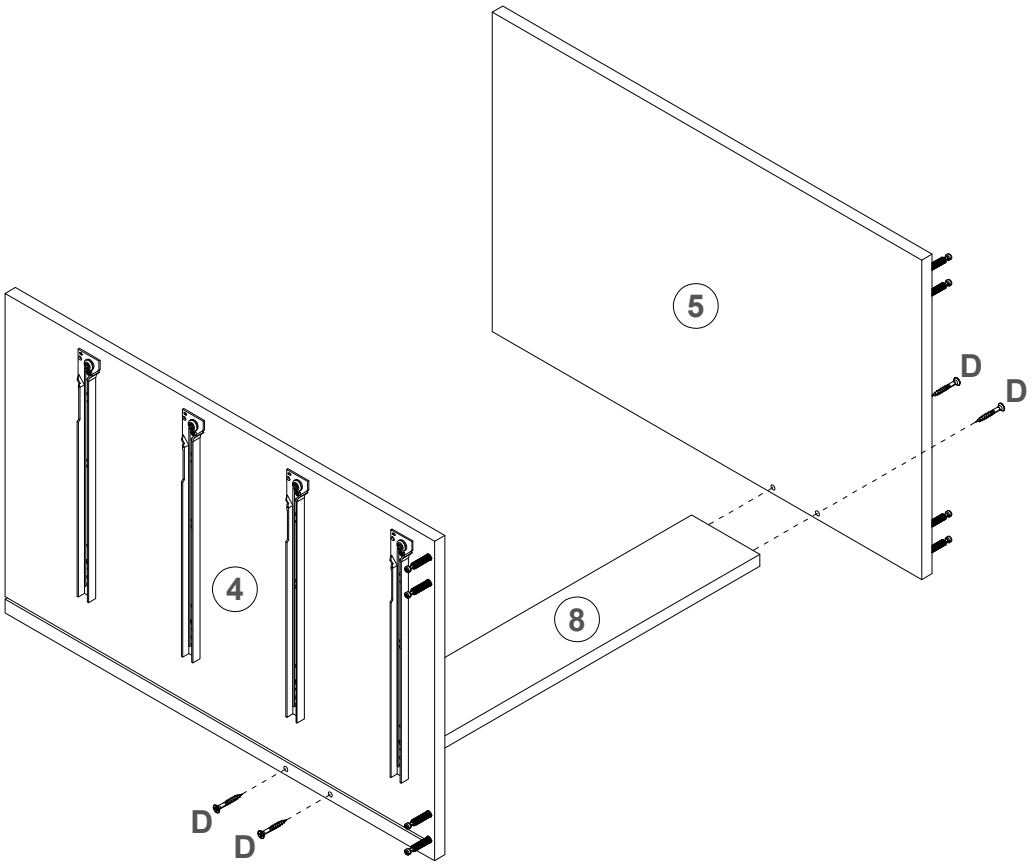

D	X4	M4x40mm

step5

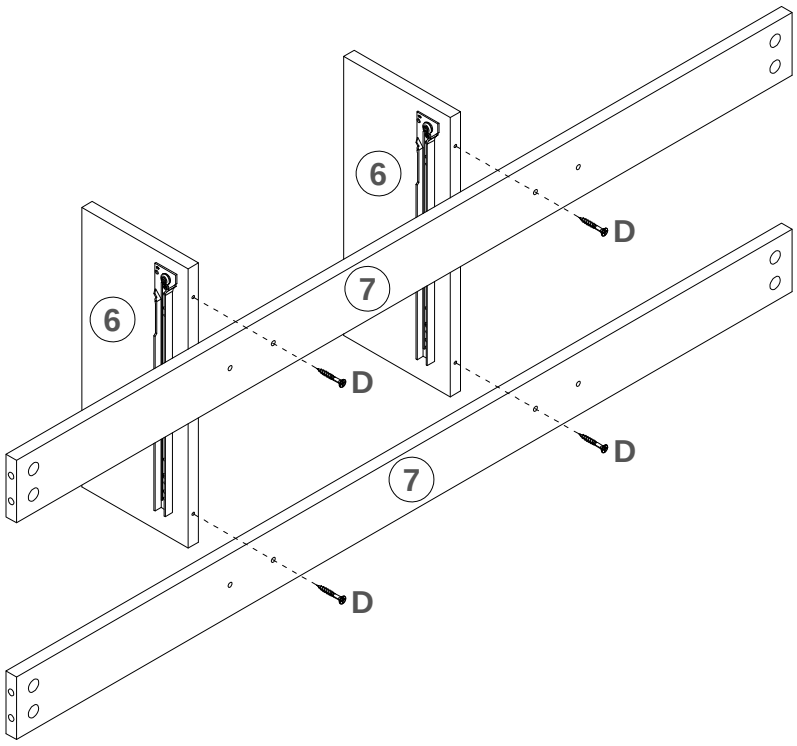

D X4 M4x40mm

step6

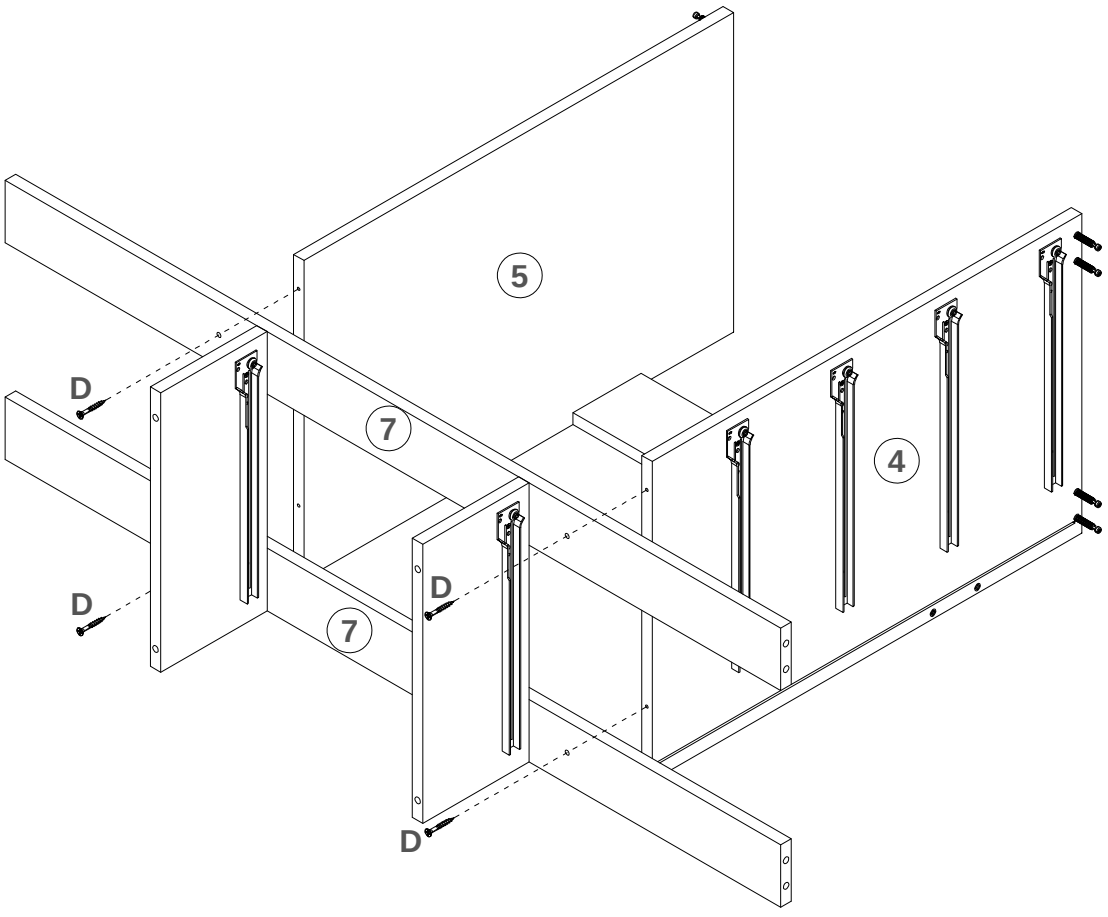

D X4 M4x40mm

step7

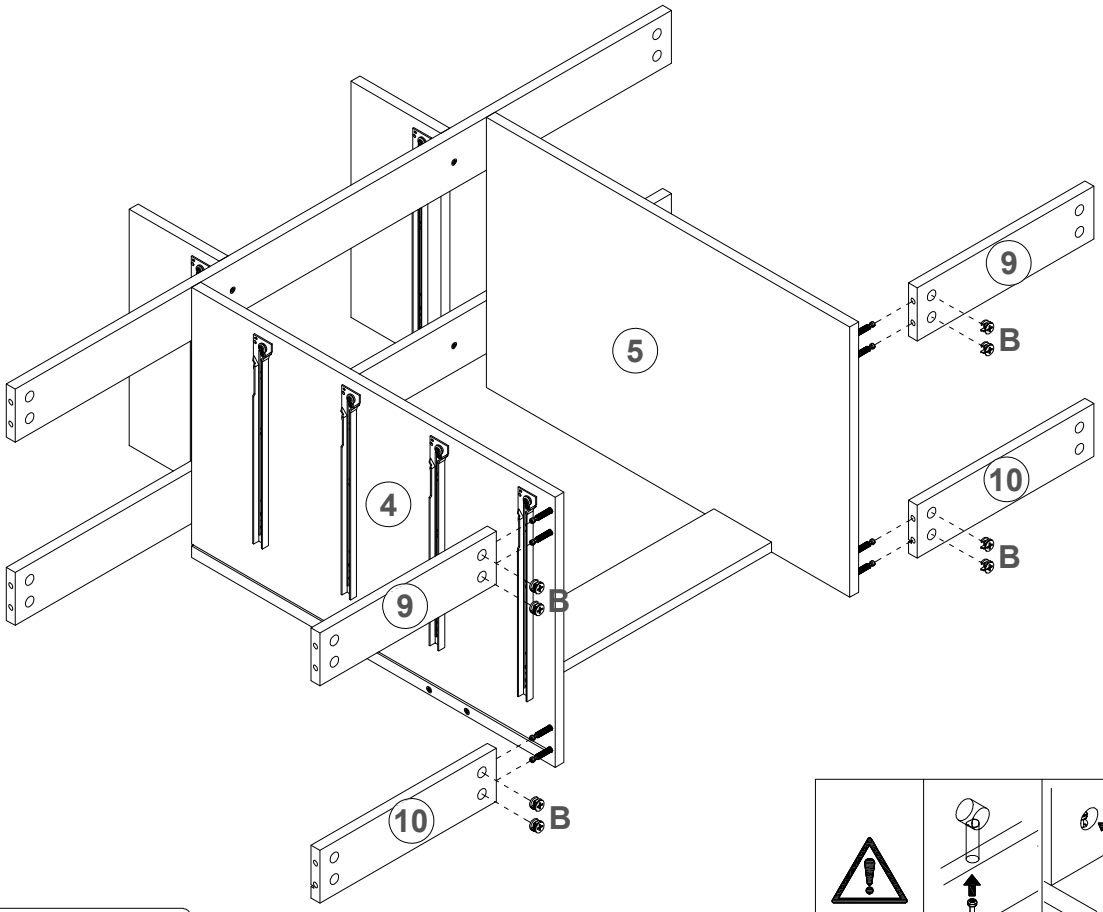

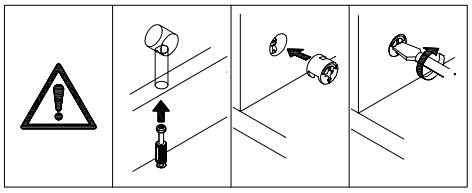

B X8 15x9.5mm

step8

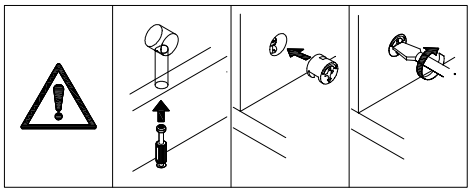

B X20 15x9.5mm

step9

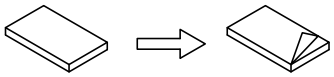

Peel off the film and stick it to the bottom of the cabinet feet.

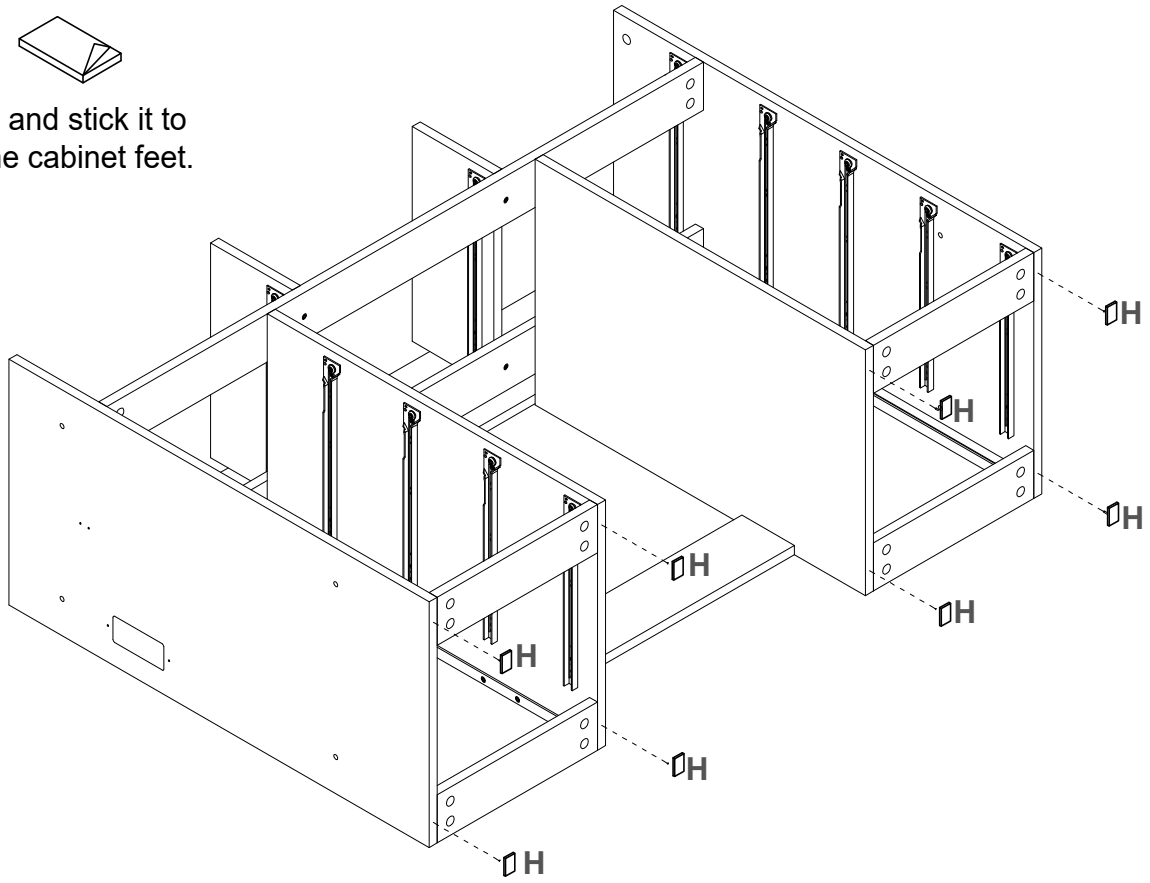

H X8 

step10

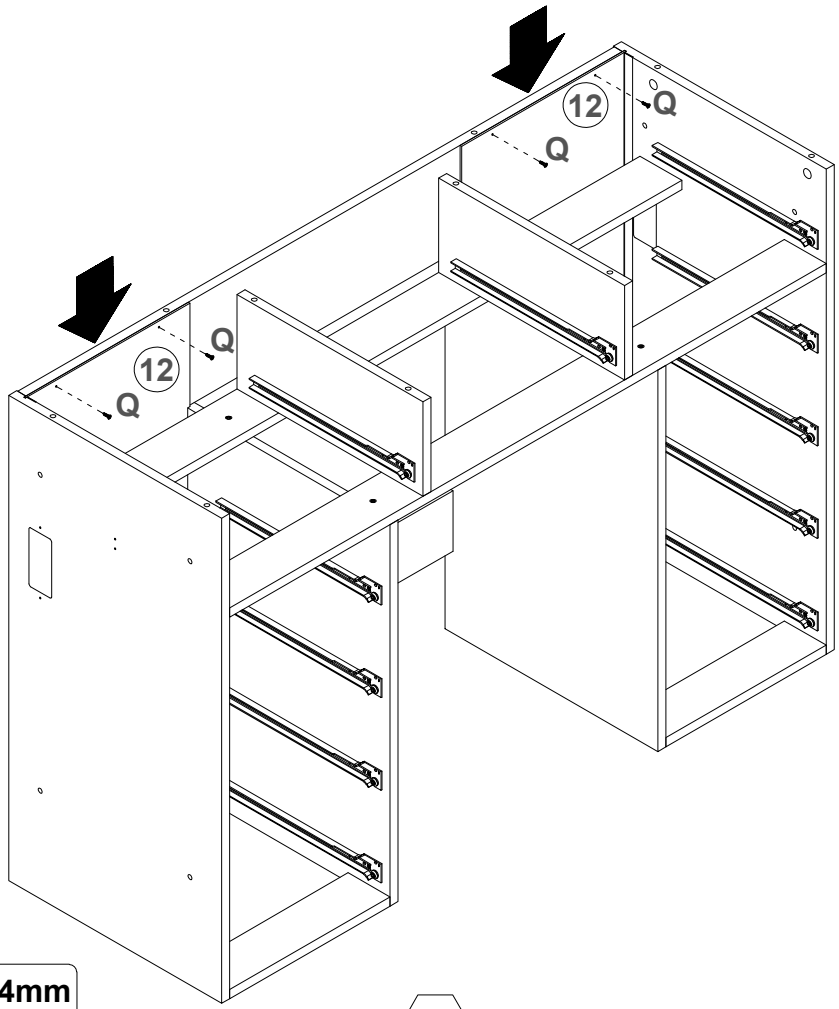

Q X4  **M3x14mm**

step11

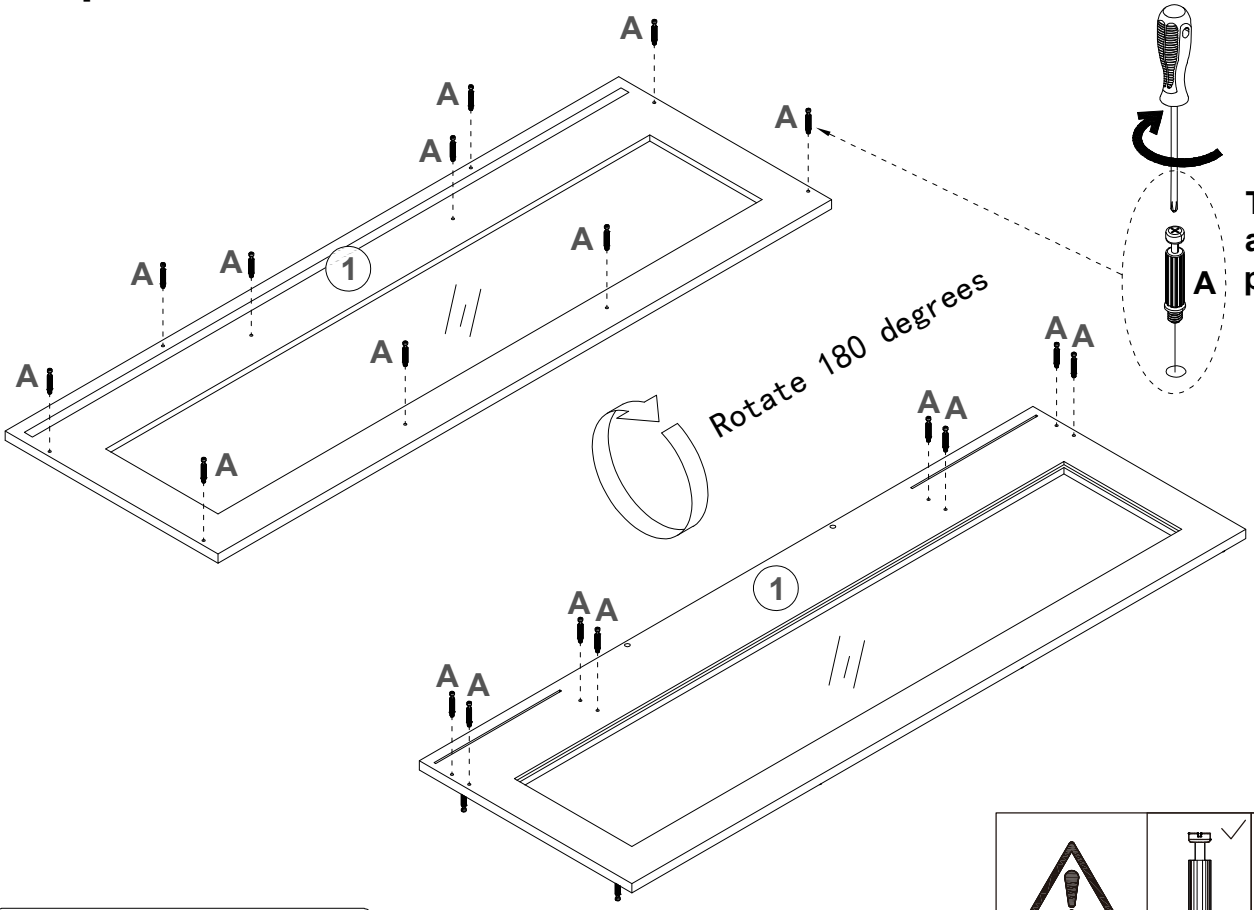

Tighten to the appropriate position

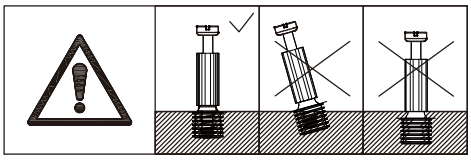

A X18 M7X40mm

step12

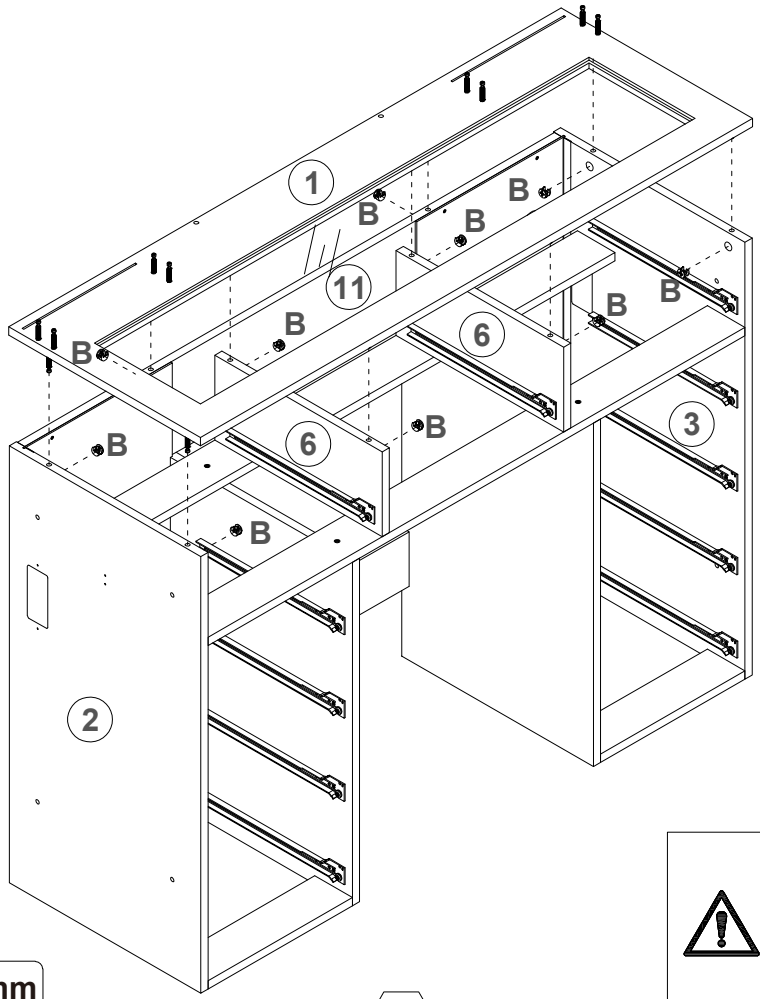

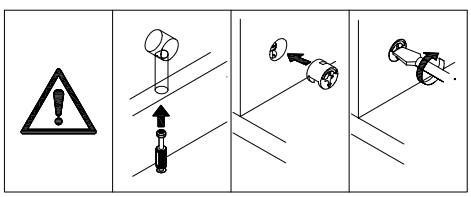

B X10 15x9.5mm

step13

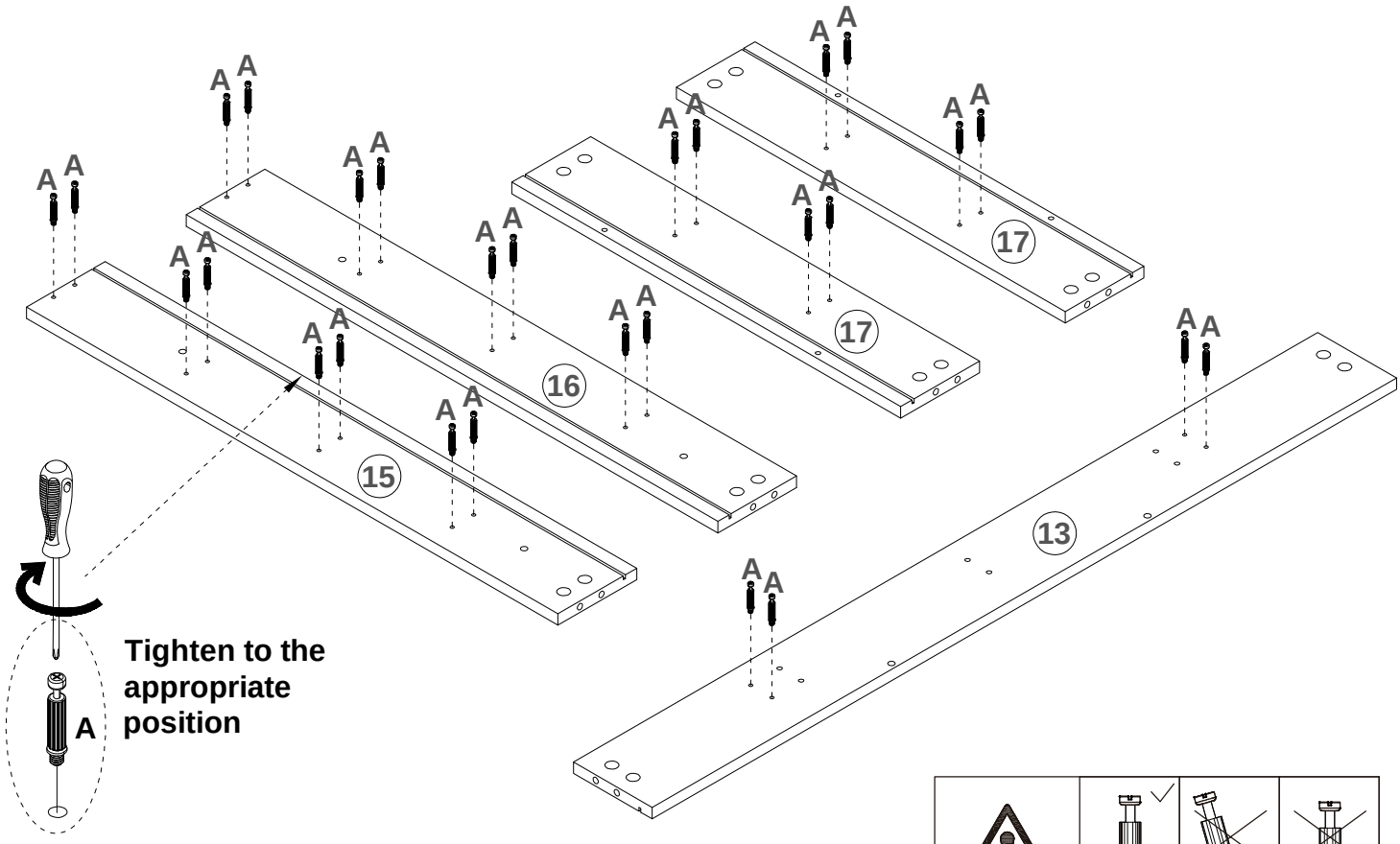

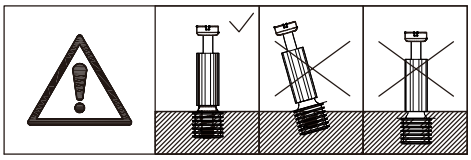

A X28 M7X40mm

step14

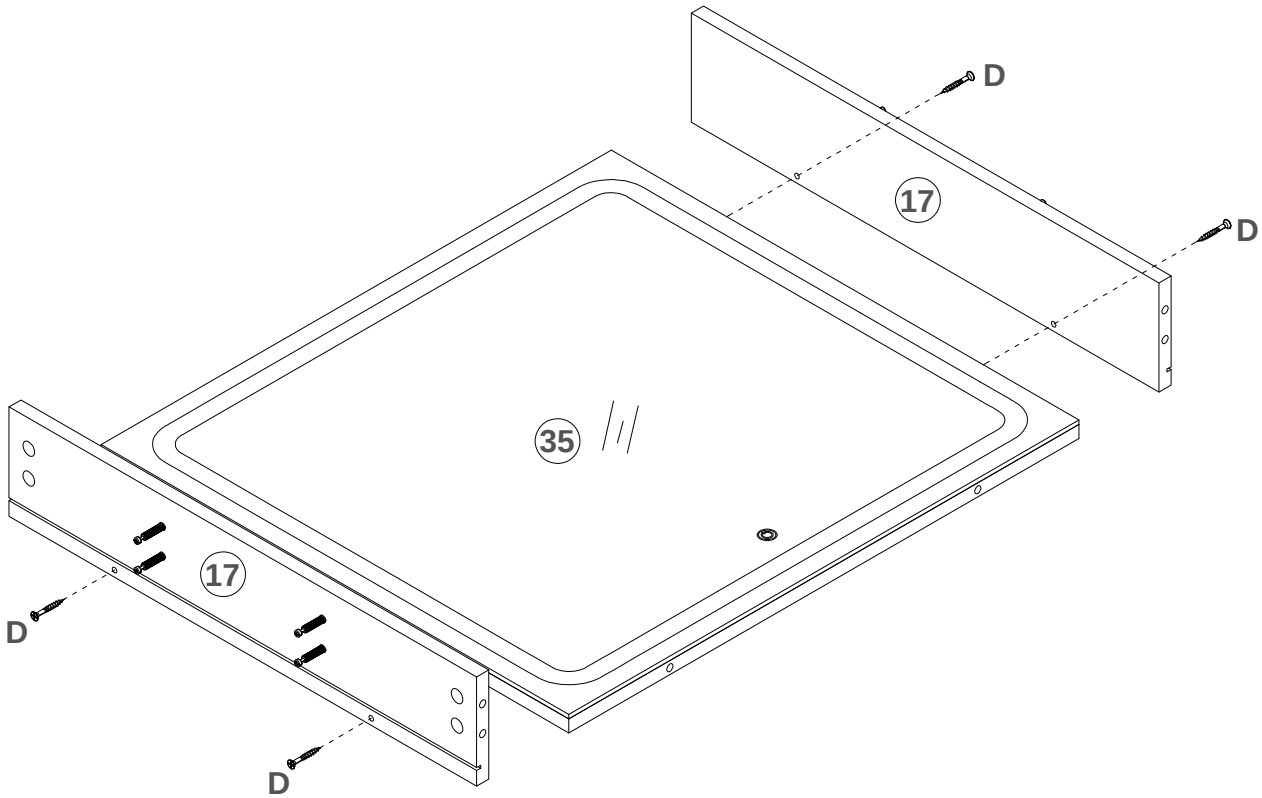

D X4 M4x40mm

step15

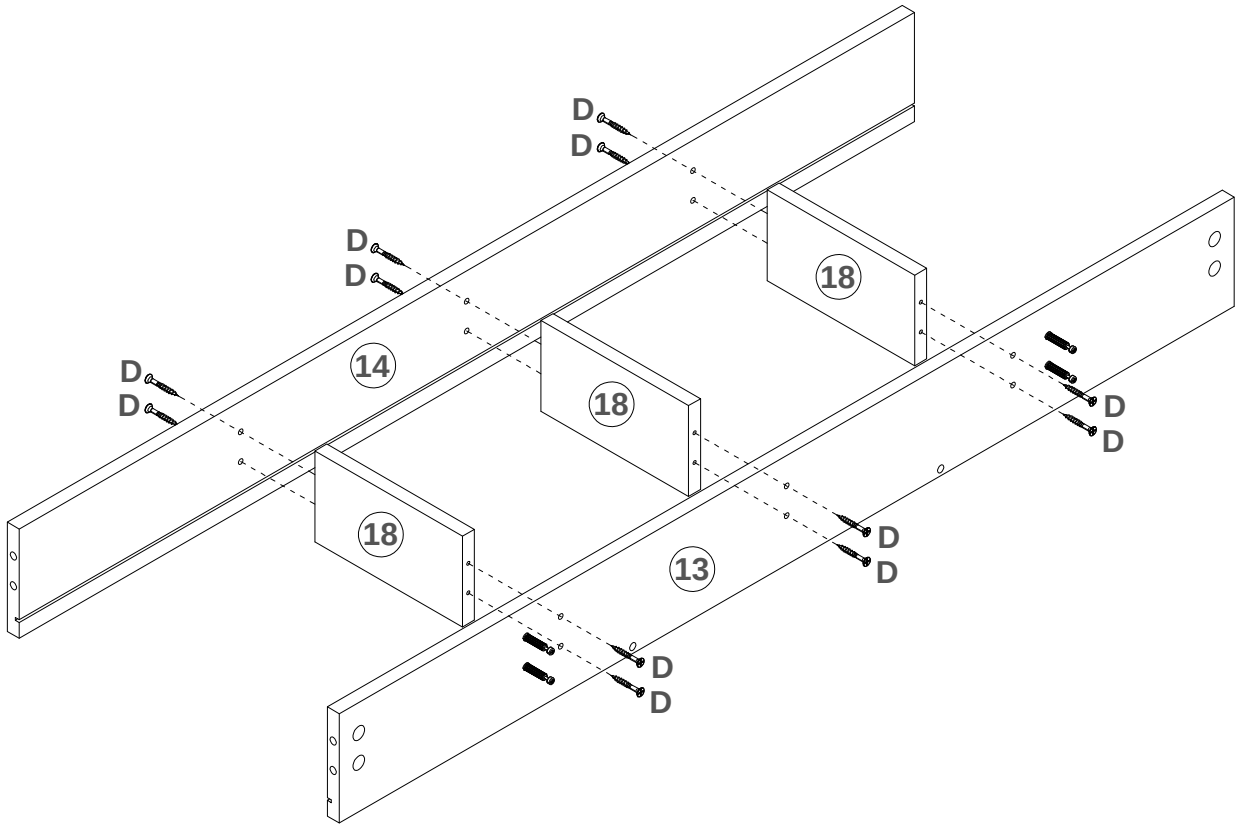

D X12 M4x40mm

step16

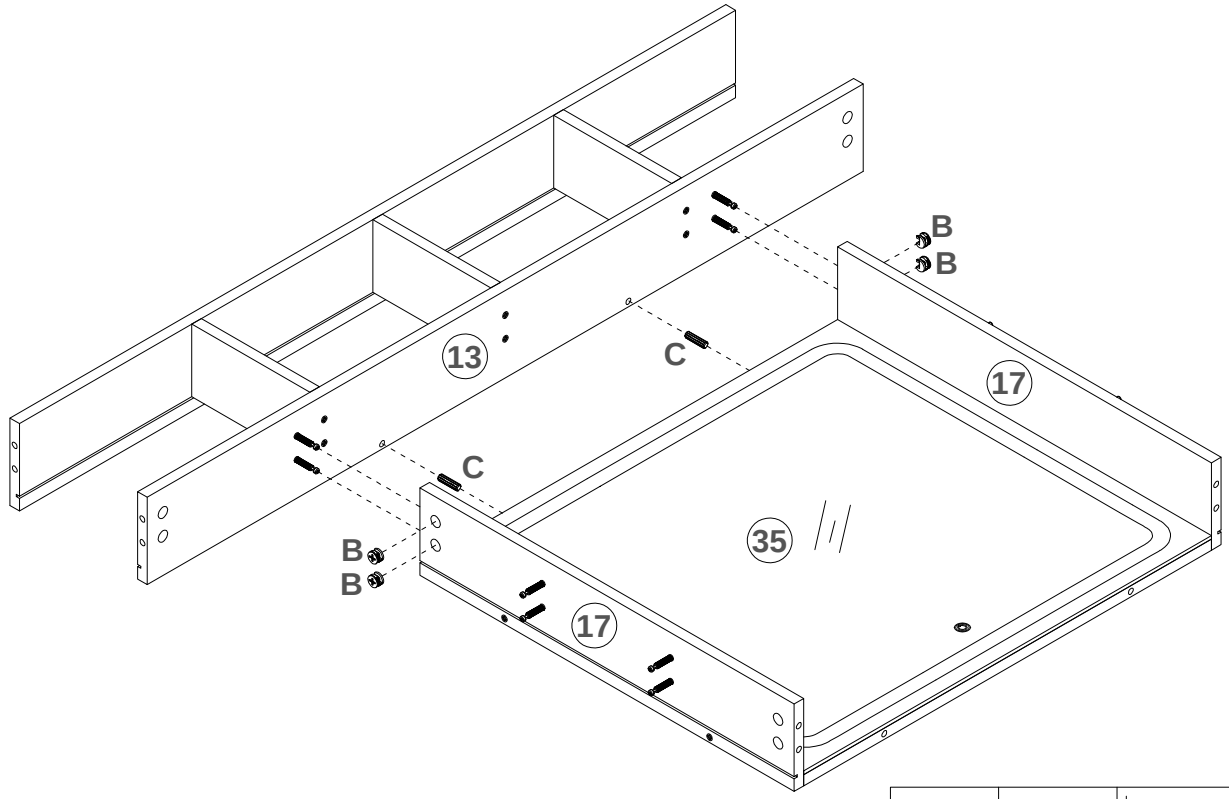

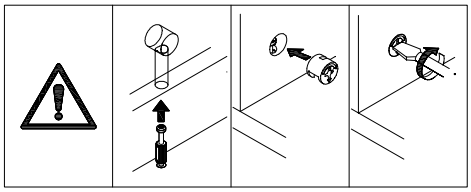

C X2 Ø6X30mm

B X4 Ø15x9.5mm

step17

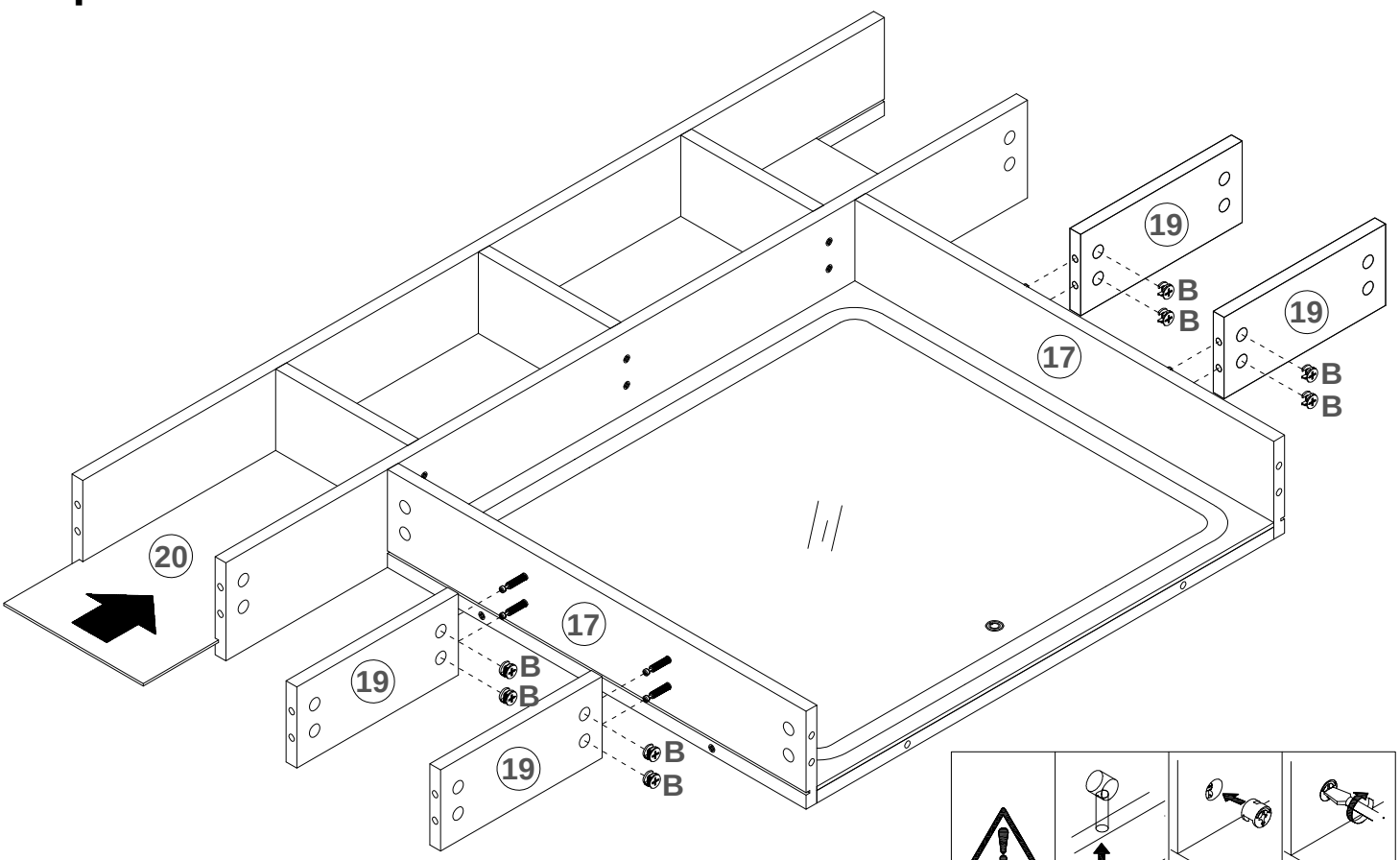

B X8 Ø15x9.5mm

step18

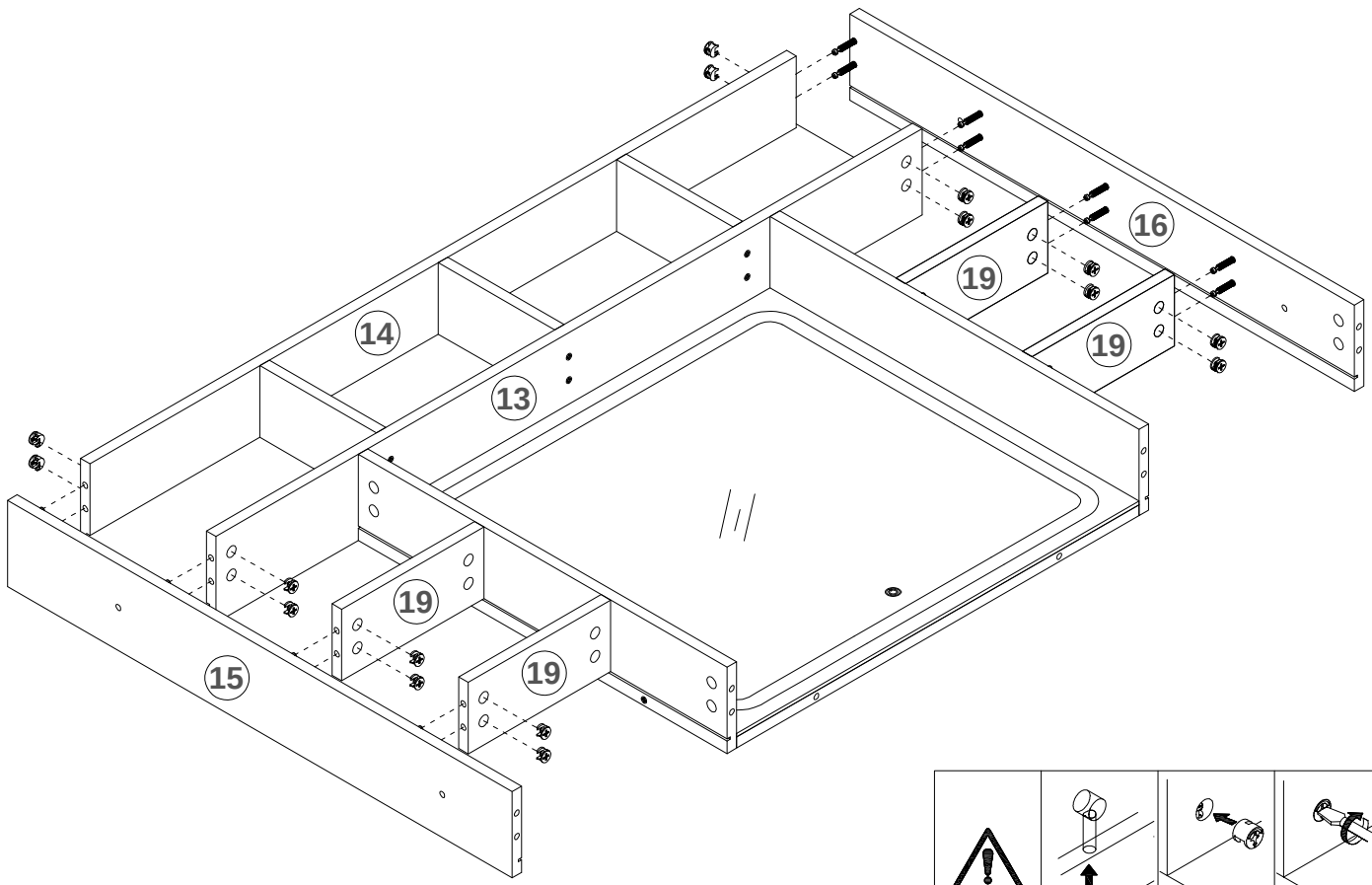

B X16 Ø15x9.5mm

step19

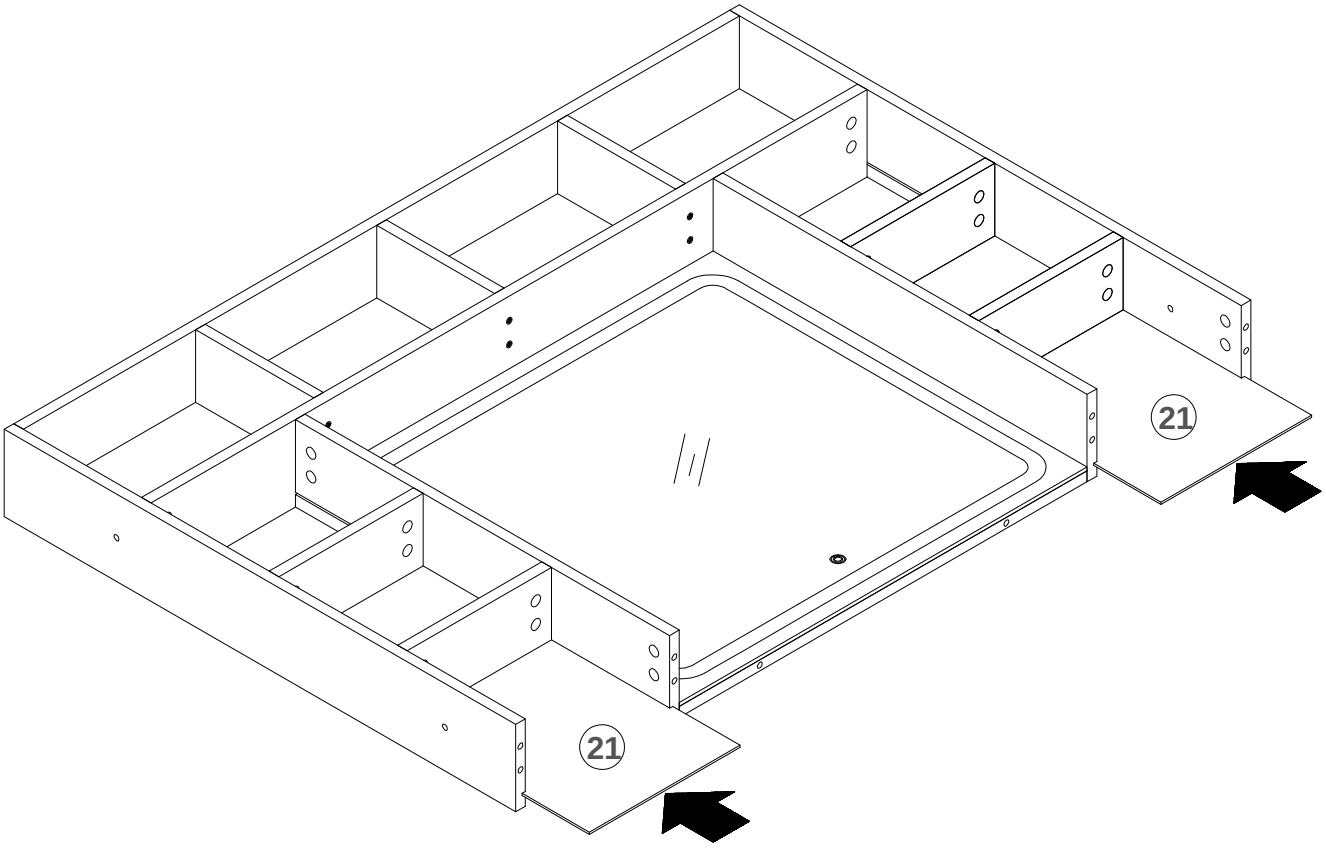

step20

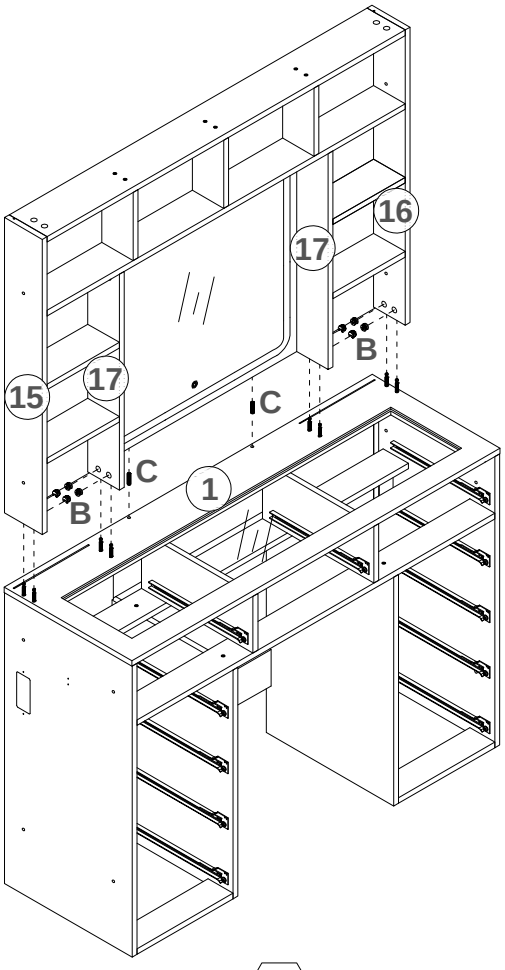

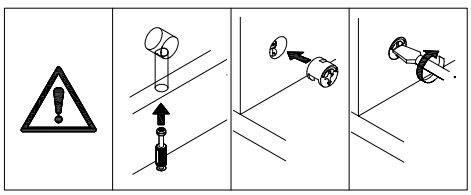

C X2 Ø6X30mm

B X8 Ø15x9.5mm

step21

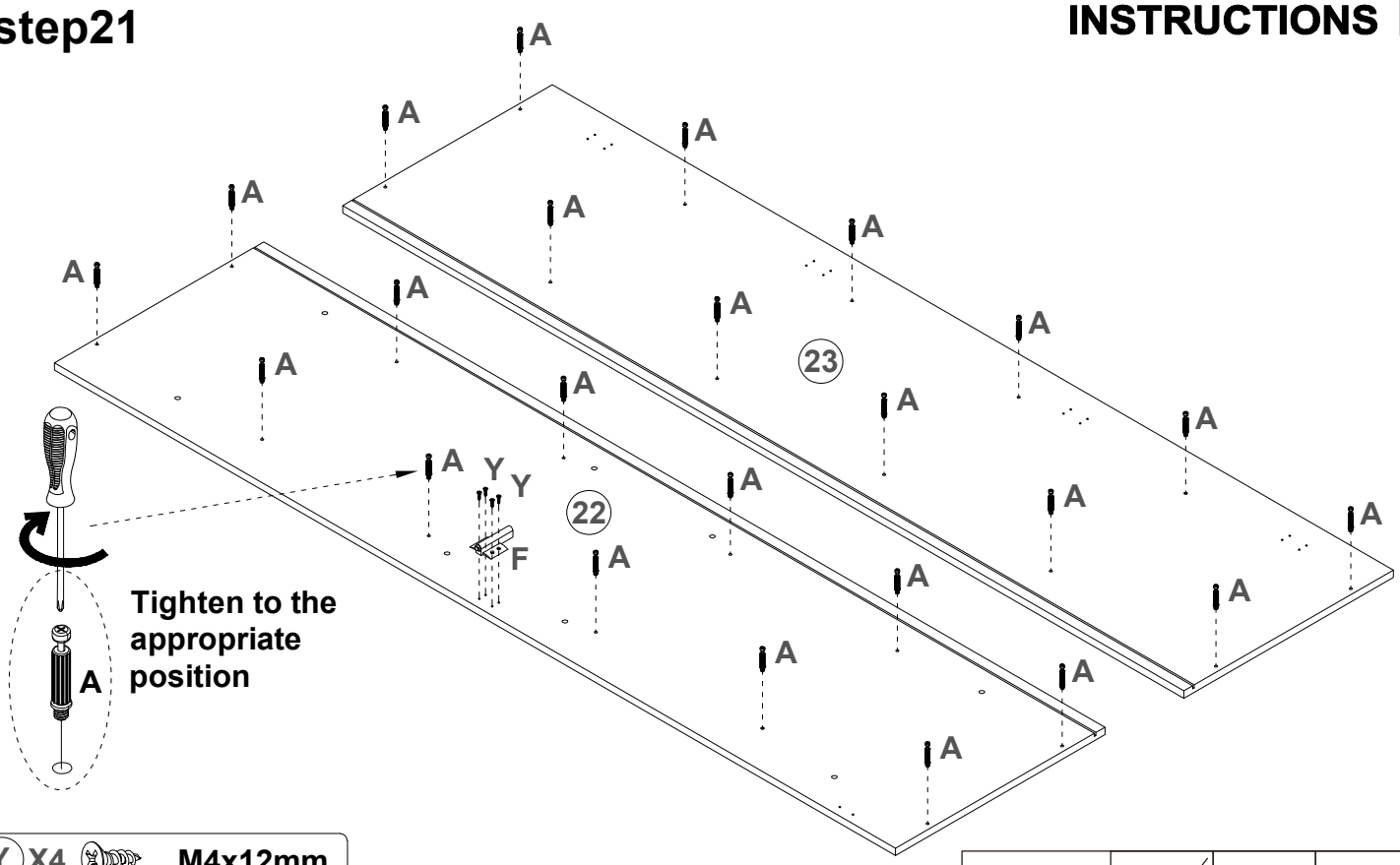

Y X4 M4x12mm

F X1

A X24 M7X40mm

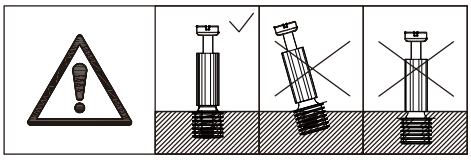

step22

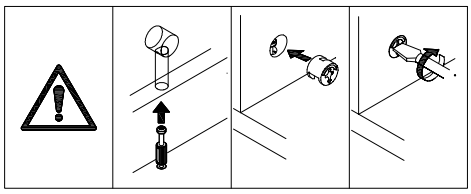

B X12 15x9.5mm

step23

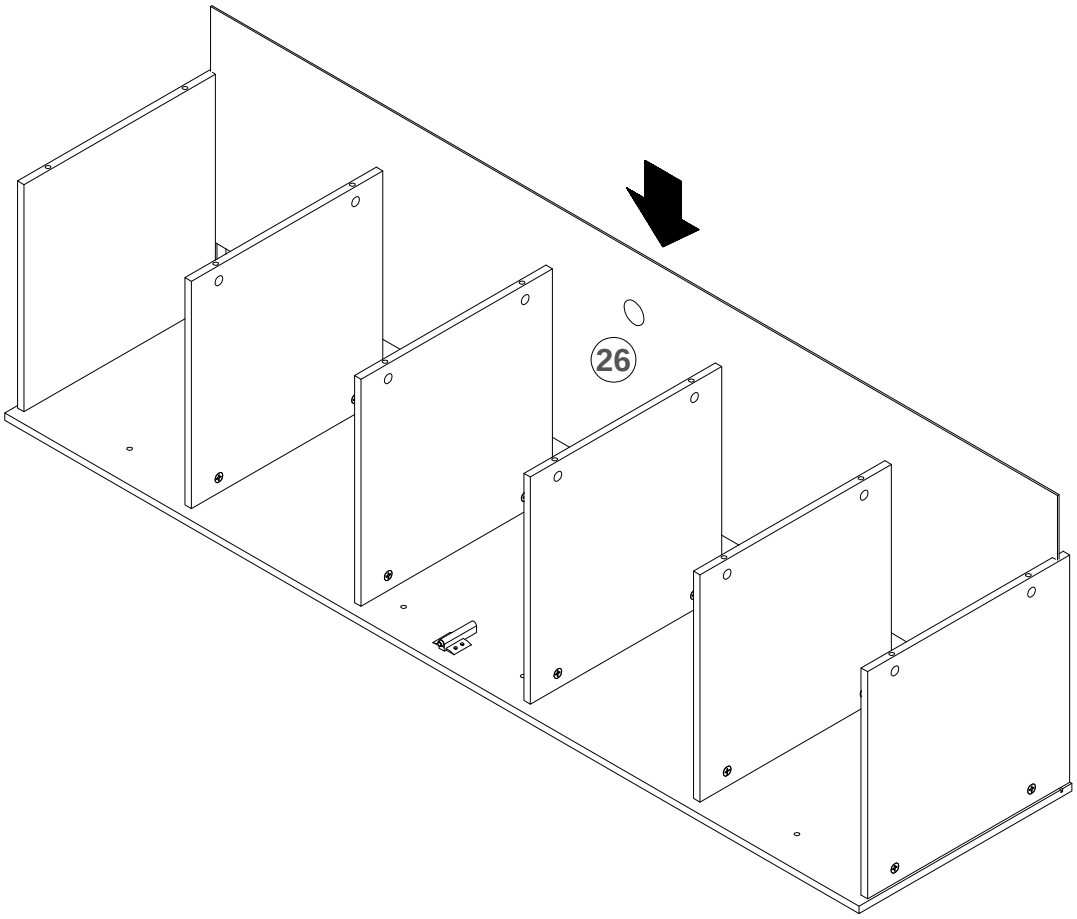

step24

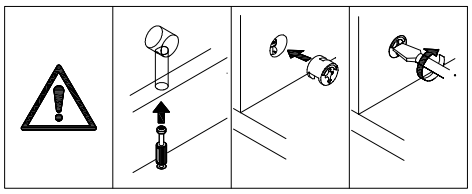

B X12 Ø15x9.5mm

step25

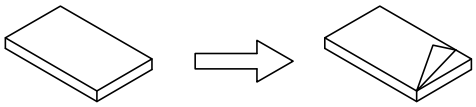

Peel off the film and stick it to the bottom of the cabinet feet.

H X4 

step26

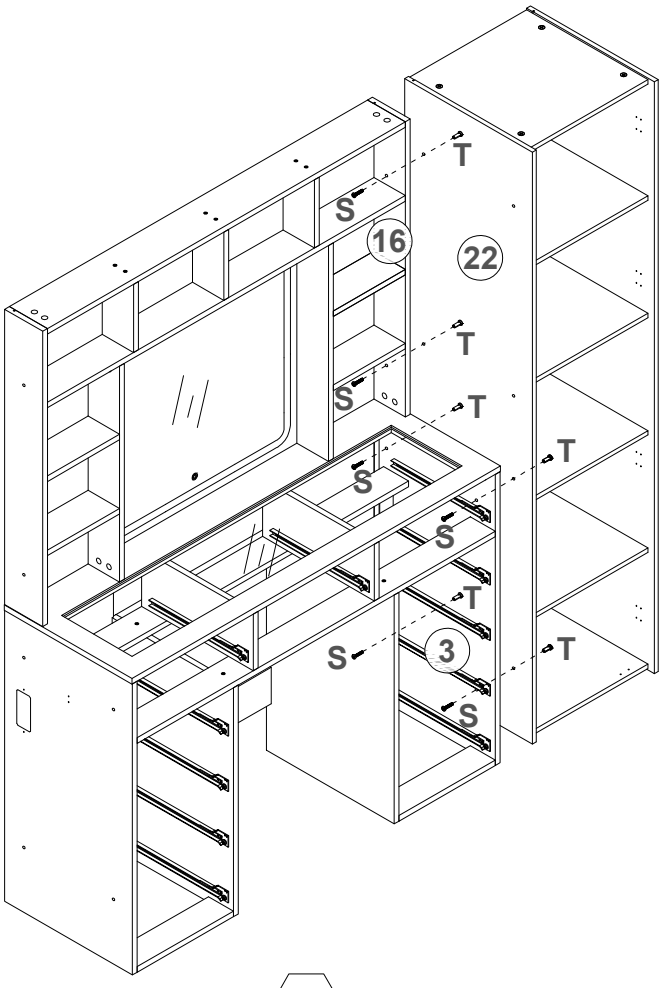

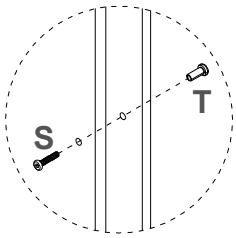

T X6  M6x12mm

S X6  M6x20mm

step27

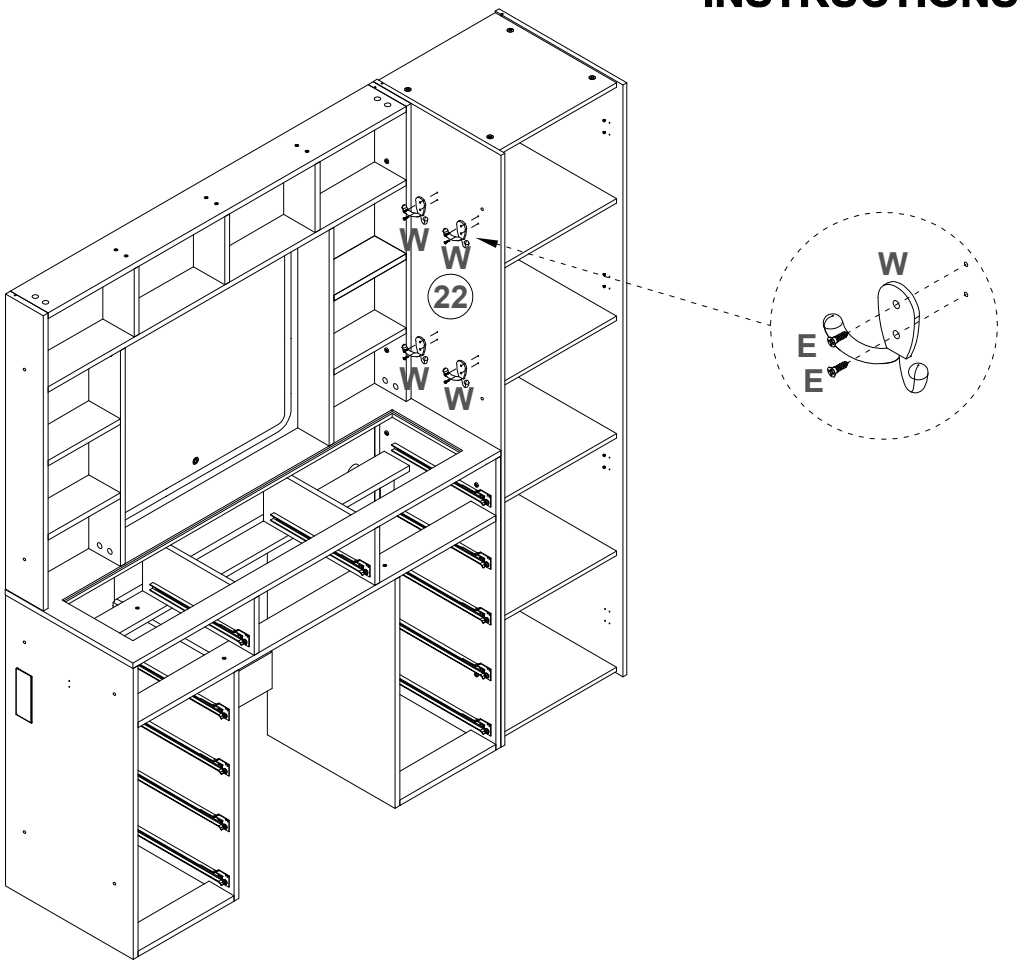

E X8 M3.5x12mm

W X4

step28

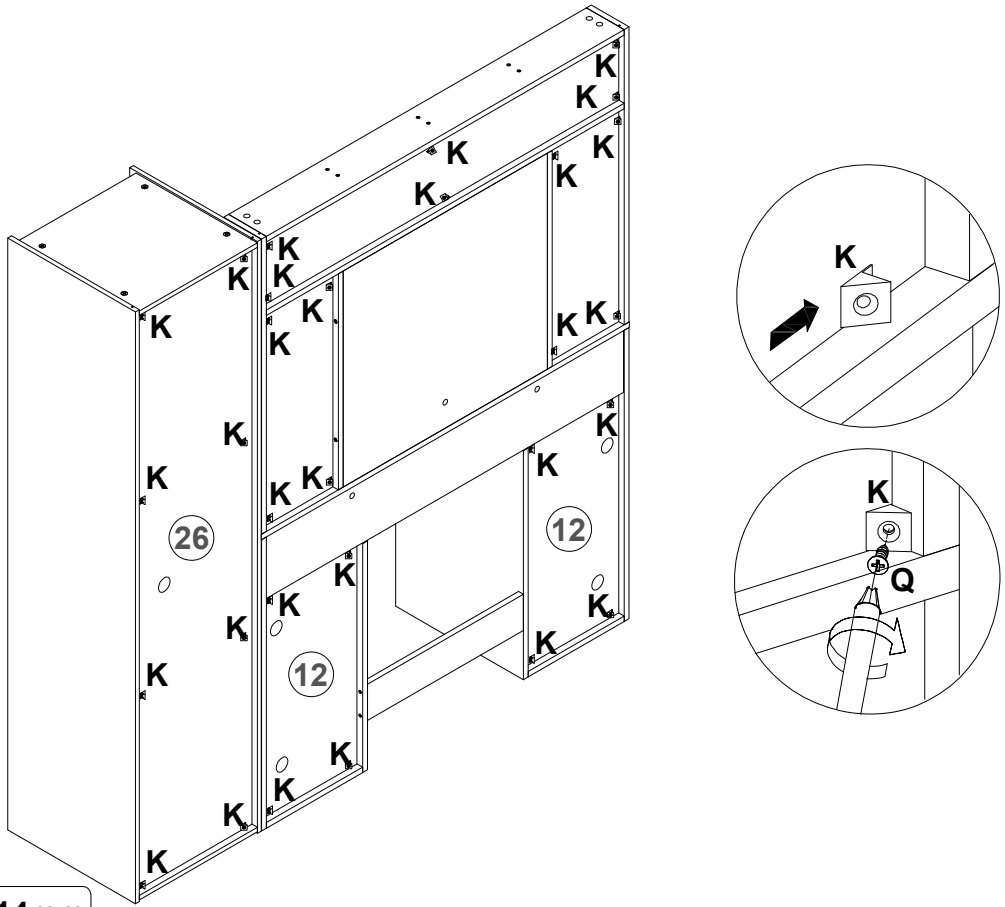

Q X30 M3x14mm

K X30

step29

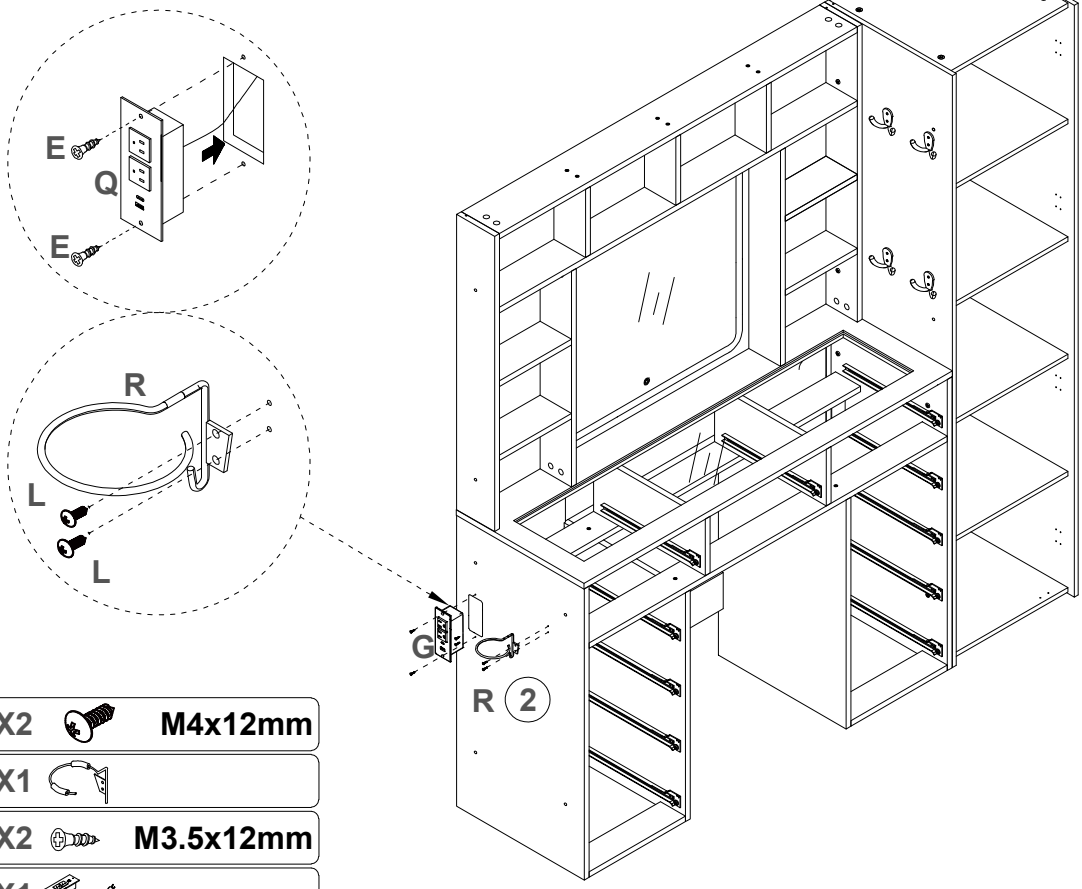

L	X2	M4x12mm
R	X1	
E	X2	M3.5x12mm
G	X1	

step30

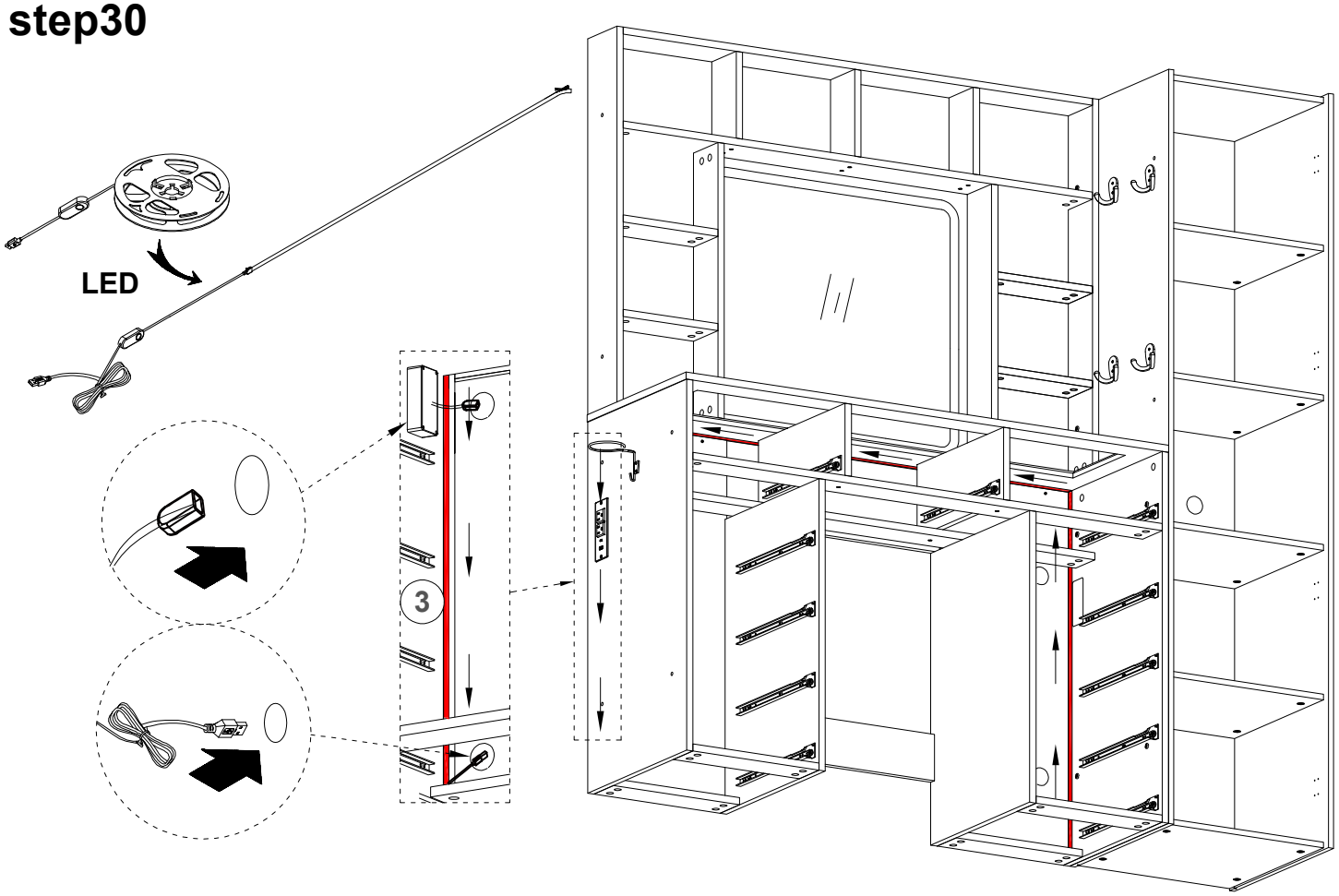

I	X1	LED

step31

X8

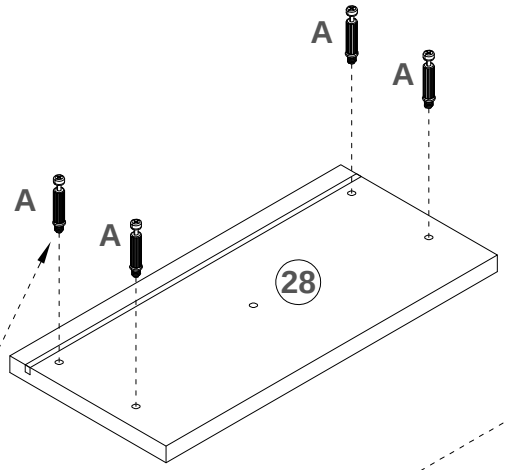

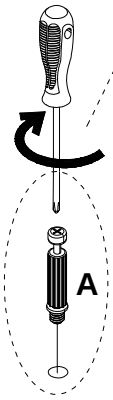

Tighten to the appropriate position

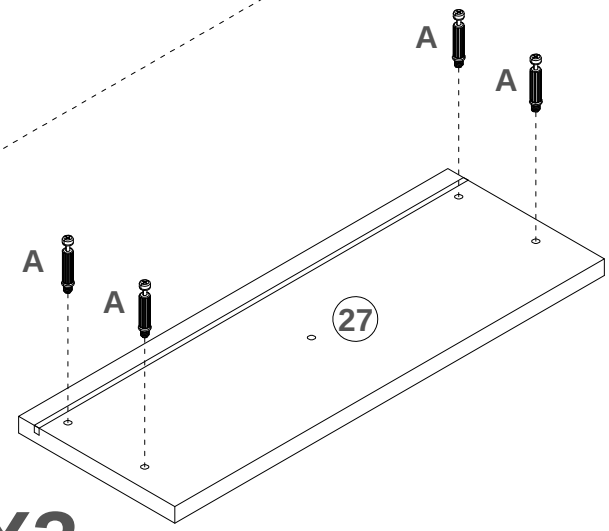

X3

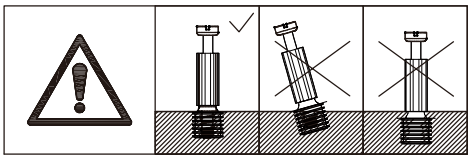

(A) X44  M7X40mm

step32

X8

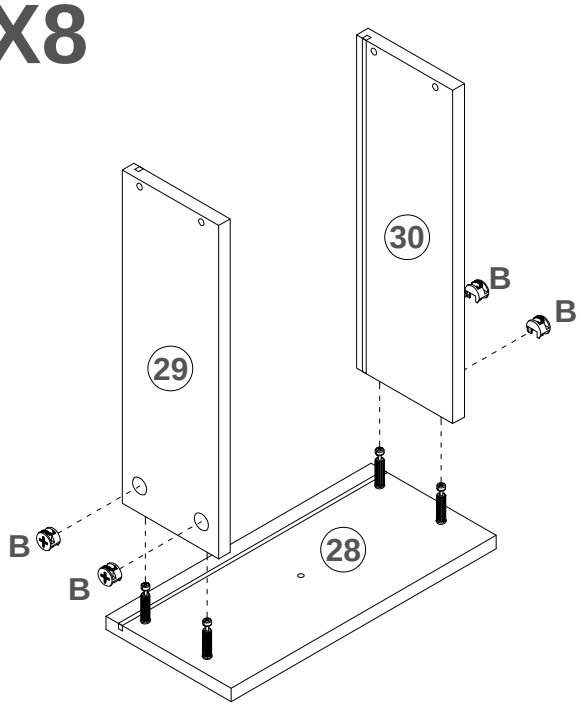

X3

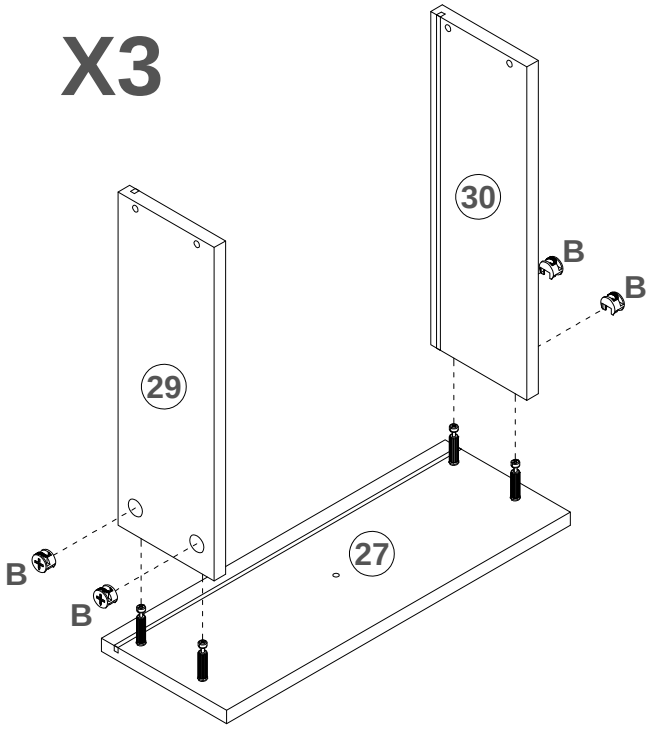

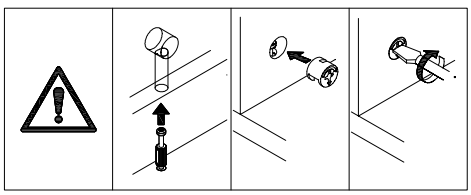

(B) X44  Ø15x9.5mm

step33

X8

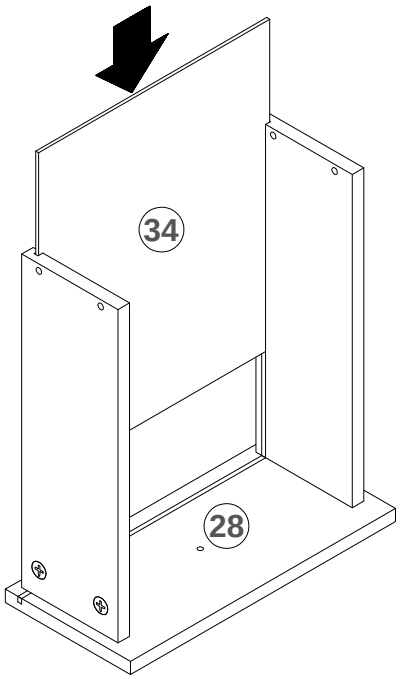

X3

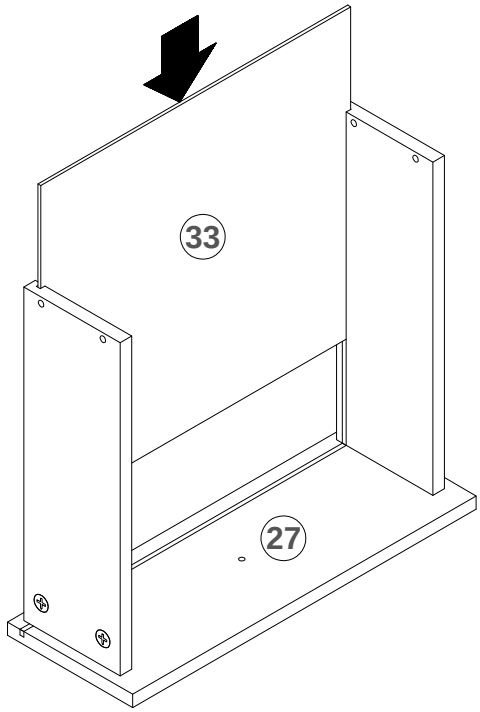

step34

X8

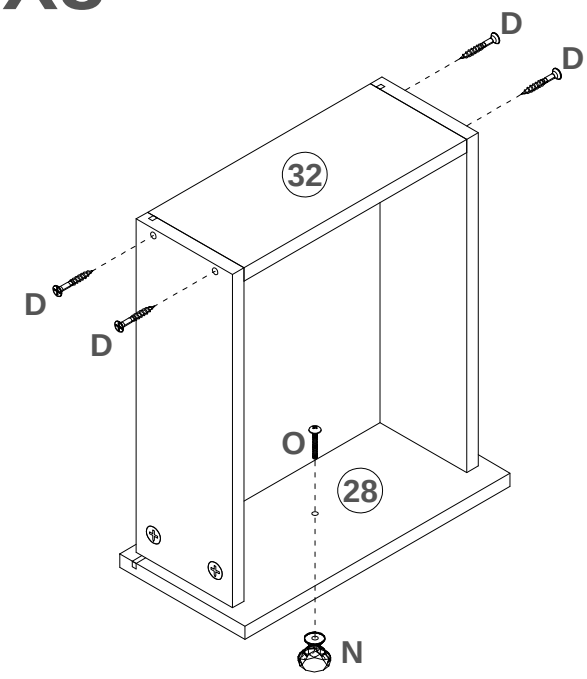

X3

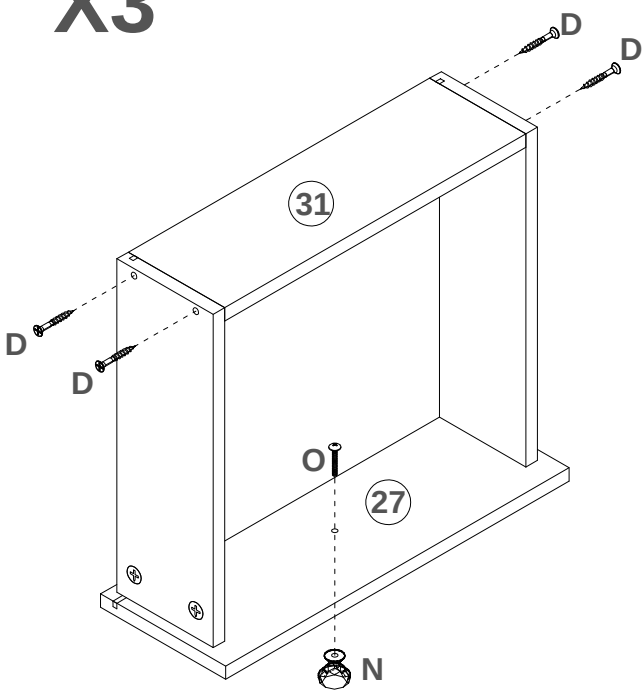

N	X11	
O	X11	M4x14mm
D	X44	M4x40mm

step35

X3

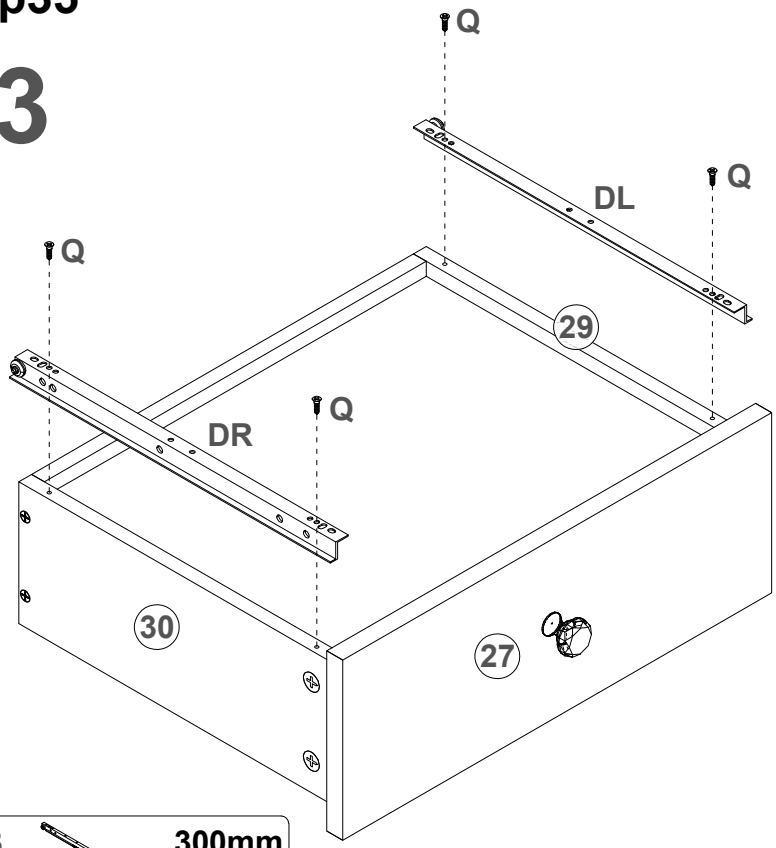

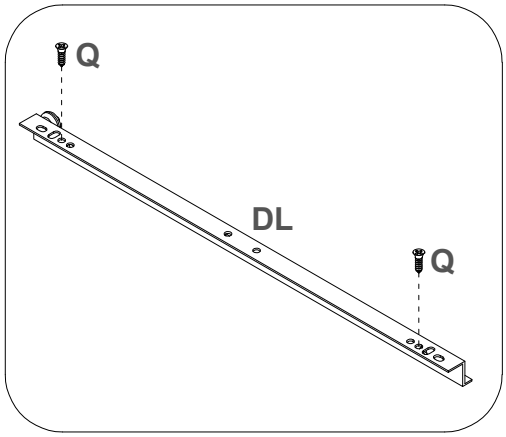

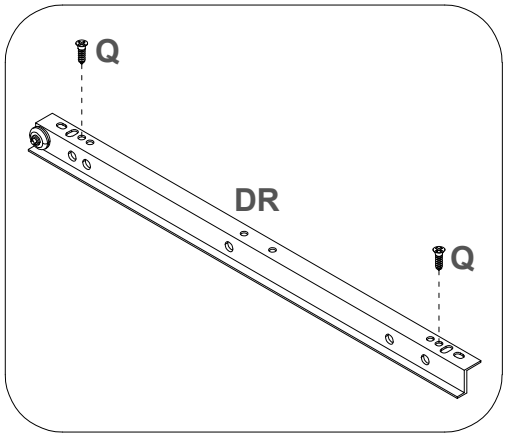

DR	X3	300mm
DL	X3	300mm
Q	X12	M3x14mm

step36

X8

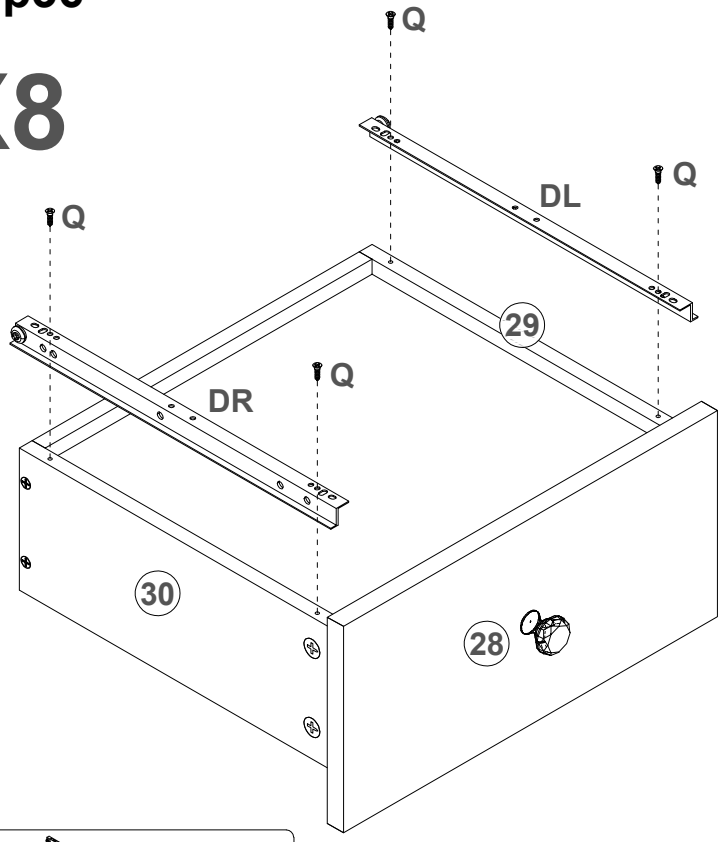

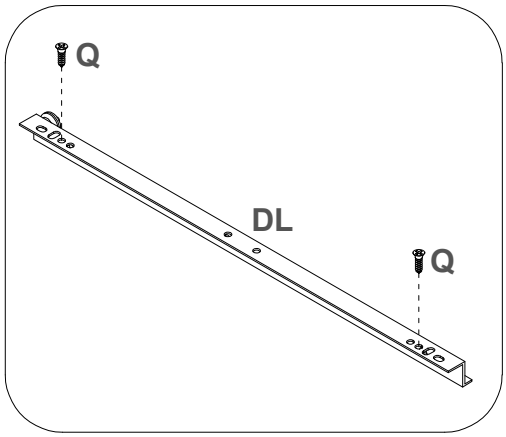

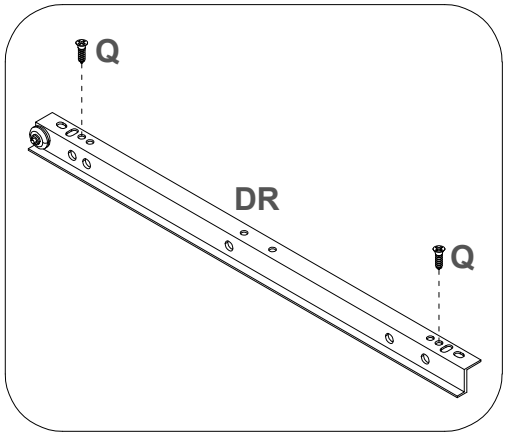

DR	X8	300mm
DL	X8	300mm
Q	X32	M3x14mm

step37

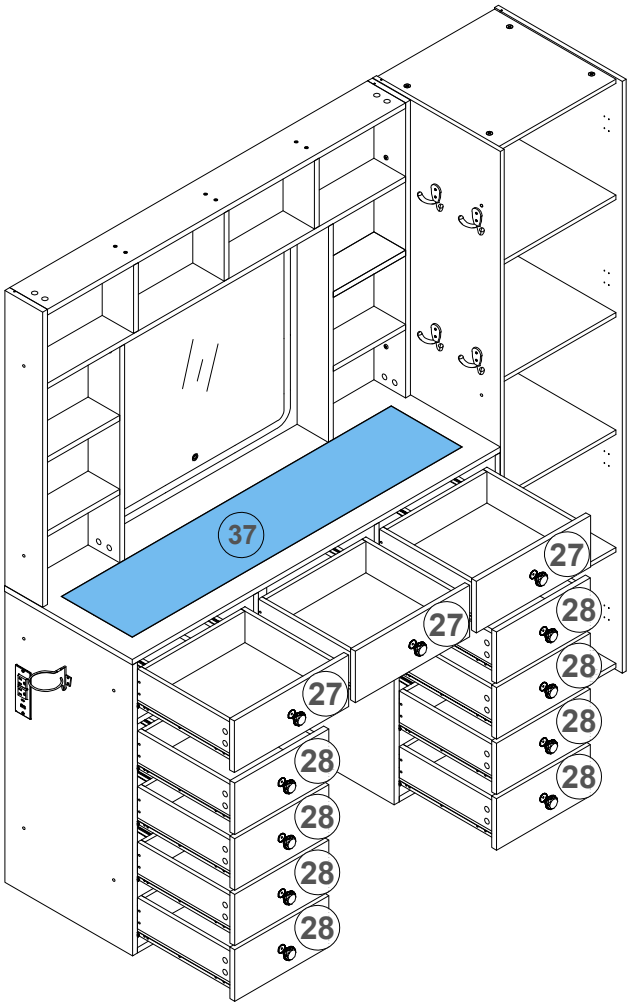

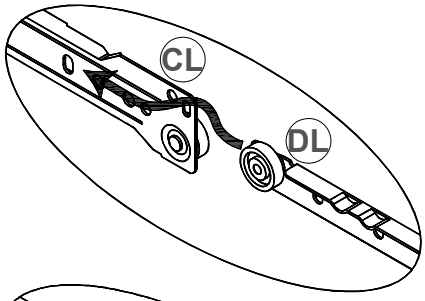

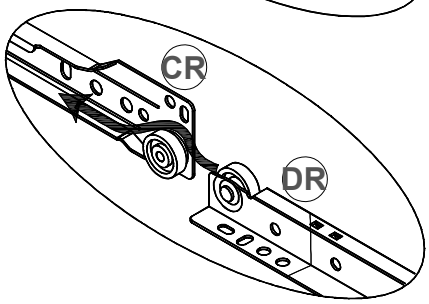

step38

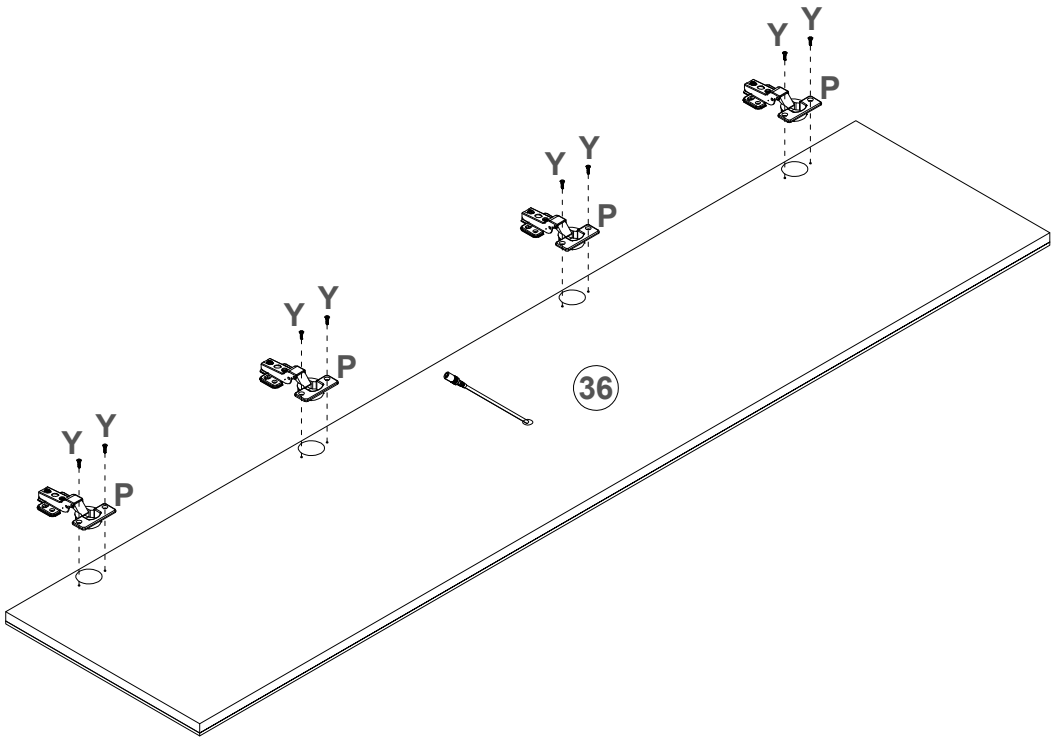

P X4		Ø35
Y X8		M4x12mm

step39

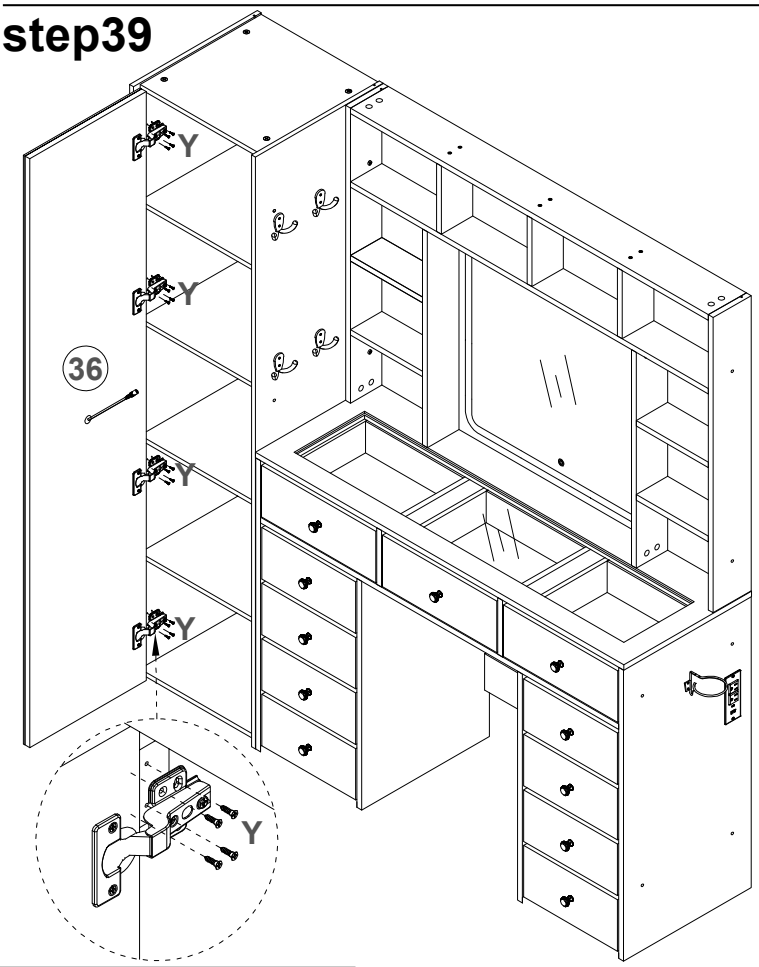

Y X16 M4x12mm

Then you've come to the right place.Follow the illustrations below to get your cabinet door aligned and ready for action.

If your door is too low or too high...

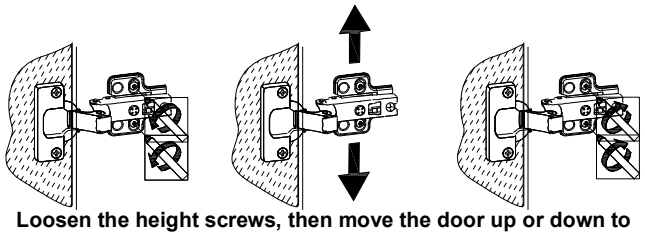

Loosen the height screws, then move the door up or down to make it level.

If the space between your doors is off...

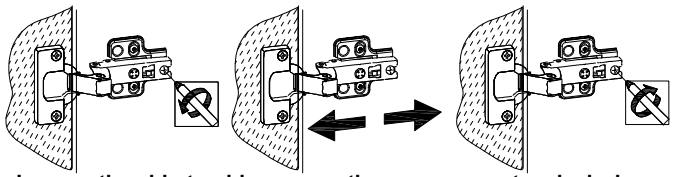

Loosen the side-to-side screws, then screw counter-clockwise to make the gap wider or clockwise to close any gaps.

If you need to adjust the depth of the doors...

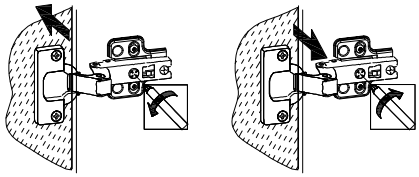

Adjust the in-and-out screws until the door is aligned with the side of the cabinet.

How to adjust lotus leaves

step40

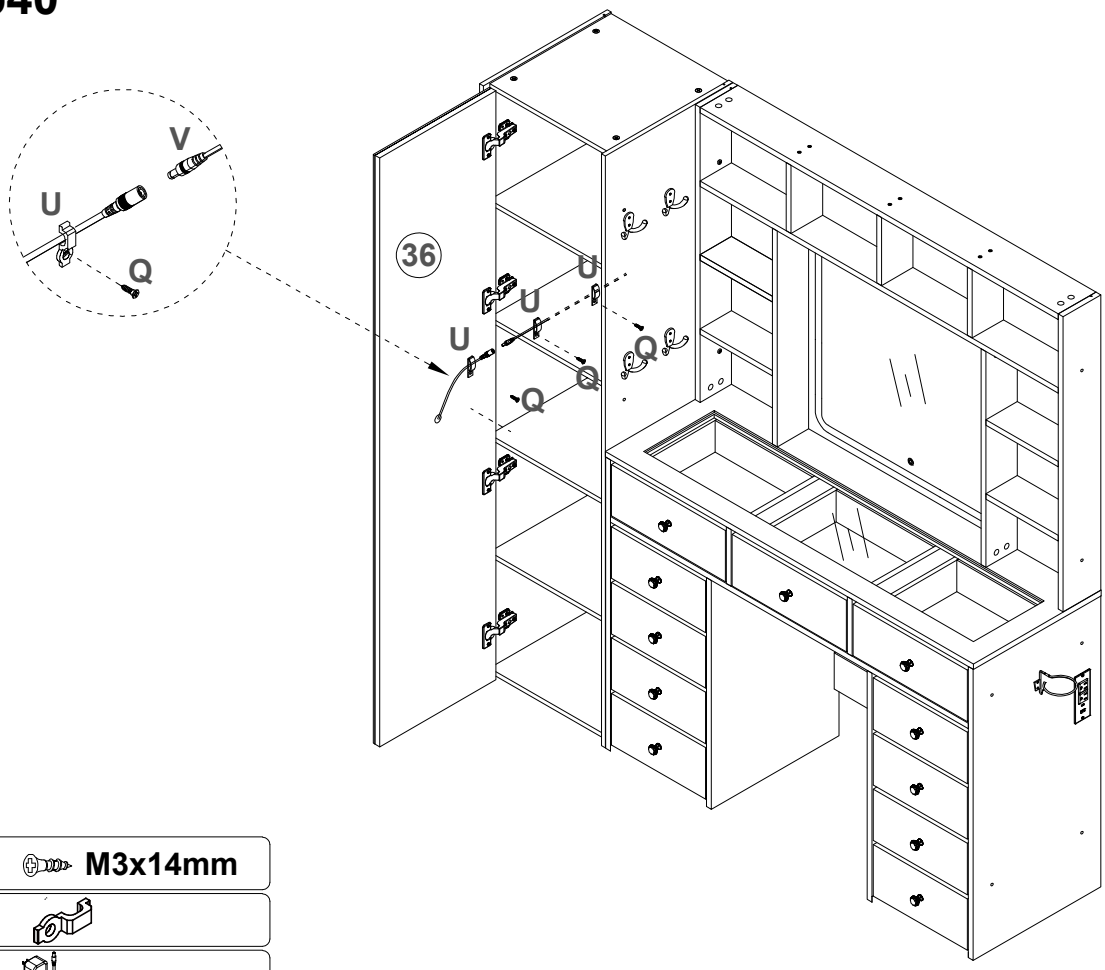

Q X3 M3x14mm

U X3

V X1

step41

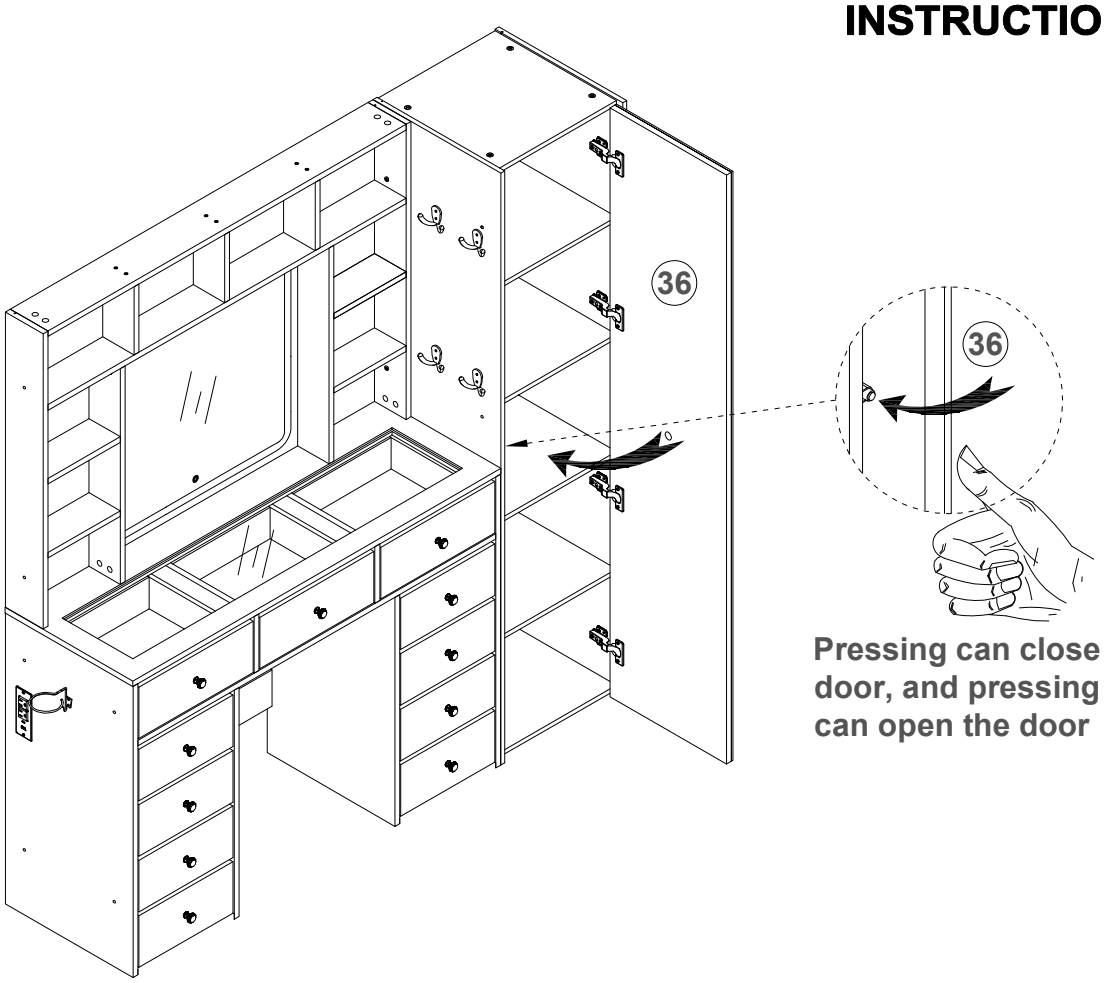

Pressing can close the door, and pressing again can open the door

step42

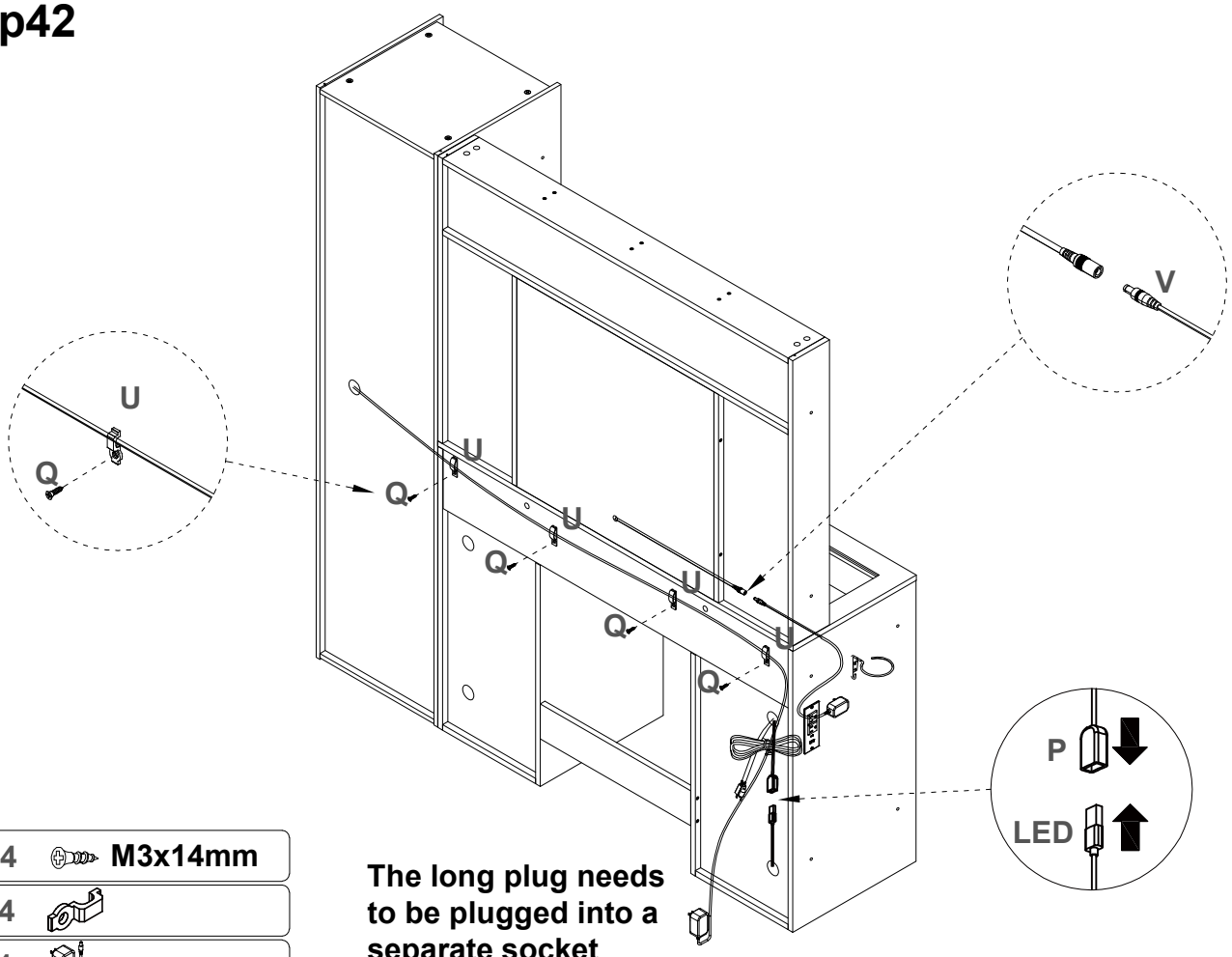

Q X4	M3x14mm
U X4	
V X1	

The long plug needs to be plugged into a separate socket

step43

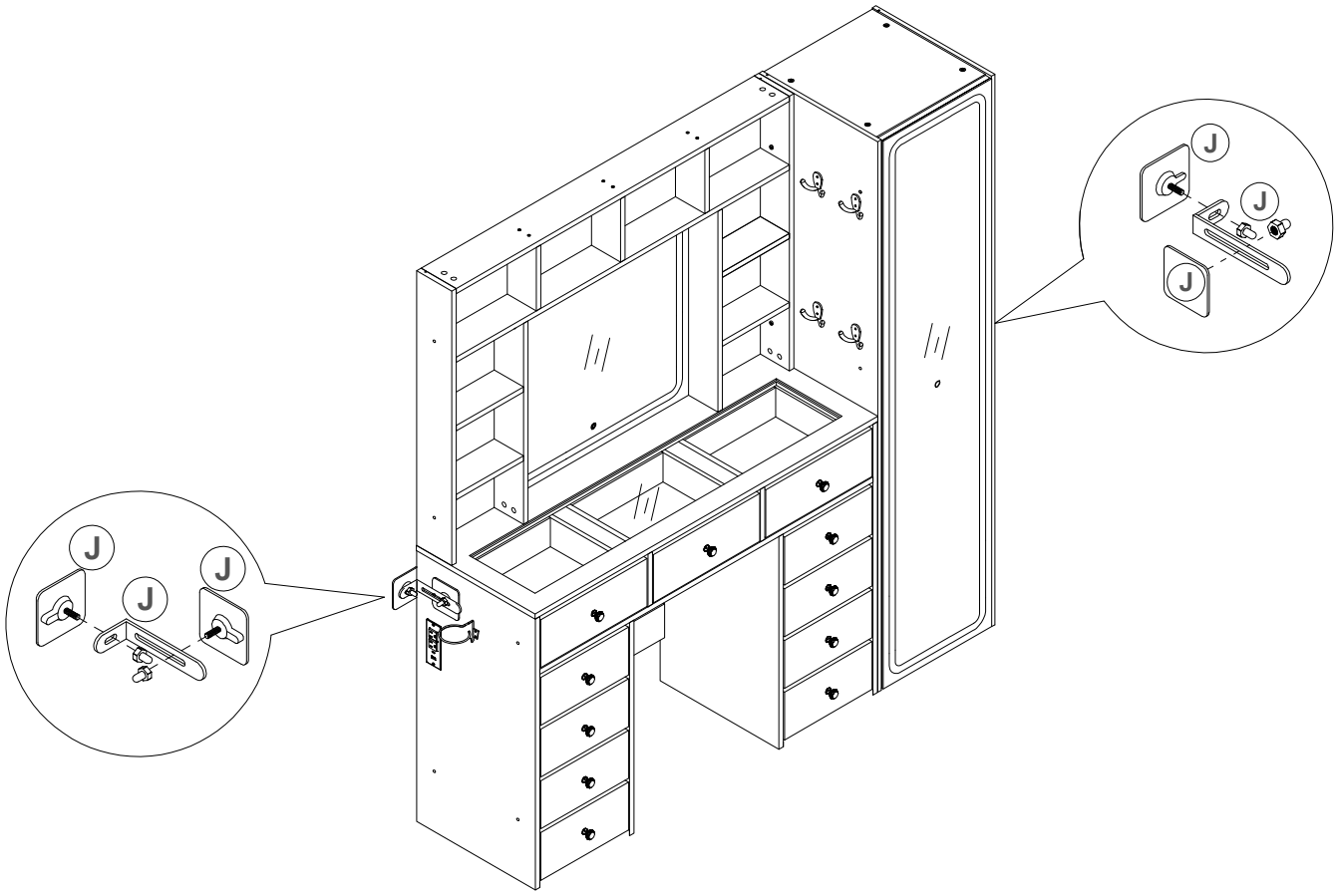

J X2

step44

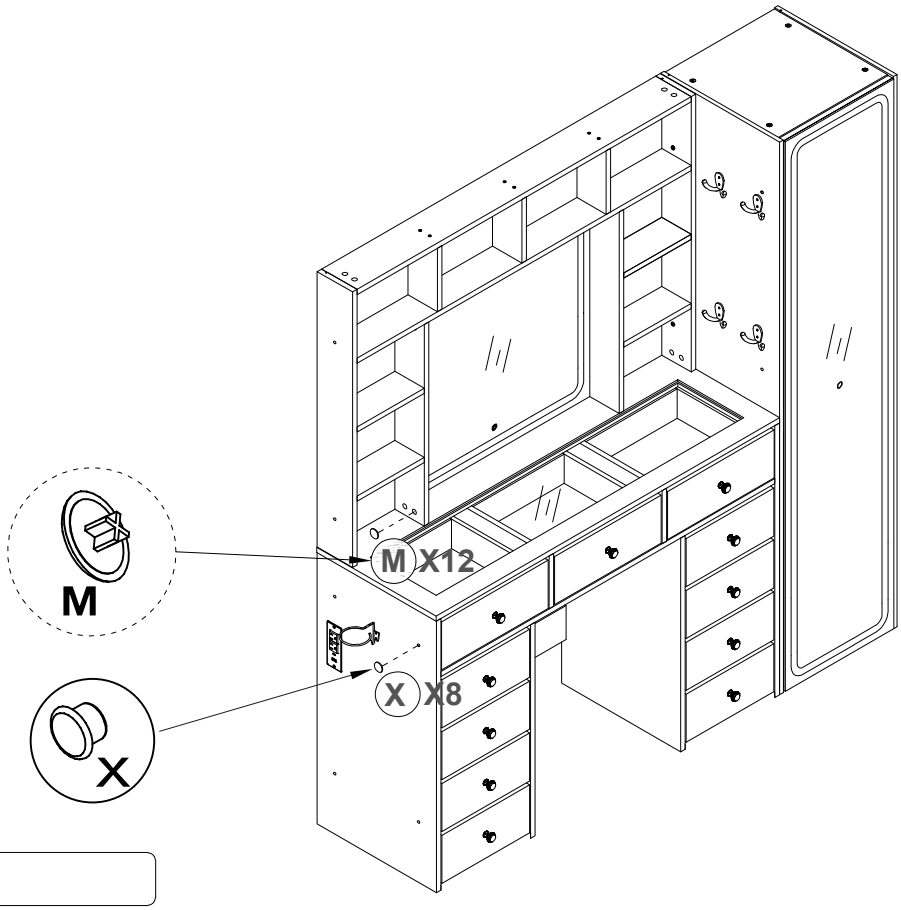

X X8

M X12 Ø17mm