ASSEMBLY INSTRUCTIONS

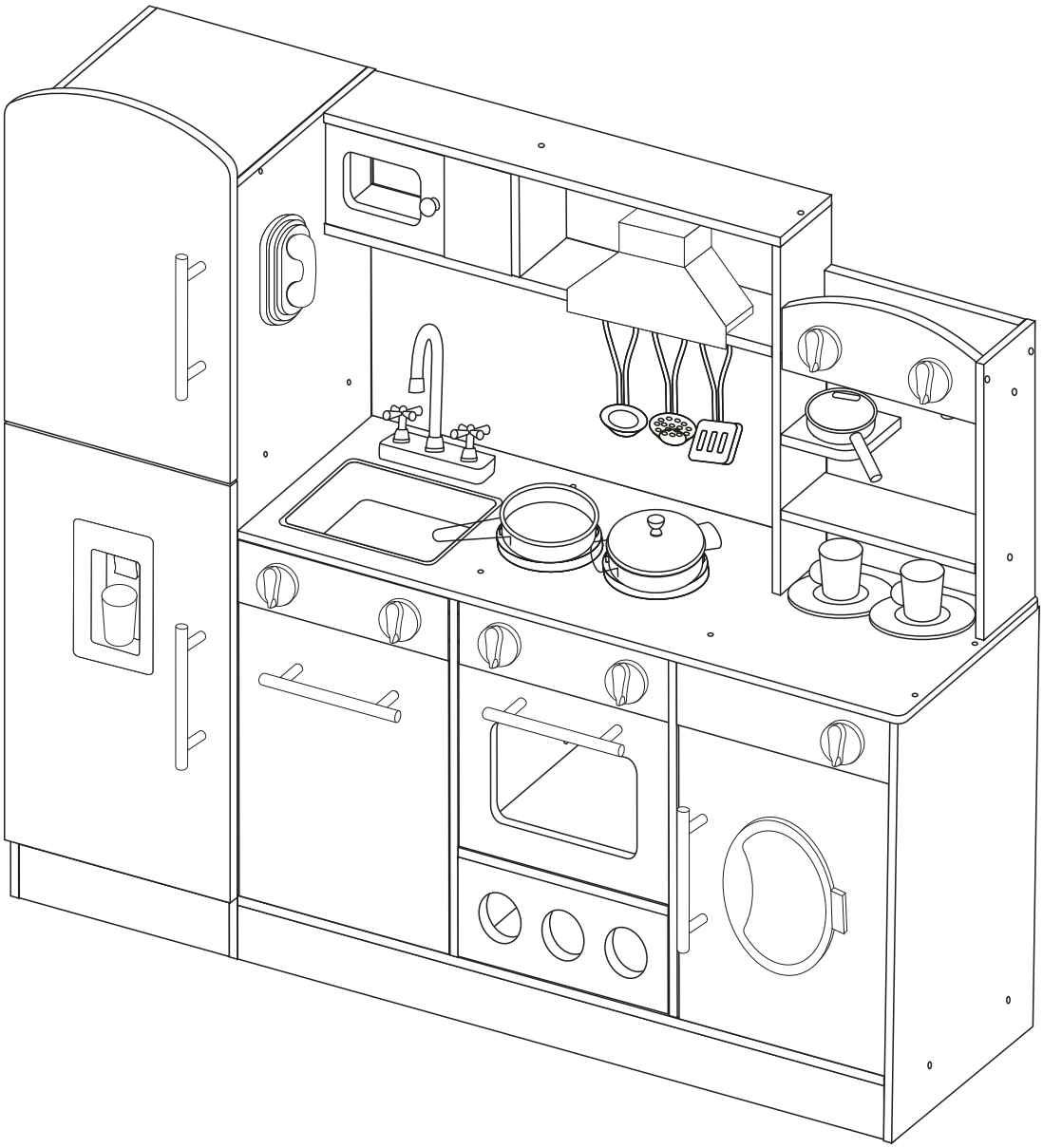

BBK113

If you have any question about the installation, please do not hesitate to contact us, we will reply to you within 24 hours and do our best to help you solve all problems.

Email: service@replycenter.net



WARNING:
CHOKING HAZARD
-Small parts.
Not for children under 3 years.

Warning for Assembly

- ⚠ Remove all packaging, separate and count all parts and hardware.
- ⚠ Read through each step carefully and follow the proper order.
- ⚠ We recommend that, where possible, all items are assembled near the area in which they will be placed in use, to avoid moving the product unnecessarily once assembled.
- ⚠ Ensure a secure surface during installation, and always place the product on a flat, steady and stable surface.

⚠ WARNING:

Adult assembly required.
the toy is to be assembled by an adult

EXPLODED DRAWING

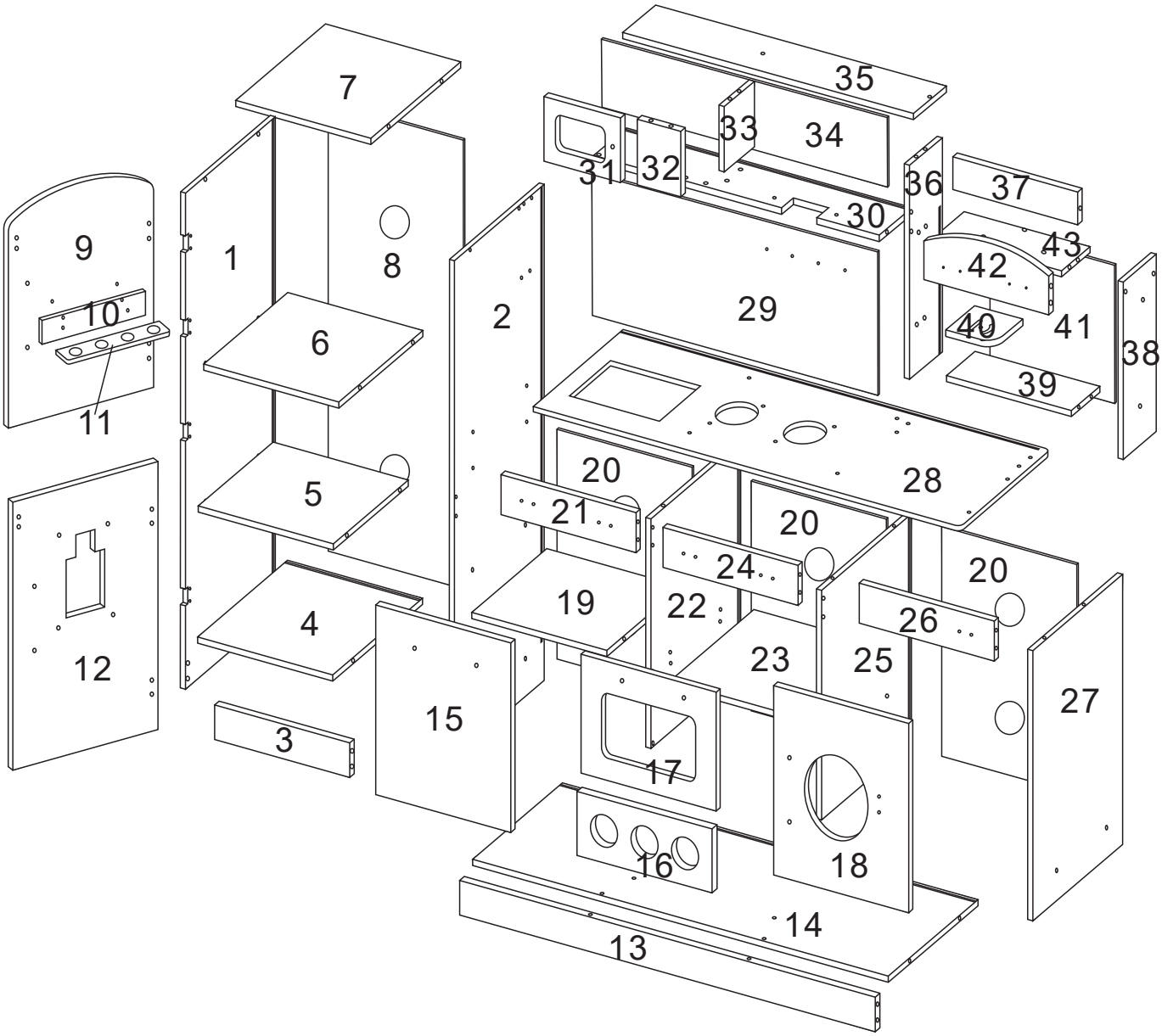

Part List

 1: 1pc	 2: 1pc	 3: 1pc	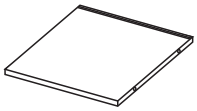 4: 1pc	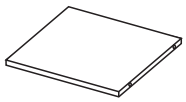 5: 1pc	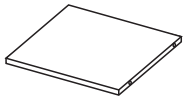 6: 1pc
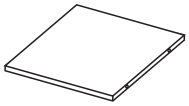 7: 1pc	 8: 1pc	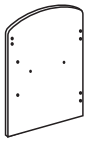 9: 1pc	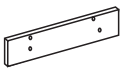 10: 1pc	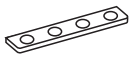 11: 1pc	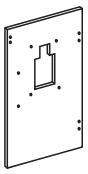 12: 1pc
 13: 1pc	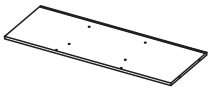 14: 1pc	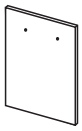 15: 1pc	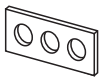 16: 1pc	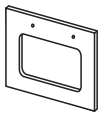 17: 1pc	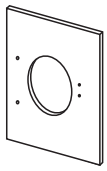 18: 1pc
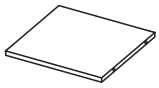 19: 1pc	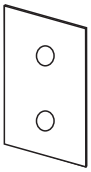 20: 3pcs	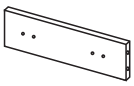 21: 1pc	 22: 1pc	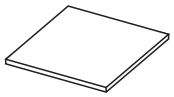 23: 1pc	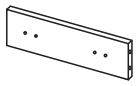 24: 1pc
 25: 1pc	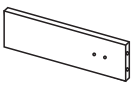 26: 1pc	 27: 1pc	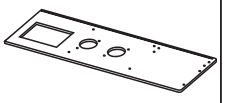 28: 1pc	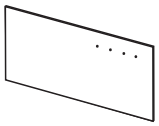 29: 1pc	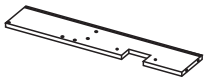 30: 1pc
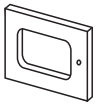 31: 1pc	 32: 1pc	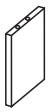 33: 1pc	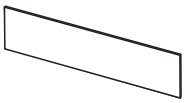 34: 1pc	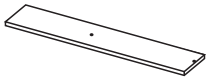 35: 1pc	 36: 1pc
 37: 1pc	 38: 1pc	 39: 1pc	 40: 1pc	41: 1pc	42: 1pc
43: 1pc					

∅4x35mm A: 63pcs +6(spare)	∅3x8mm B: 16pcs +1(spare)	∅3x16mm C: 8pcs	∅5x30mm D: 38pcs +4(spare)	∅4x16mm E: 44pcs +4(spare)	∅3x10mm F: 51pcs +5(spare)	G: 4pcs	H: 5pcs	I: 7pcs
J: 7pcs	K: 10pcs	L: 4pcs	M: 7pcs	N: 2pcs	O: 6pcs	∅4x8mm P: 4pcs	Q: 3pc	∅4x12mm R: 2pcs
S: 4pc	T: 1pc	U: 1pc	V: 1pc					

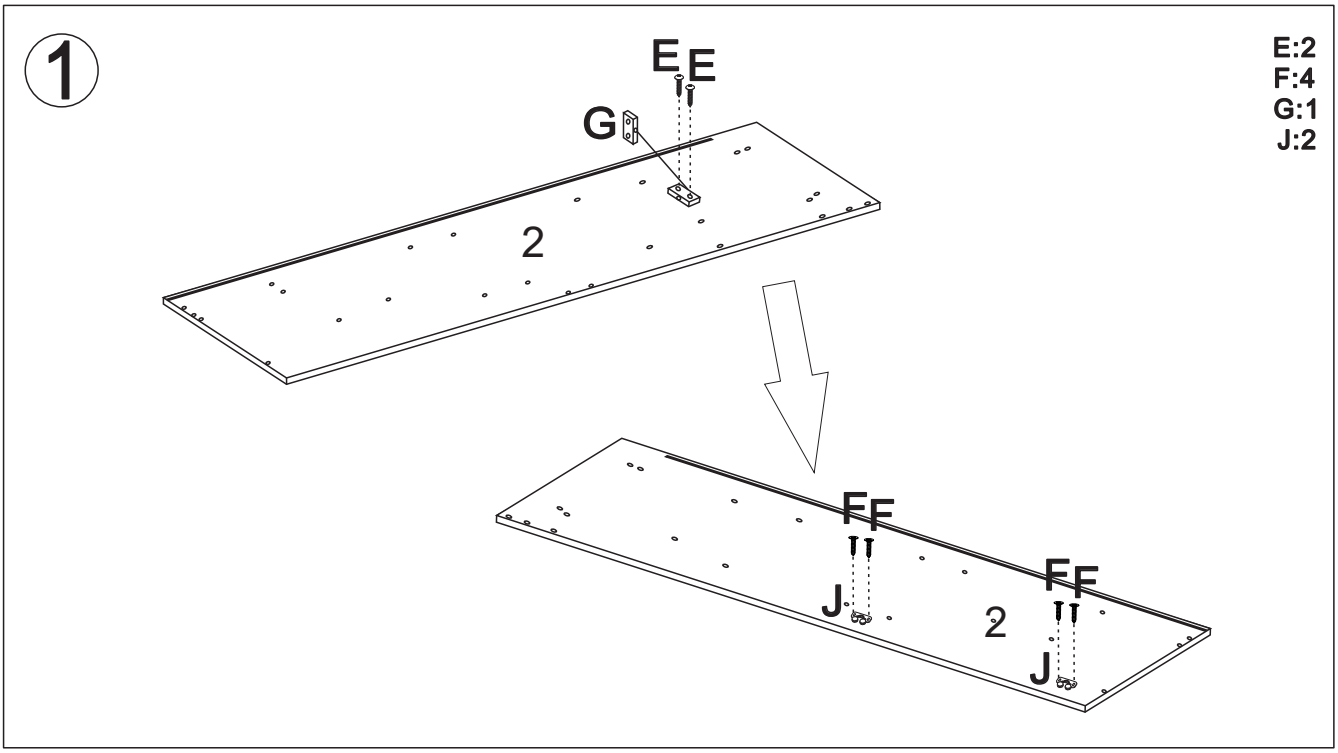

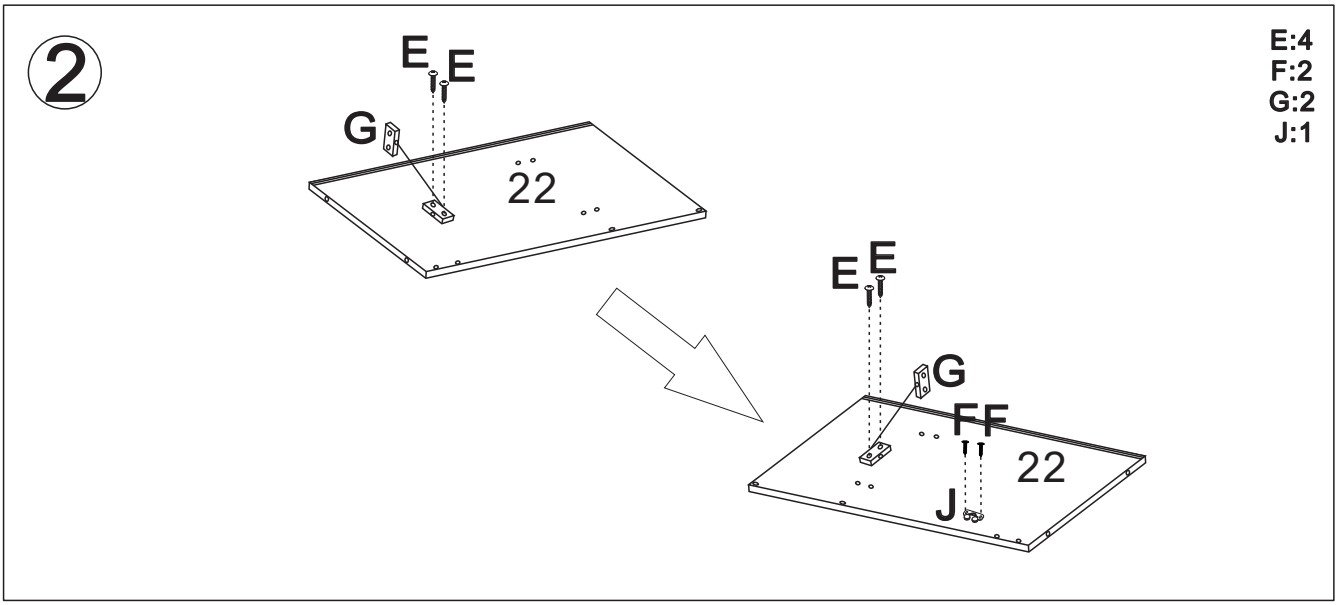

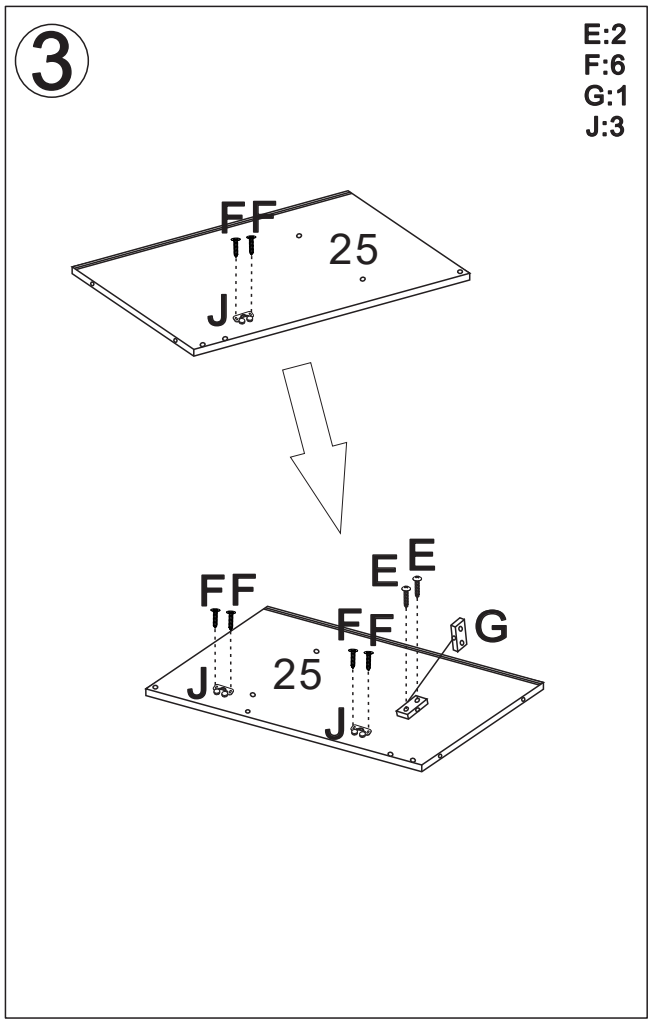
3
E:2
F:6
G:1
J:3
F F
25
J
E E
F F
G
F F
J
25
J

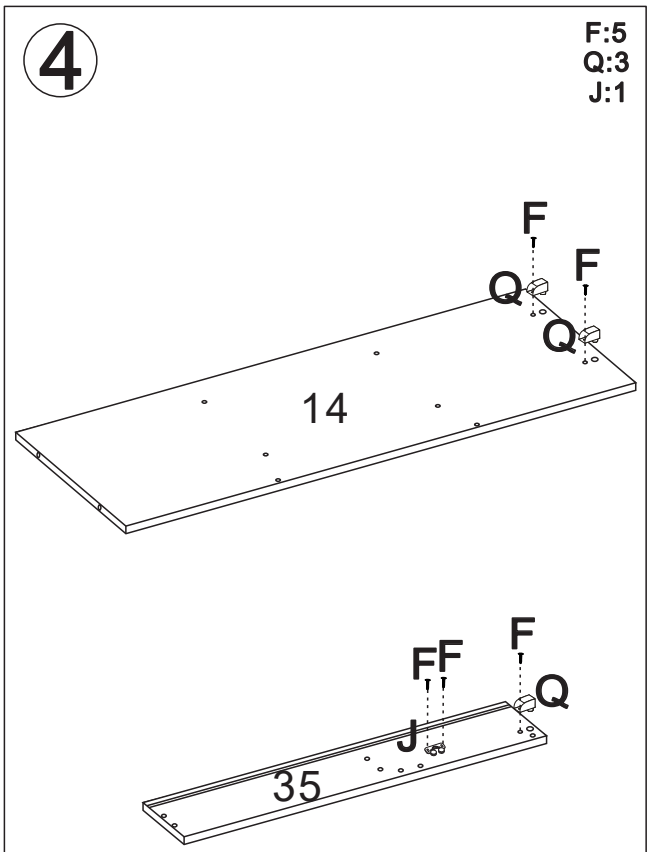
4
F:5
Q:3
J:1
F
Q
F
Q
14
F
F F
Q
J
35

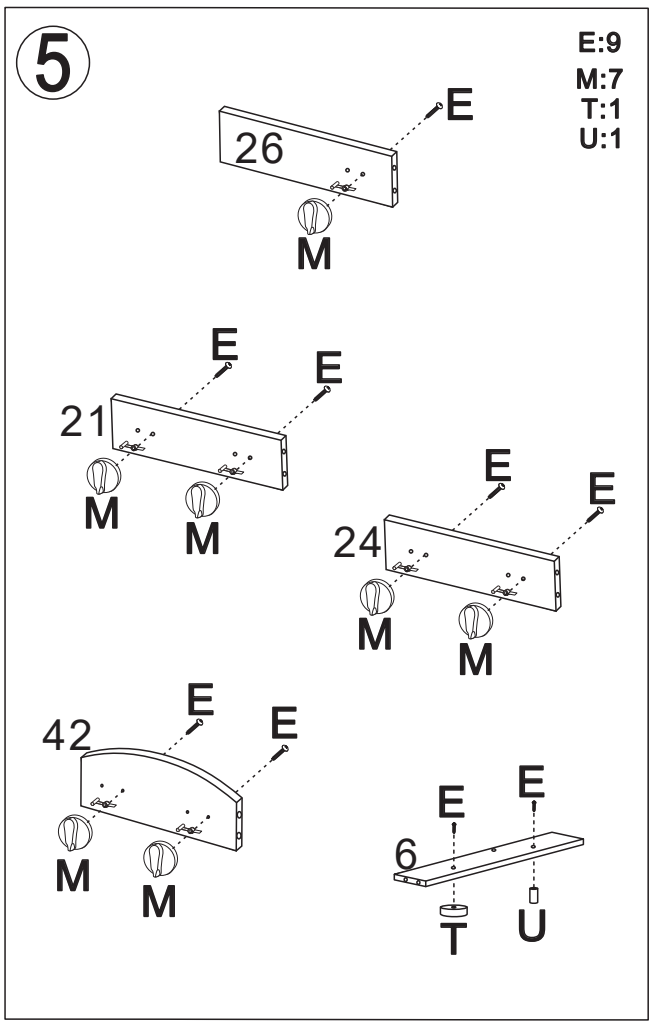
5
E:9
M:7
T:1
U:1
E
26
M
E
E
21
M
M
E
E
24
M
M
E
E
42
M
M
E
E
6
T
U

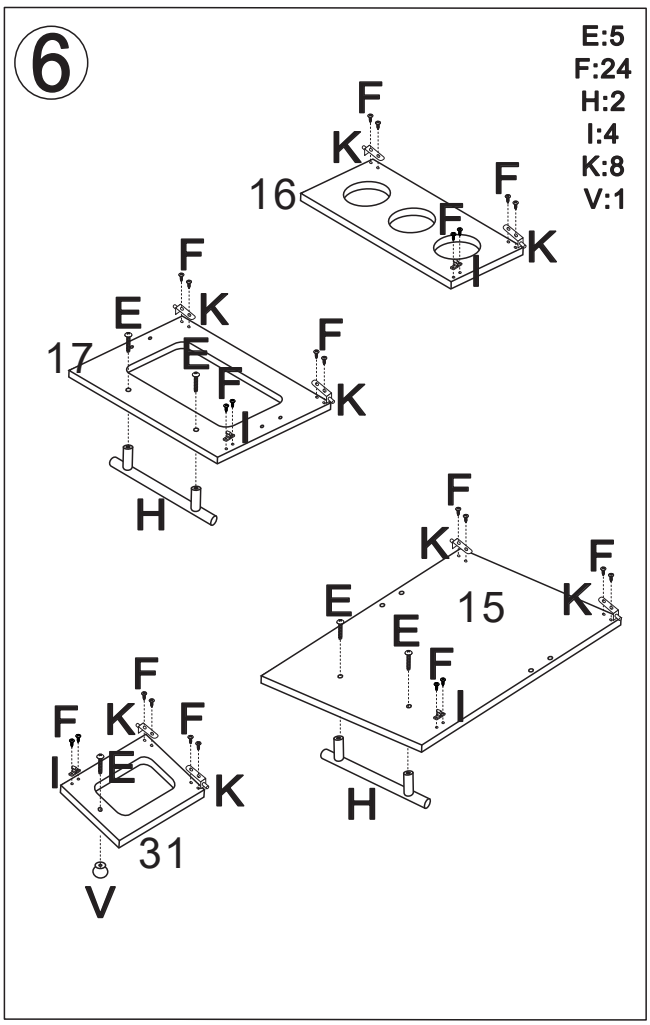
6
E:5
F:24
H:2
I:4
K:8
V:1
F
K
16
F
F
K
I
F
E
K
17
E
F
F
K
I
H
F
K
F
E
15
K
E
E
F
I
H
F
F
K
F
I
E
K
31
V

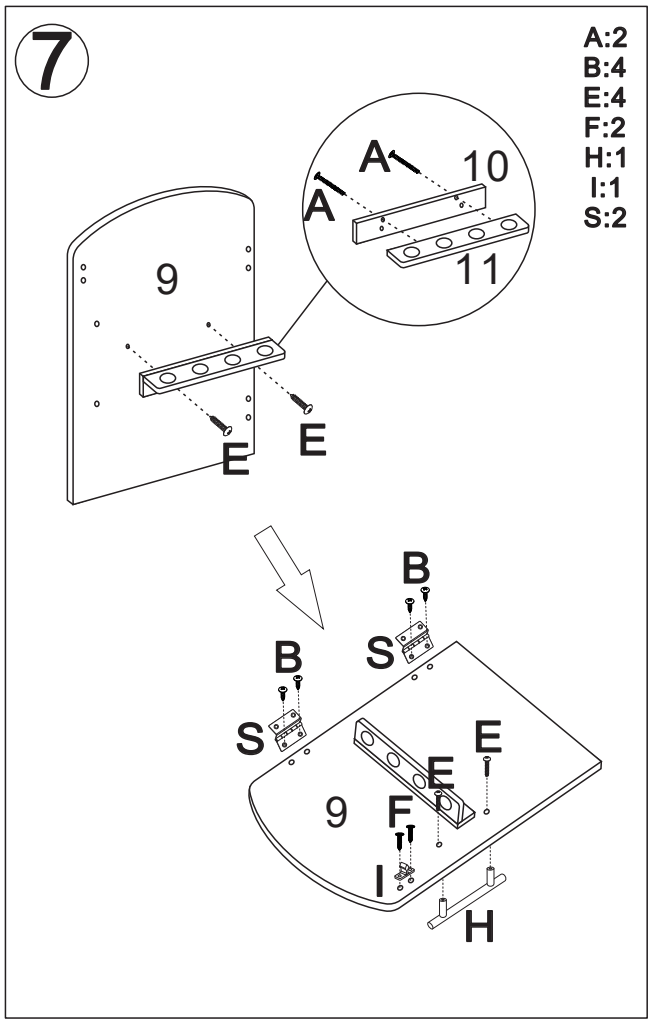
7
A:2
B:4
E:4
F:2
H:1
I:1
S:2
A
A
10
11
9
E
E
B
S
B
S
E
E
9
F
I
H

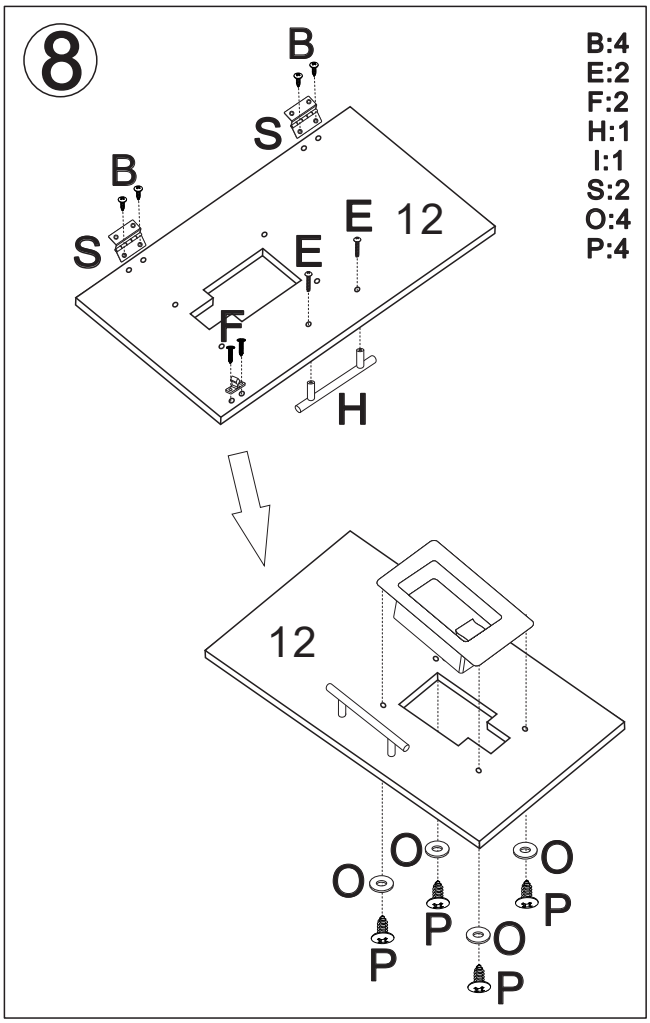
8
B:4
E:2
F:2
H:1
I:1
S:2
O:4
P:4
B
S
B
S
E
12
E
F
H
12
O
O
O
O
P
P
P
O
P

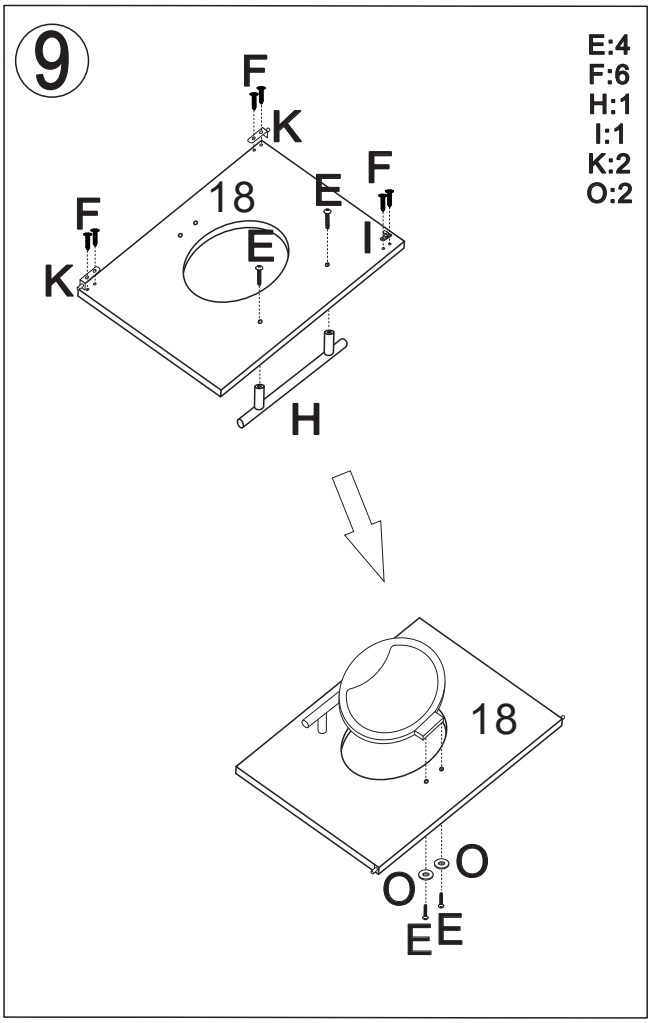
9
E:4
F:6
H:1
I:1
K:2
O:2
F
K
18
E
F
F
K
E
I
H
18
O
O
E
E

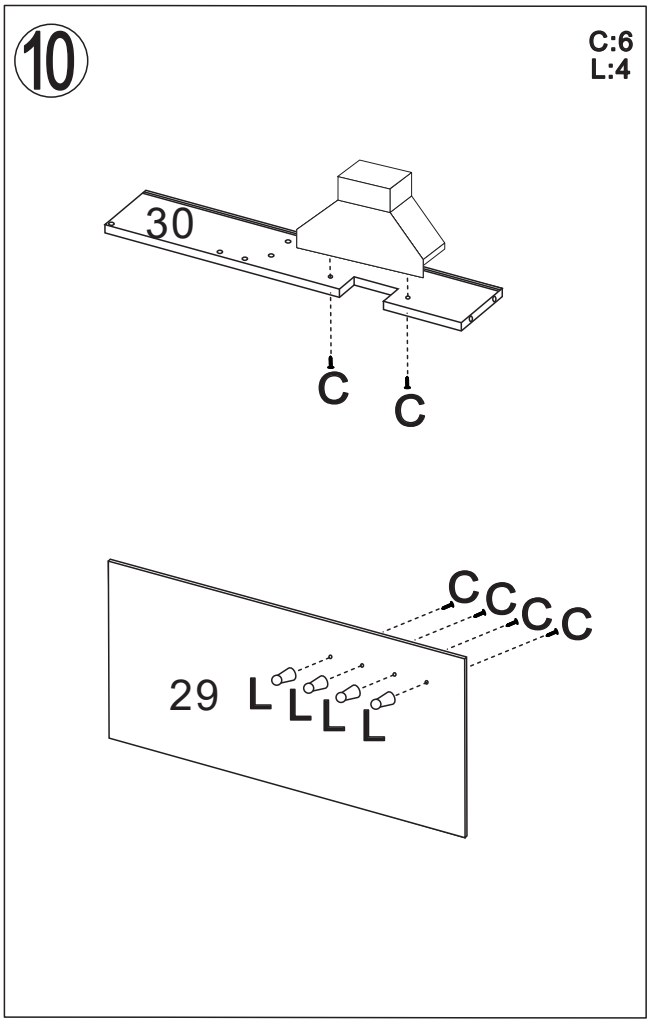
10
C:6
L:4
30
C
C
C
C
C
C
29
L
L
L
L

11

C:2
E:4
N:2

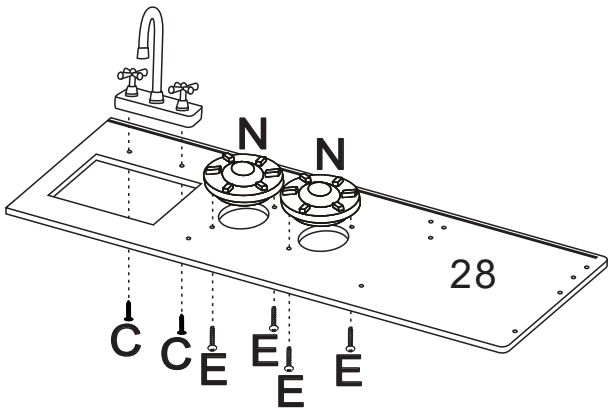

12

A:6

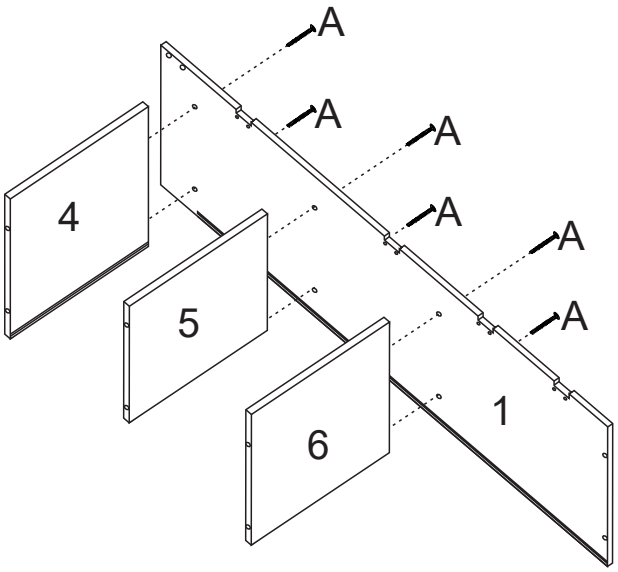

13

A:6
D:4

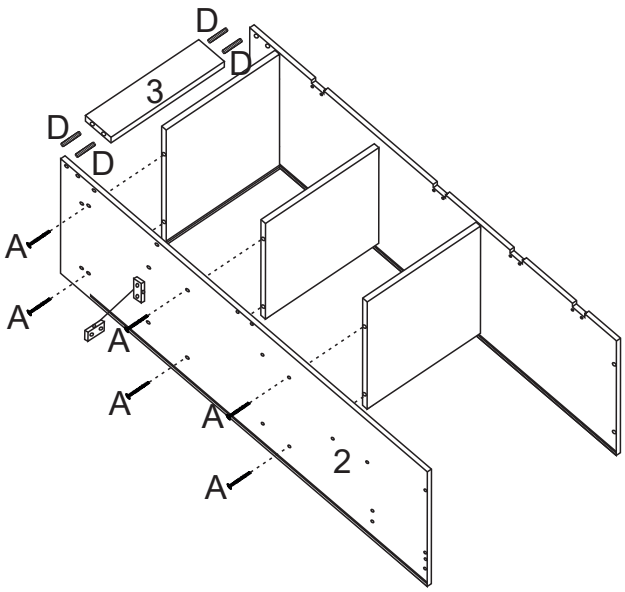

14

A:2

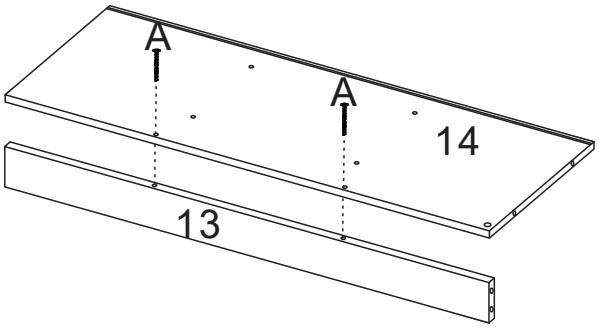

15

A:2
D:2

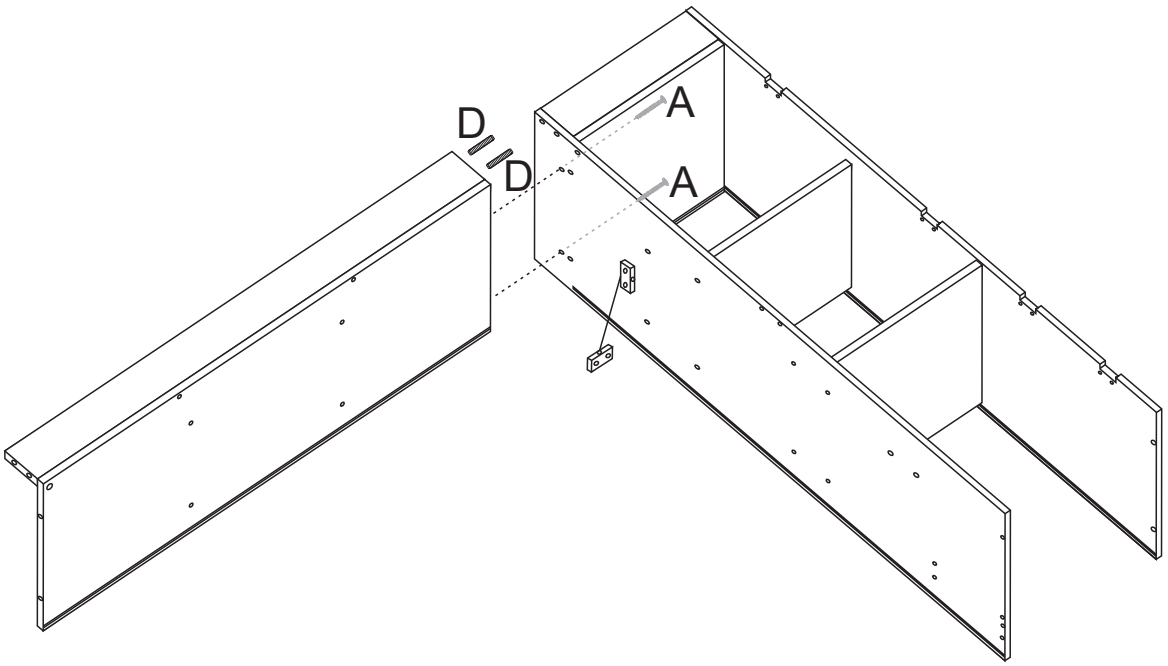

16

A:2

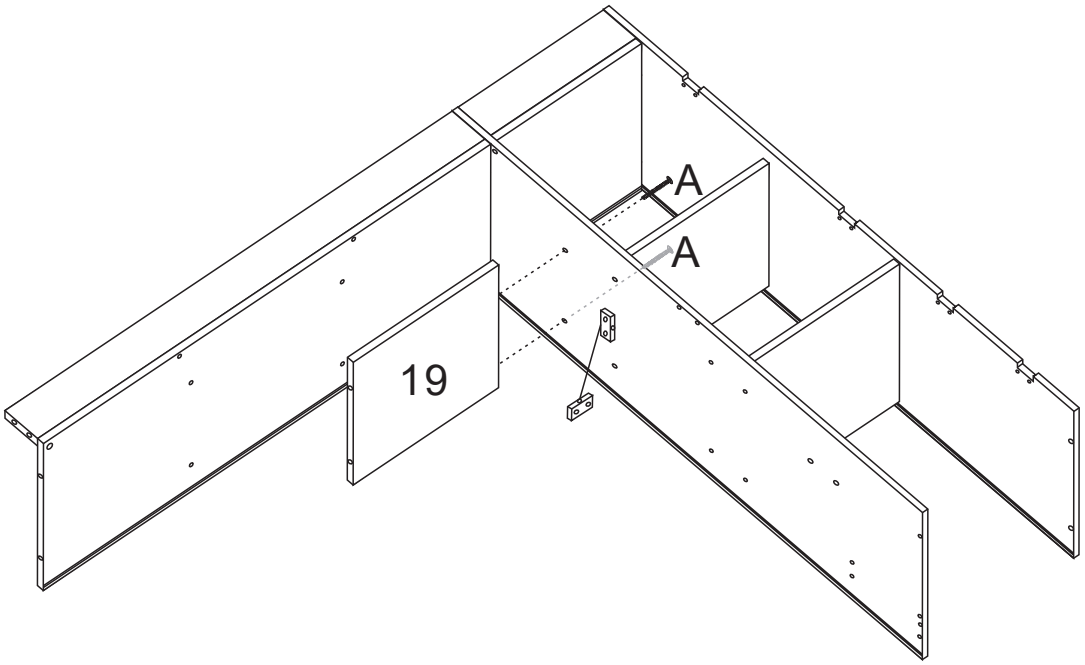

17

A:4
D:4

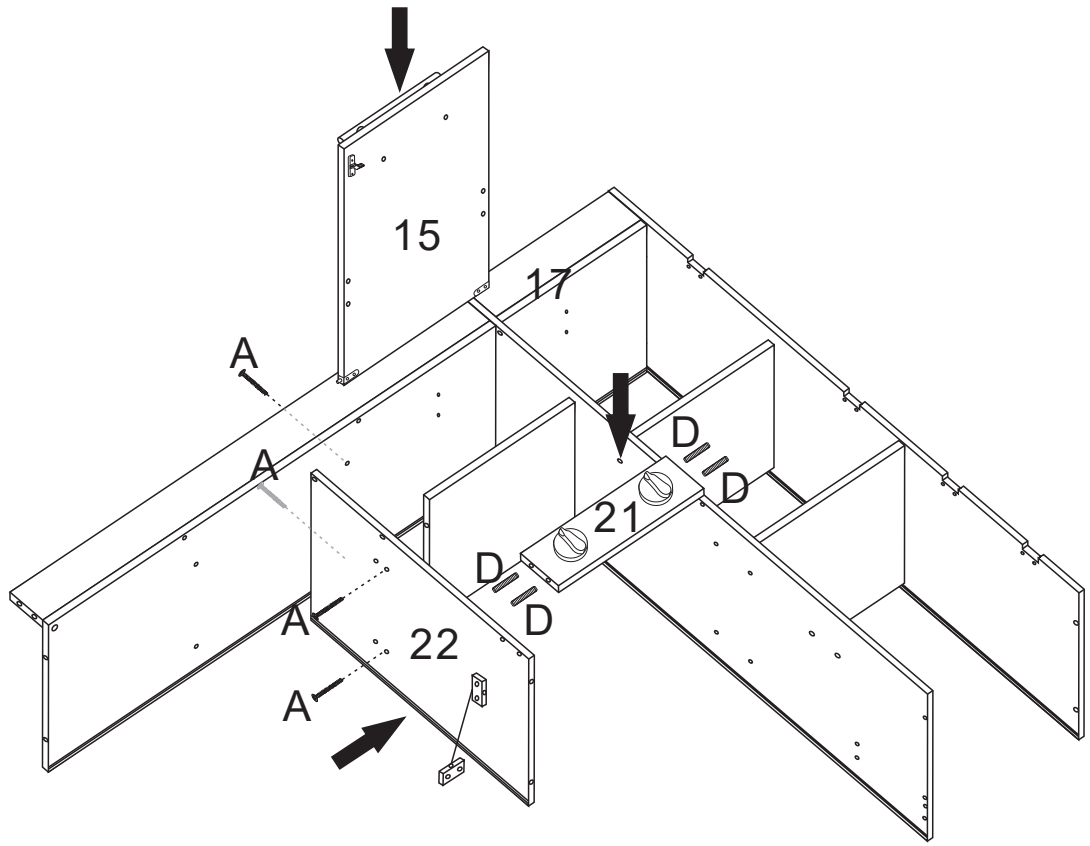

18

E:4

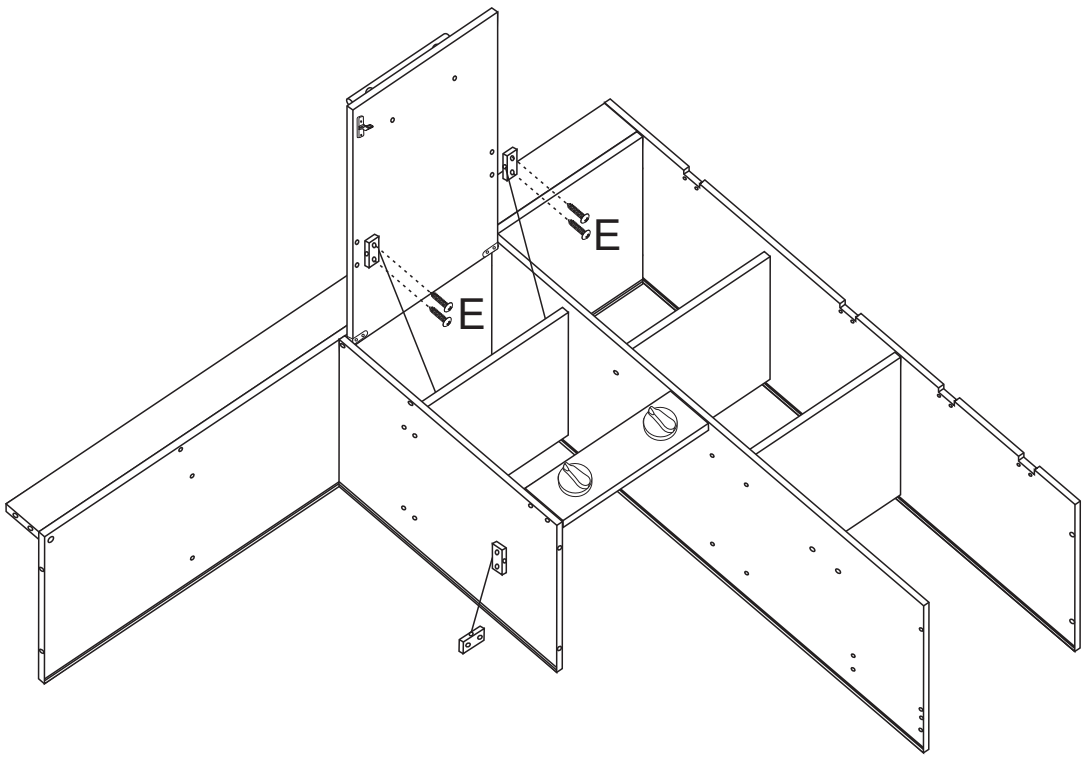

19

A:2

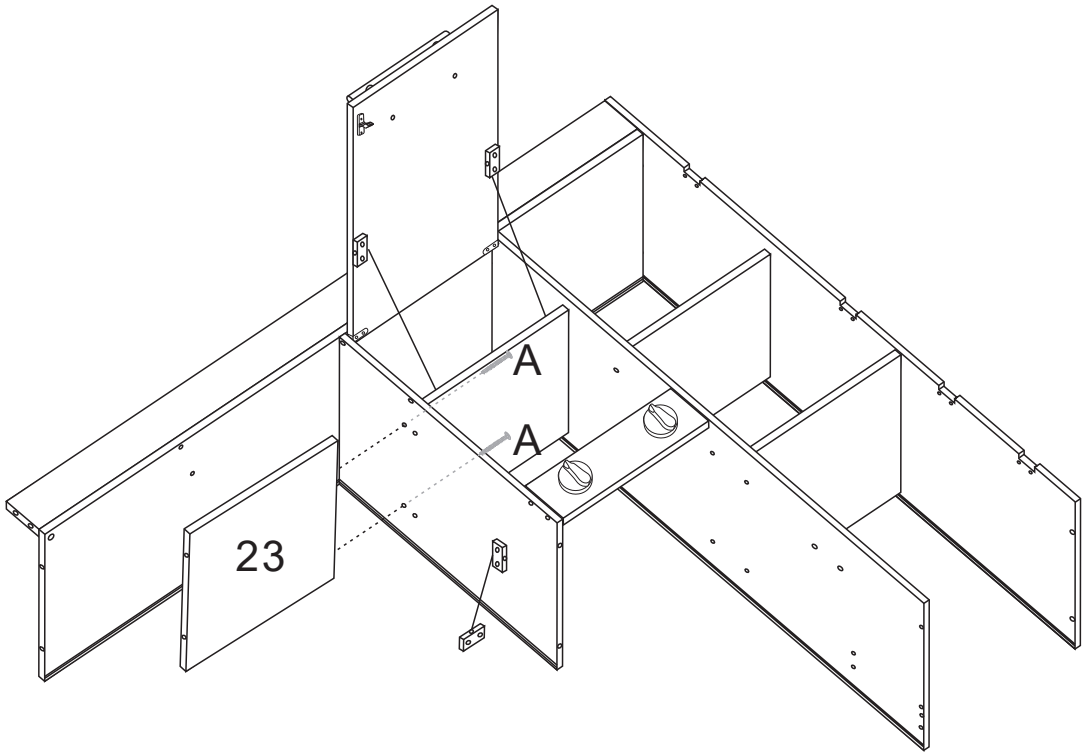

20

A:4
D:4

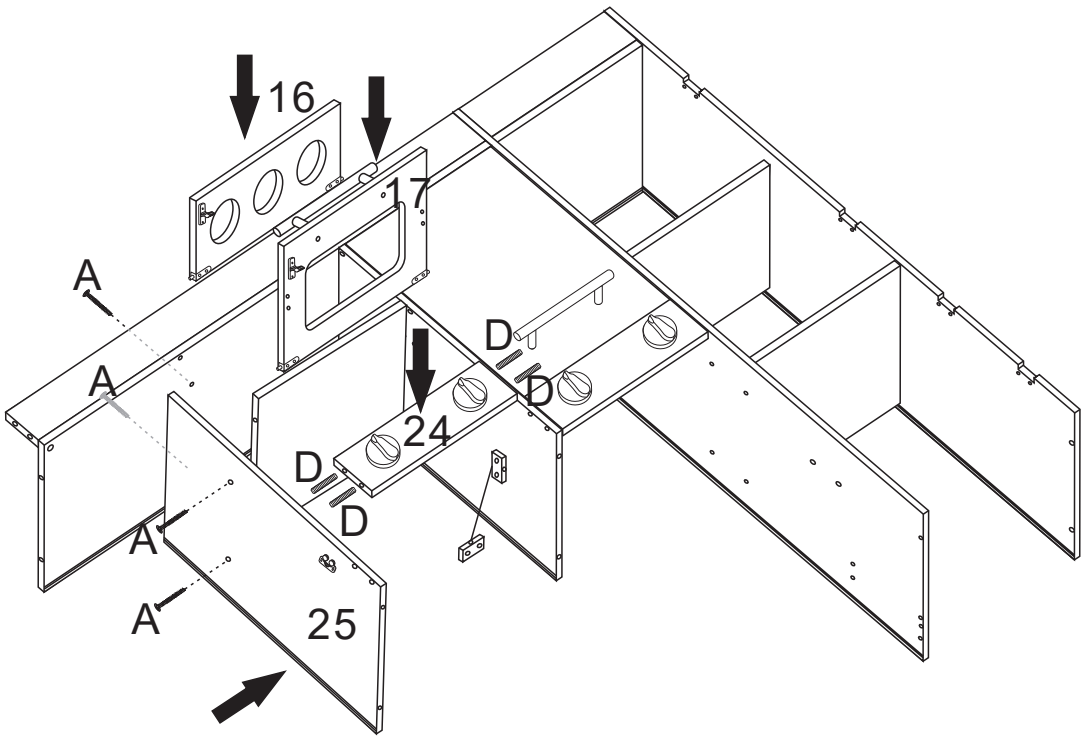

21

E:4

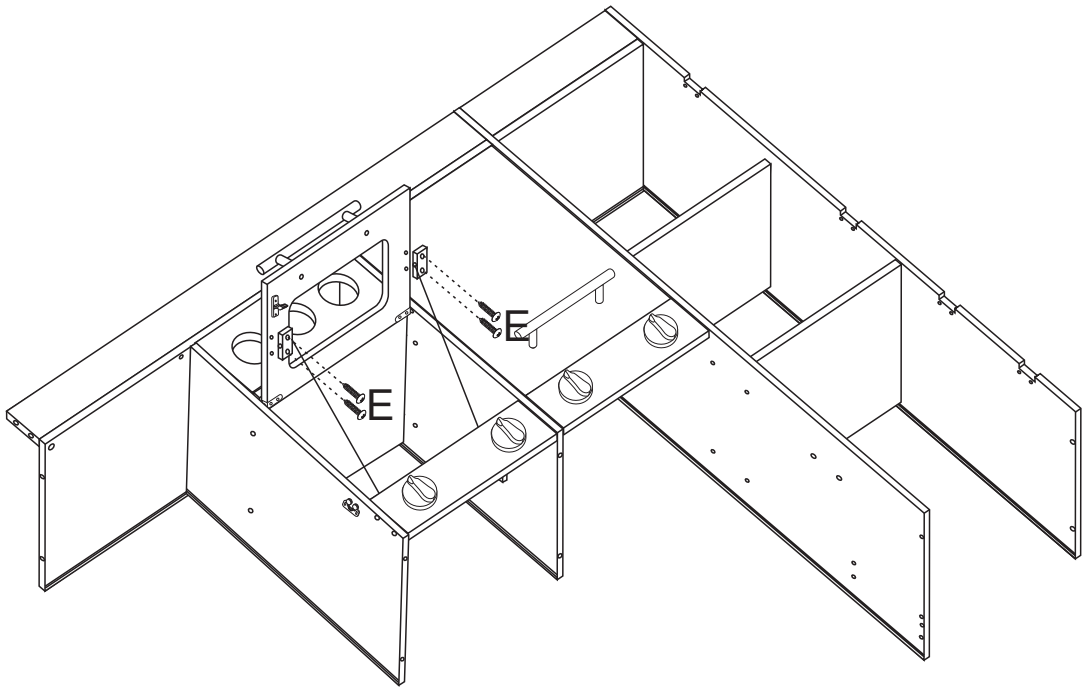

22

A:2
D:2

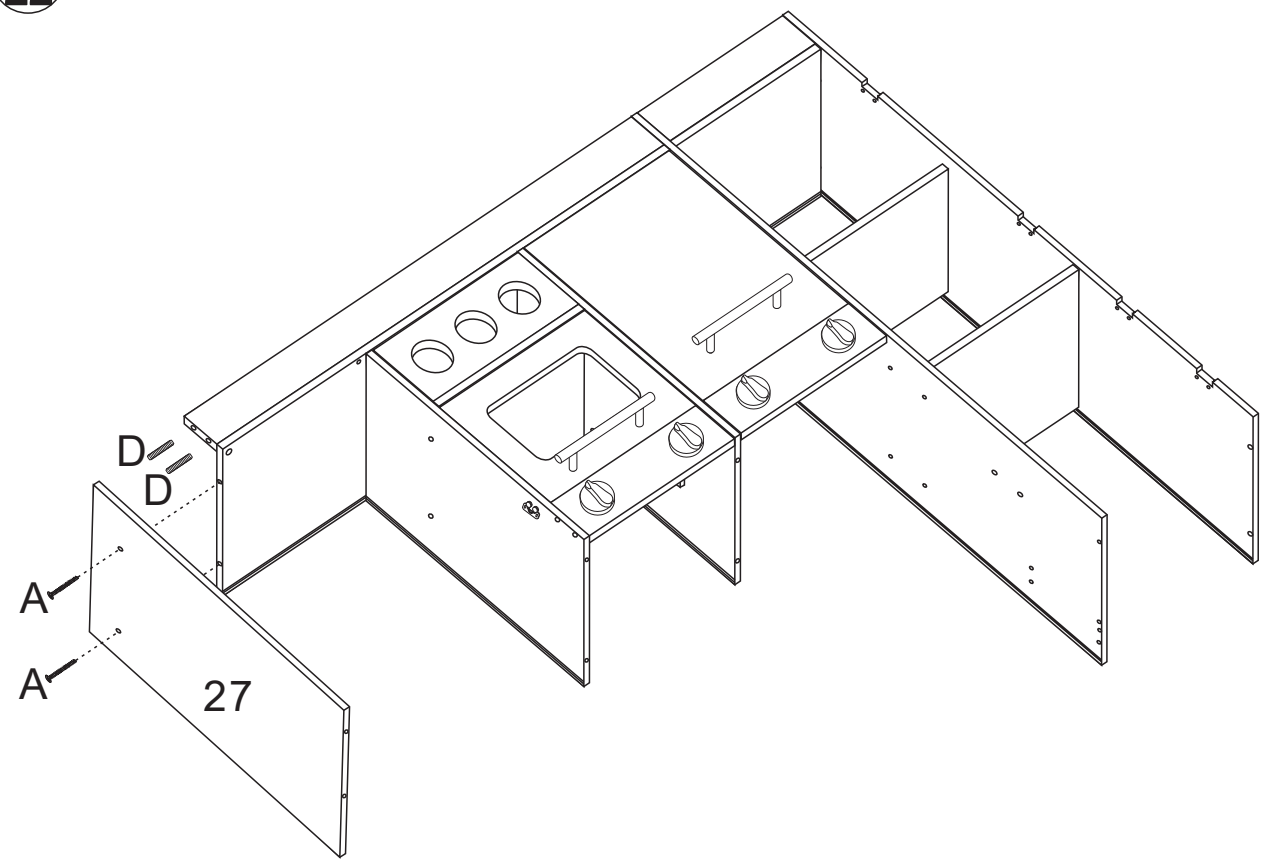

23

D:4

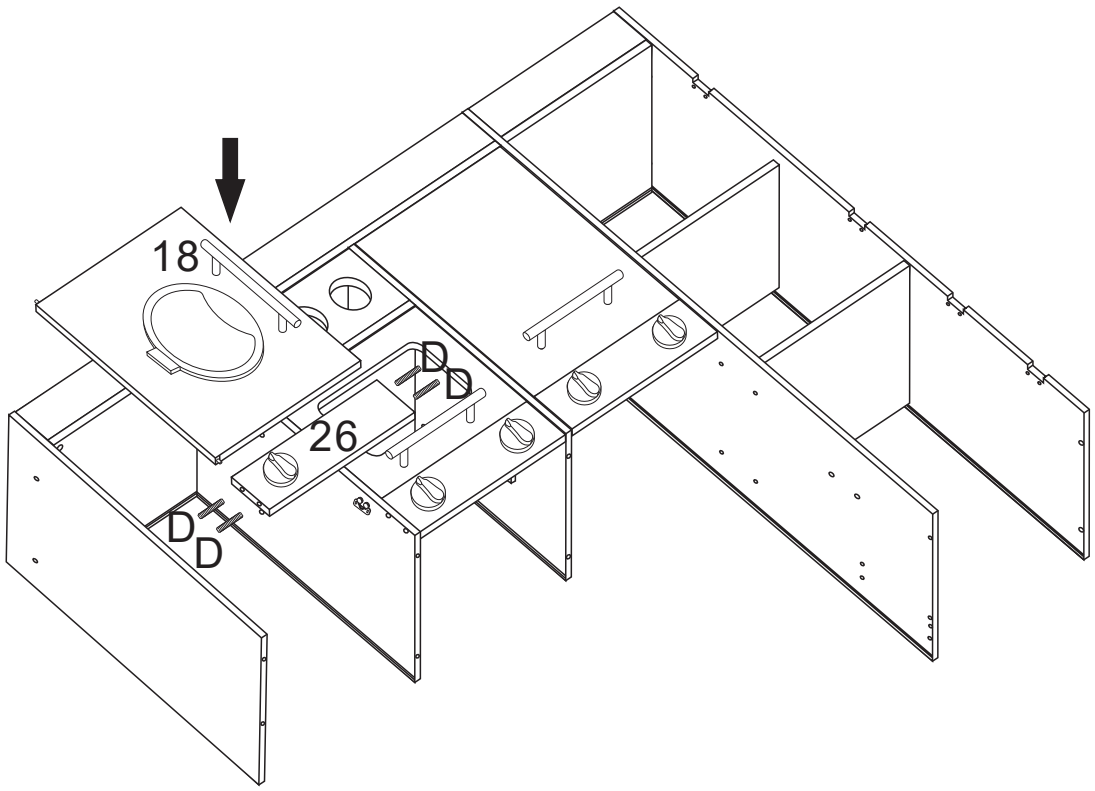

24

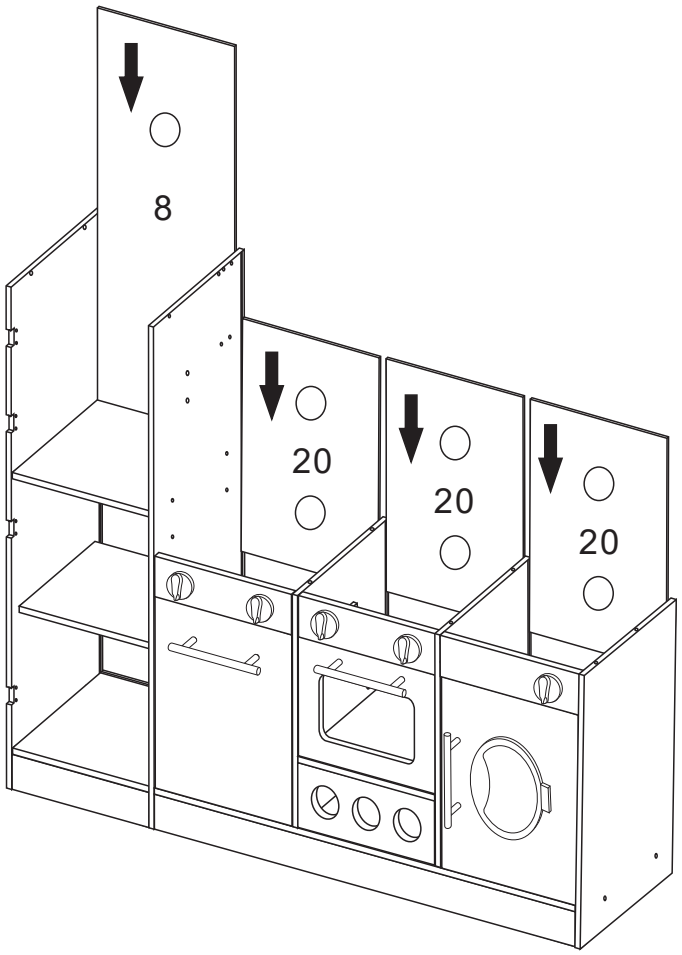

25

A:8
D:6

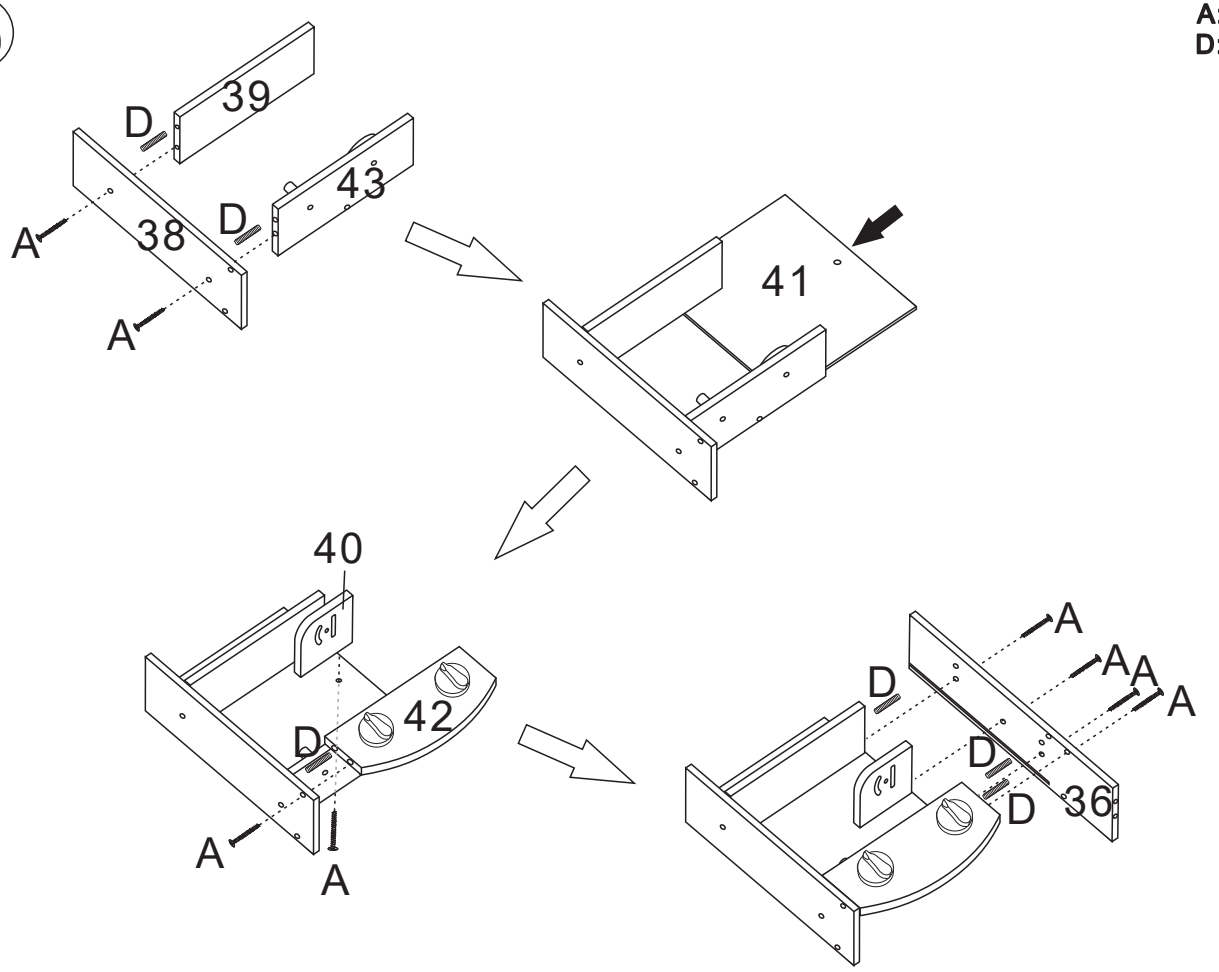

26

A:2
D:2

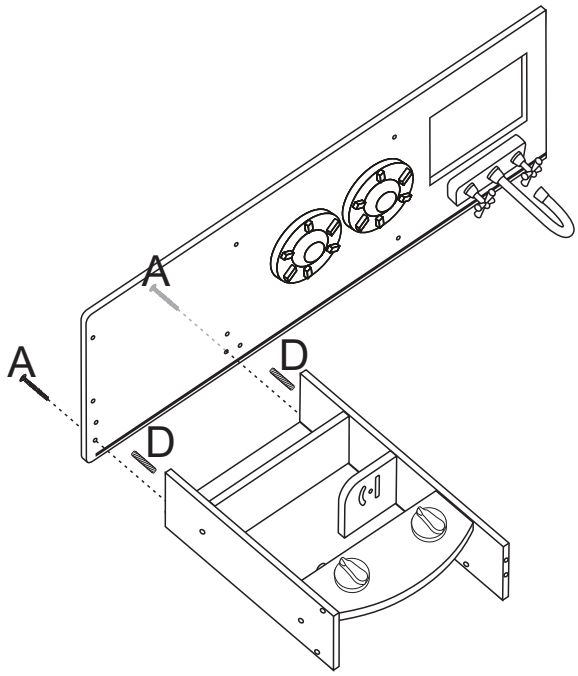

27

A:8

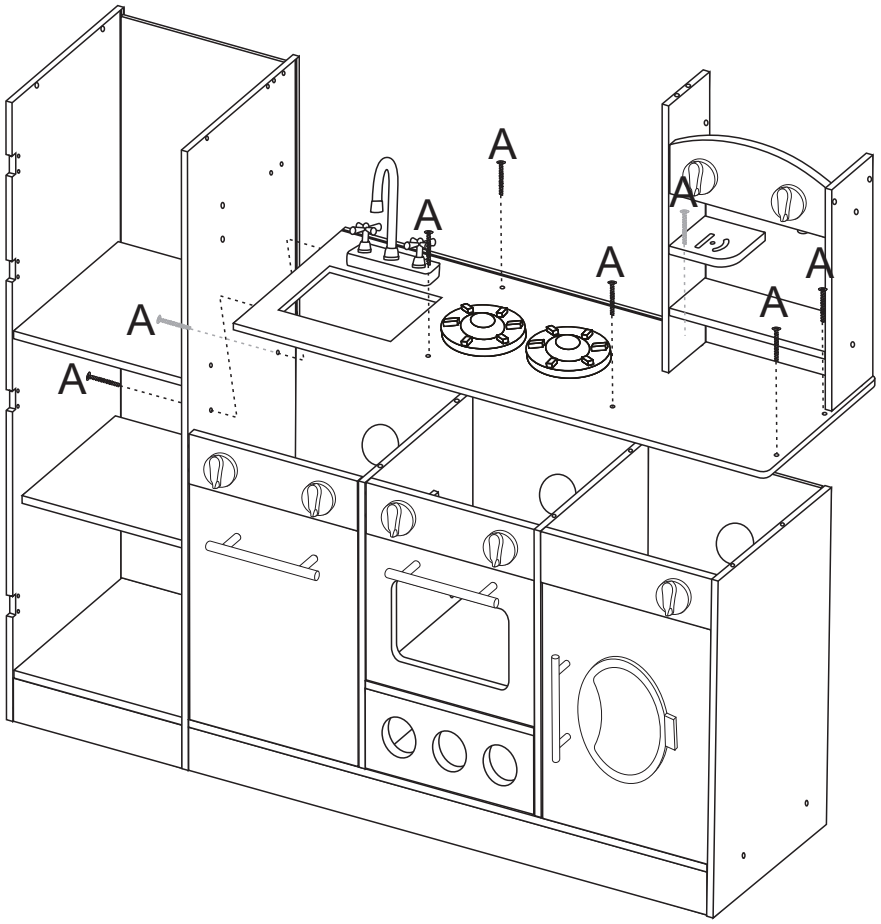

28

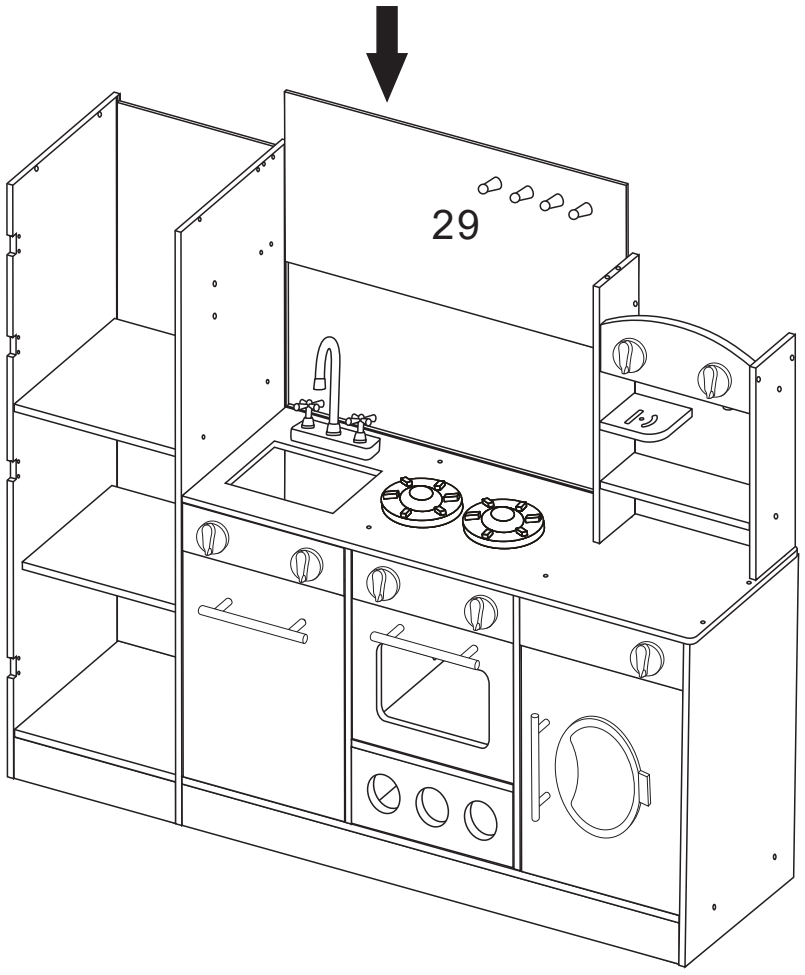

29

A:5
D:2

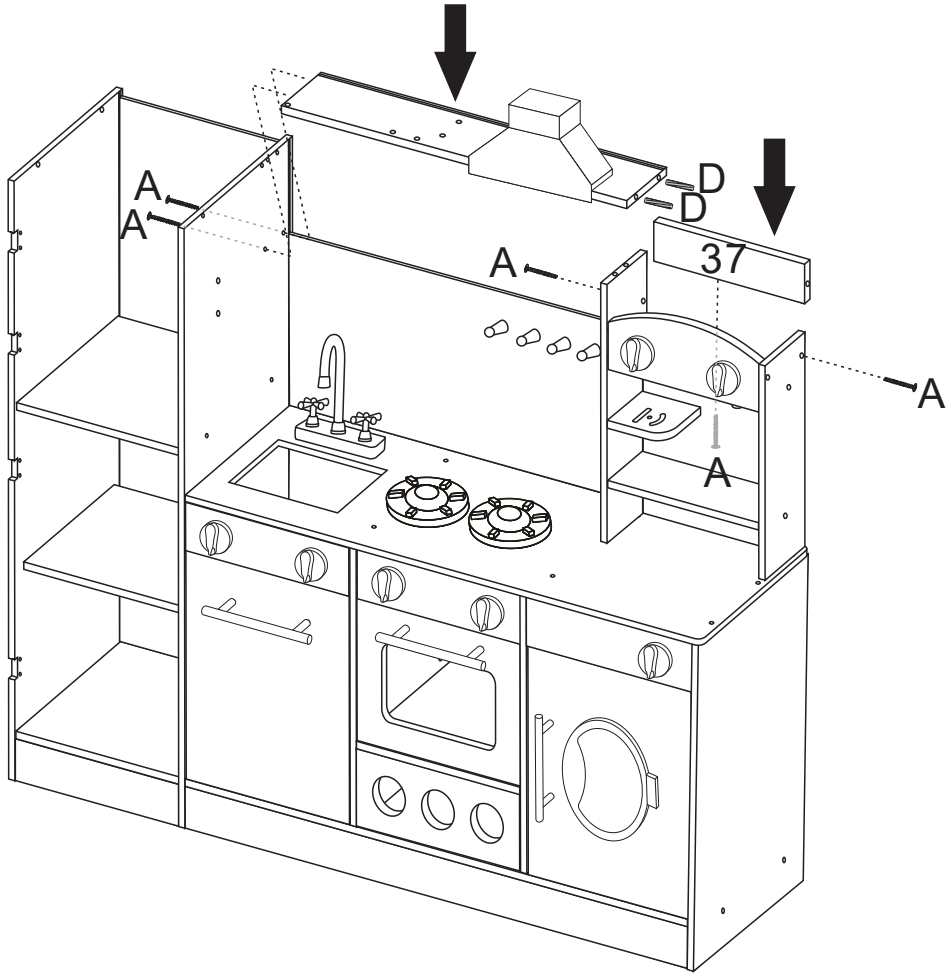

30

A:1
D:1

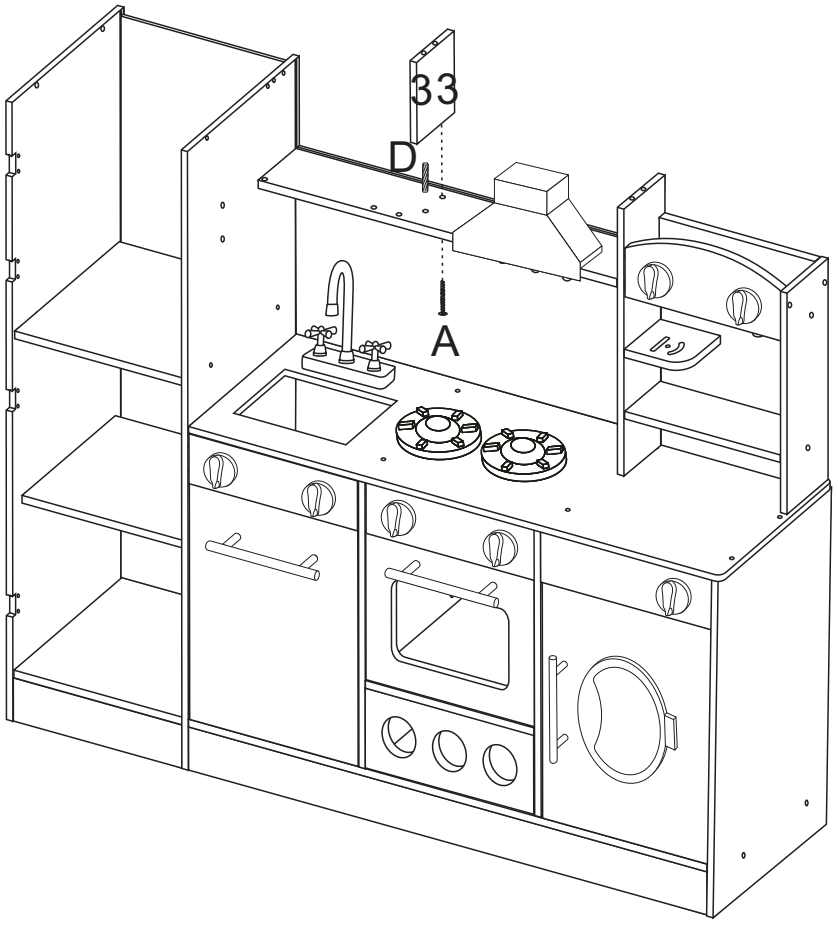

31

A:4

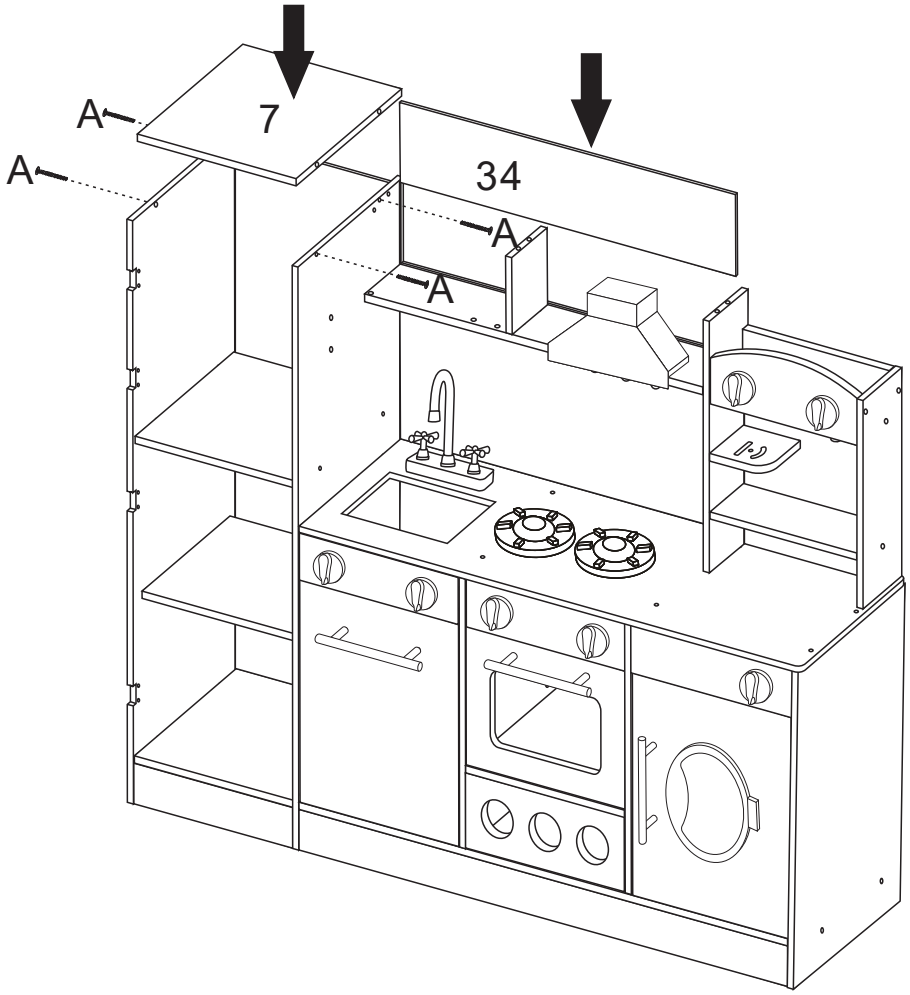

32

D:4

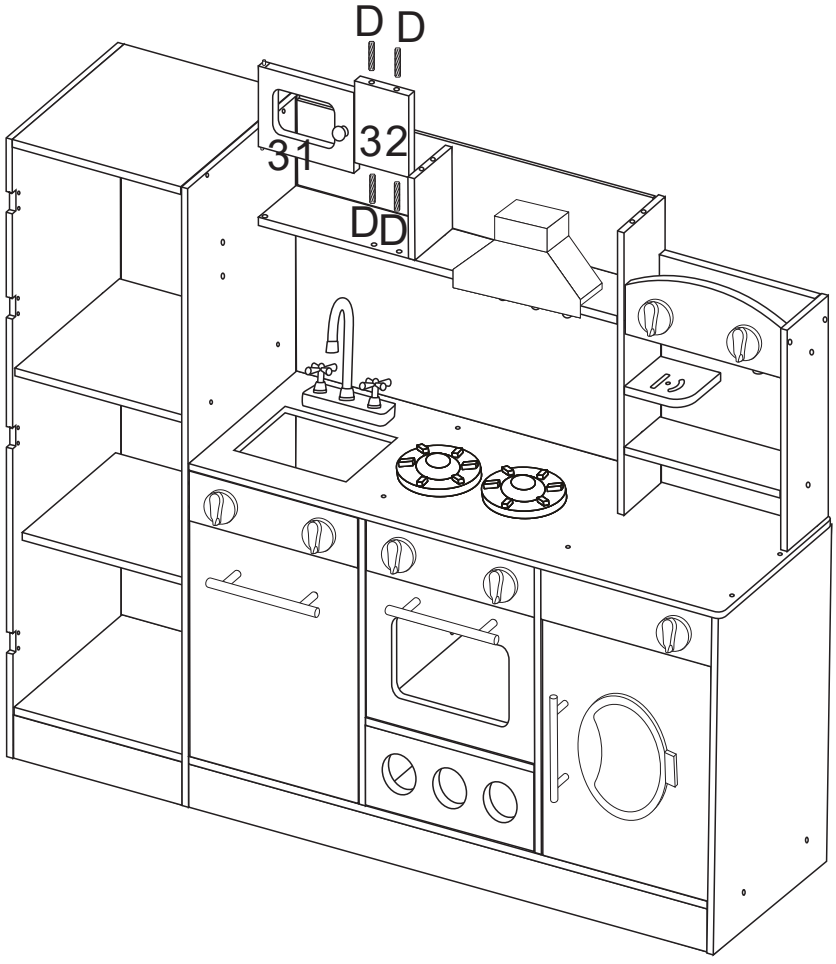

33

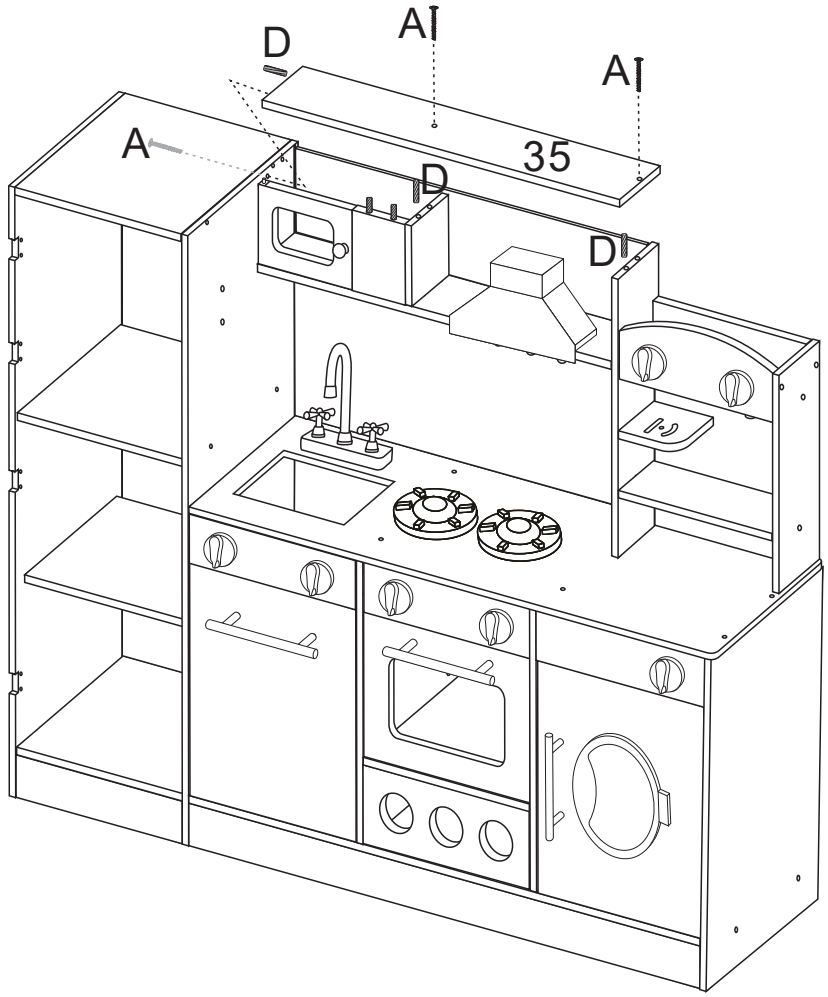

A:3
D:3

34

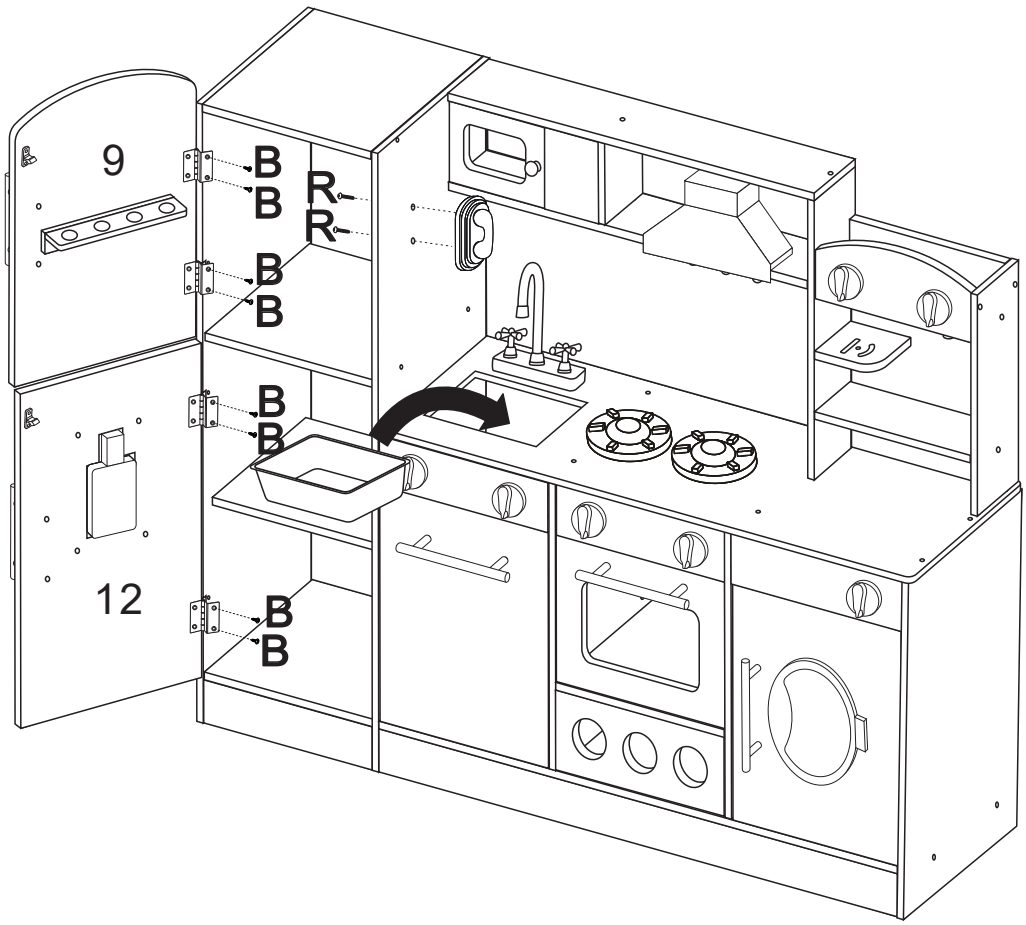

B:8
R:2

35

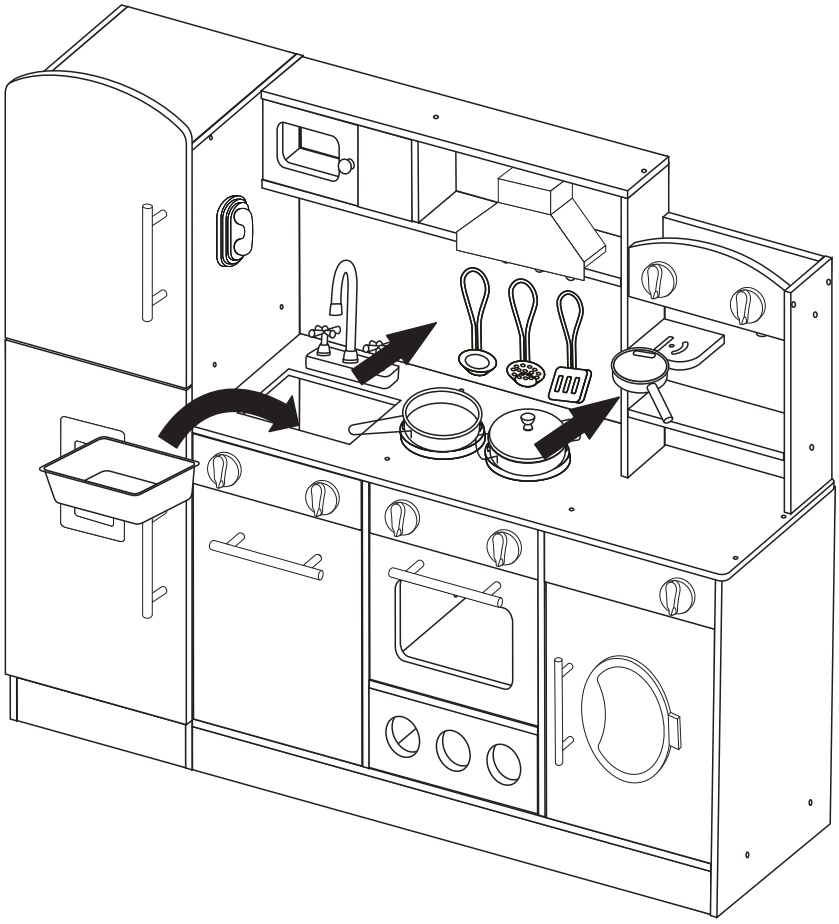

36

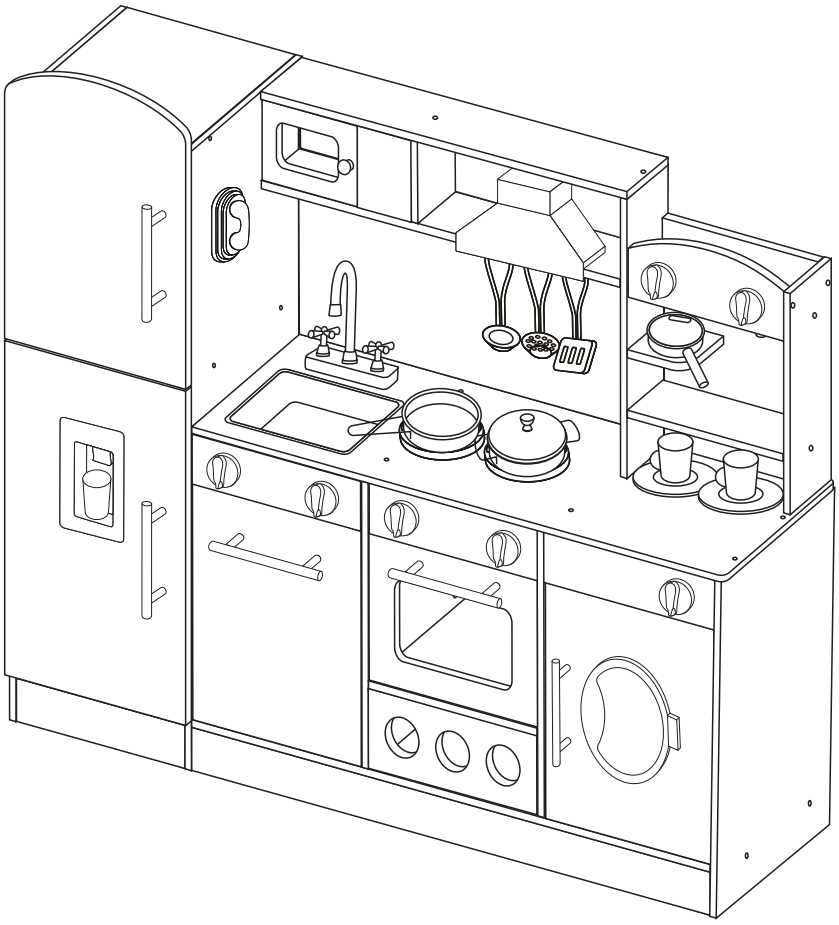

AFTER-SALE SERVICE

If you have any suggestions for our products or find that the products have quality problems, please contact us first, our after-sales team will reply you within 24 hours, and we will do our best to give you solutions until you are satisfied.

Guaranteed Customer Service

Your shopping experience is very important to us!
Feel unsatisfied? **Contact us!**
Have any questions? **Contact us!**

Wanna share your experience with our products?
Share your pictures with us.

Any suggestions? **Contact us!**
We gotcha back!



E-mail: service@replycenter.net