ASSEMBLY INSTRUCTION

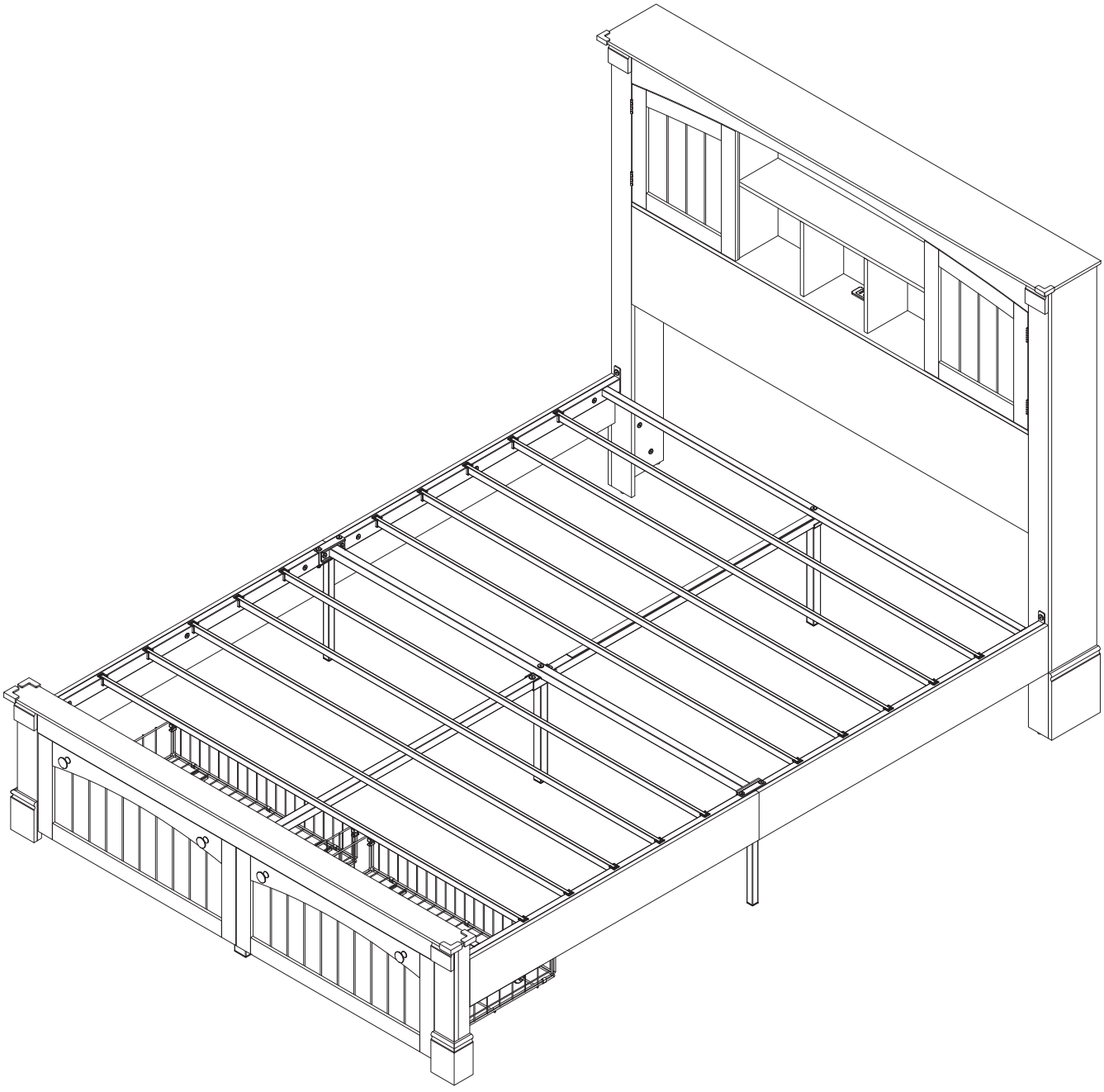

Disclaimer

To Valued Customers:

Thank you for purchasing furniture products from our store. To ensure your safety and the best user experience, please read and understand all the contents of this notice carefully before installation and use. Once you start installing or using this product, it is deemed that you have accepted all the following terms.

I. Regarding Installation

●**Professional Installation Recommendation:** For large, modular, or wall-mounted furniture, we strongly recommend that you hire qualified professionals for installation. Self-installation may involve risks.

●**Self-Installation Liability:** If you choose to install the product yourself, it means that you confirm you have the corresponding installation capability and voluntarily assume all risks and responsibilities arising from improper installation, including personal injury and property damage. Improper installation includes, but is not limited to, damage to product components due to ignoring installation instructions during the installation process, loose, missing, or wrong installation of connectors, and obvious instability such as tilting and shaking due to improper placement after installation.

●**Follow Official Instructions:** Installation must strictly follow the steps in the Installation Manual and diagrams provided with the product. Do not rely on any installation guidance from unofficial channels. Our company shall not be responsible for any problems caused by failure to follow official instructions.

●Safe Installation Environment: Please carry out the installation in a spacious, bright, and well-ventilated environment and use appropriate tools. During installation, please keep children and pets away from the work area to prevent accidental ingestion of small parts or accidental injuries.

II. Regarding Usage

●**Weight Capacity Limit:** Please strictly comply with the maximum weight capacity limit indicated on the product. Overloading may cause structural damage, deformation, or overturning of the furniture, leading to serious accidents. Our company shall not be responsible for any consequences arising therefrom.

●**Regular Inspection and Maintenance:** It is recommended that you regularly (especially in the early stage of installation and after moving) inspect and tighten all connectors (screws, bolts, etc.) to ensure the structural stability of the furniture (see the maintenance method in the manual for details). Problems caused by neglect of inspection and maintenance are not covered by the warranty.

●**Proper Use and Placement:**

Place the furniture on a flat and solid floor.

Do not use the furniture for purposes other than its designed use (for example, standing on drawers or shelves, using a chair as a ladder, etc.).

Do not place heavy objects such as televisions or items that attract children on the upper part of the furniture.

Avoid placing the furniture in humid, sun-exposed, or extreme temperature environments to avoid affecting the product's service life or structural stability.

III. Liability Limitation

Our company provides warranty services for product quality in compliance with platform policies and relevant regulations. However, our company shall not be legally responsible for any direct or indirect personal injury, property damage, and other incidental losses caused by the following reasons:

Failure to comply with the requirements of this notice, the official Installation Manual , or product labels;

Misuse, abuse, negligence, or unauthorized repair or modification without our company's authorization;

Improper installation (whether carried out by the user or a third party not designated by our company);

Force majeure events.

Safety first, prevention is better than cure. We wish you a pleasant use!

Electrical Safety Precautions

- **Do not** use damaged power plugs or loose power sockets.
- **Do not** move the product by pulling the power cord.
- **Do not** forcibly bend the power cord or place it under heavy ob–jects.
- If the power socket is wet, carefully unplug the product’s power plug.
- **Do not** touch the power plug with wet hands.
- Unplug the product’s power plug before maintenance.
- For electrical products not in use for an extended period, ensure the power supply is disconnected.

Children should use this product only with adult supervision.

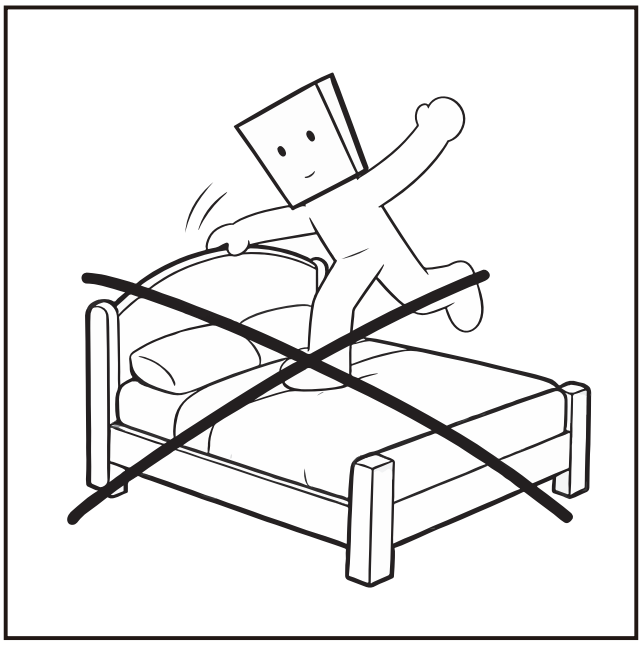

DO NOT SHAKE OR CLIMB ON THE HEADBOARD

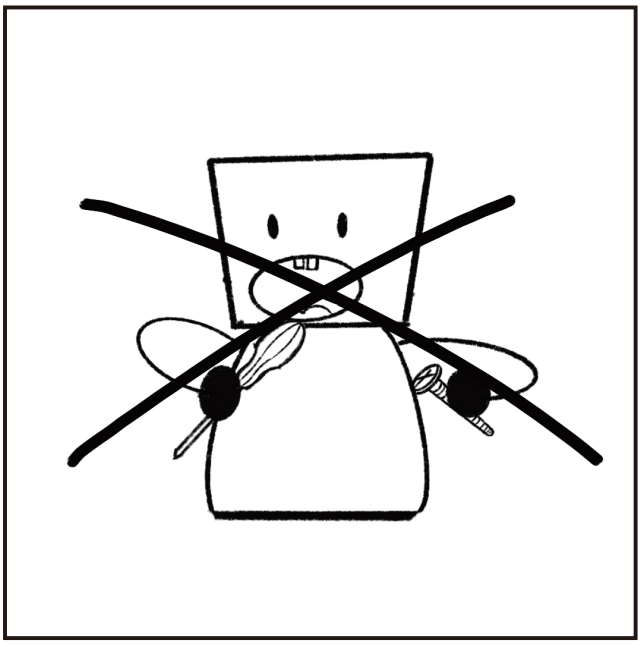

DO NOT PLAY WITH OR SWALLOW SMALL PARTS

Weight Capacity:

–**Do not** place items exceeding the maximum weight capacity of the product. (For the product's weight capacity, please refer to the product link.)

Usage Scenarios and Maintenance Methods

- **Do not** place the product in a humid environment.
- Avoid direct exposure to high temperatures and keep it away from heat sources.
- Clean and maintain the product regularly.
- Place it on a flat surface. When moving is required, ensure that at least two people lift it together.
- Check the condition of screws regularly. If any screws are loose or fall off, reinforce them promptly.

Wooden products

Preparation before Installation

–Please read the assembly instructions carefully before installation and keep this manual for future reference. Check that all components are complete, including panels, hardware fittings, screws, plastic parts and other small components.
Ensure that **only adults** perform the installation, and keep children away from the installation area.

Notes

- Avoid prolonged exposure of the furniture to direct sunlight or proximity to heating appliances to prevent local discoloration and fading.

- **Do not** allow easily combustible or oxidizable items to come into direct contact with the furniture surface, as this may cause chemical reactions and damage the furniture finish.

- Climbing or playing on the product is prohibited to avoid accidental injury. **Do not** use the product as a support or stand on it for high–altitude operations.

- **Do not** forcefully open or close the furniture doors and drawers. Use appropriate force during operation to prevent loose connections.

- When moving the furniture, remove all items inside the cabinet and secure movable parts such as doors and drawers to prevent the furniture from tilting or parts from falling and causing injury. Never drag or push hard during movement to avoid loose fasteners or broken parts. The product must be lifted off the ground by multiple people simultaneously; ensure safety during handling.

- When children use this product, adult supervision is required to ensure safe use.

- Strictly use anti–tip components as specified in the instruction manual.

- **Do not** slide hard objects directly on the furniture to avoid scratching the surface; prevent hard objects from colliding with the furniture to protect its surface from hard scratches.

- Avoid prolonged contact of panel edges with water or liquids, as this may cause panels to absorb moisture and swell.

- Avoid prolonged exposure to high temperatures, as it may cause surface bulging on vacuum-formed/laminated components.

- **Do not** use any acidic or corrosive cleaners for surface cleaning.

- Secondary drilling is not recommended, as it may damage the internal structural strength.



Maintenance Methods

(1) Regularly remove dust from the furniture surface with a soft cloth or wool brush to prevent dust from scratching the paint finish.

(2) If there are water stains on the product, wipe them dry with a dry cloth immediately. Do not allow moisture to remain on the furniture surface to avoid long-term dampness.

(3) If the environment where the product is placed is humid, it is recommended to place dehumidifying products inside the cabinet.

(4) Place high-temperature or frozen items on the product only after placing a heat-resistant mat underneath. For heavy or hard items, use a soft decorative tablecloth or felt pad on the surface to provide protection.

(5) Lubricate connectors: Regularly lubricate moving parts (such as hinges and slide rails) to maintain flexibility.

WARNING

Need Two Or More People To Complete

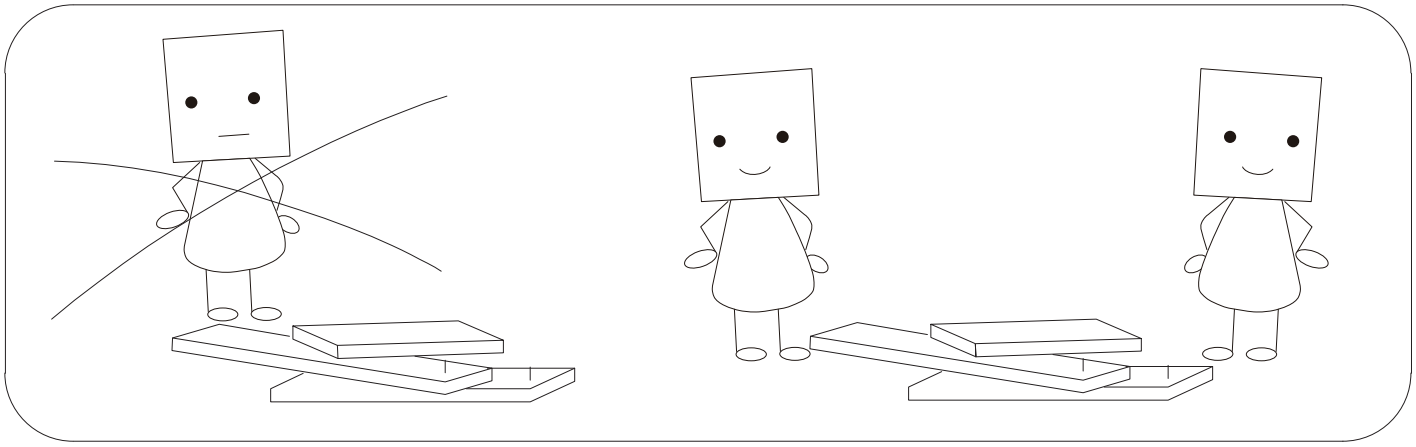

Assemble Item On a Clean Flat Surface

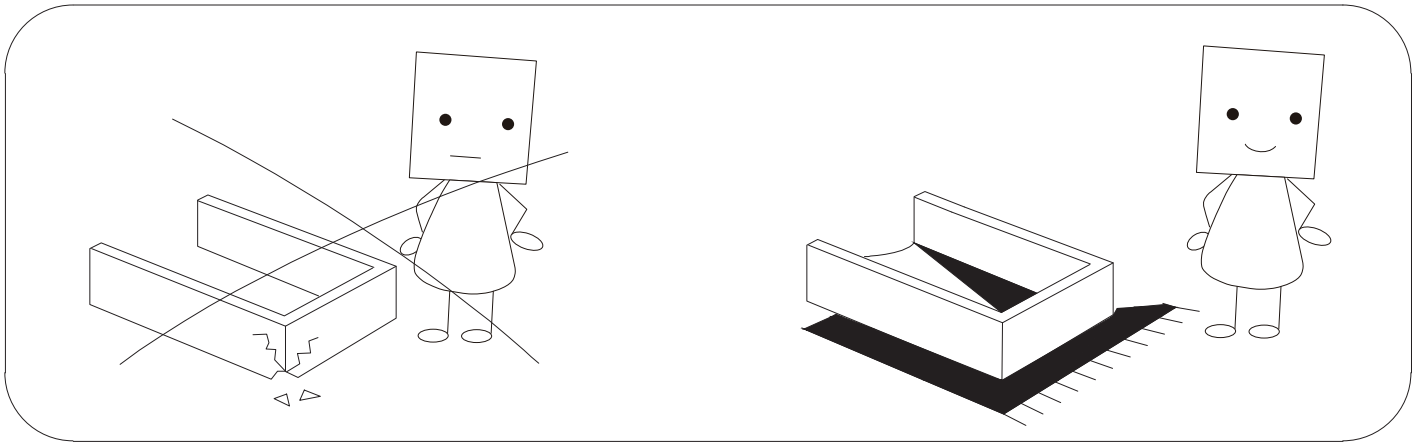

- Please check you have all hardware before assembling.
- Please ensure you have the name of the item and hardware part required and quantity.
- If you have any questions, please contact us by original purchase platform.

we will reply you ASAP.

EXPLODED DRAWING:

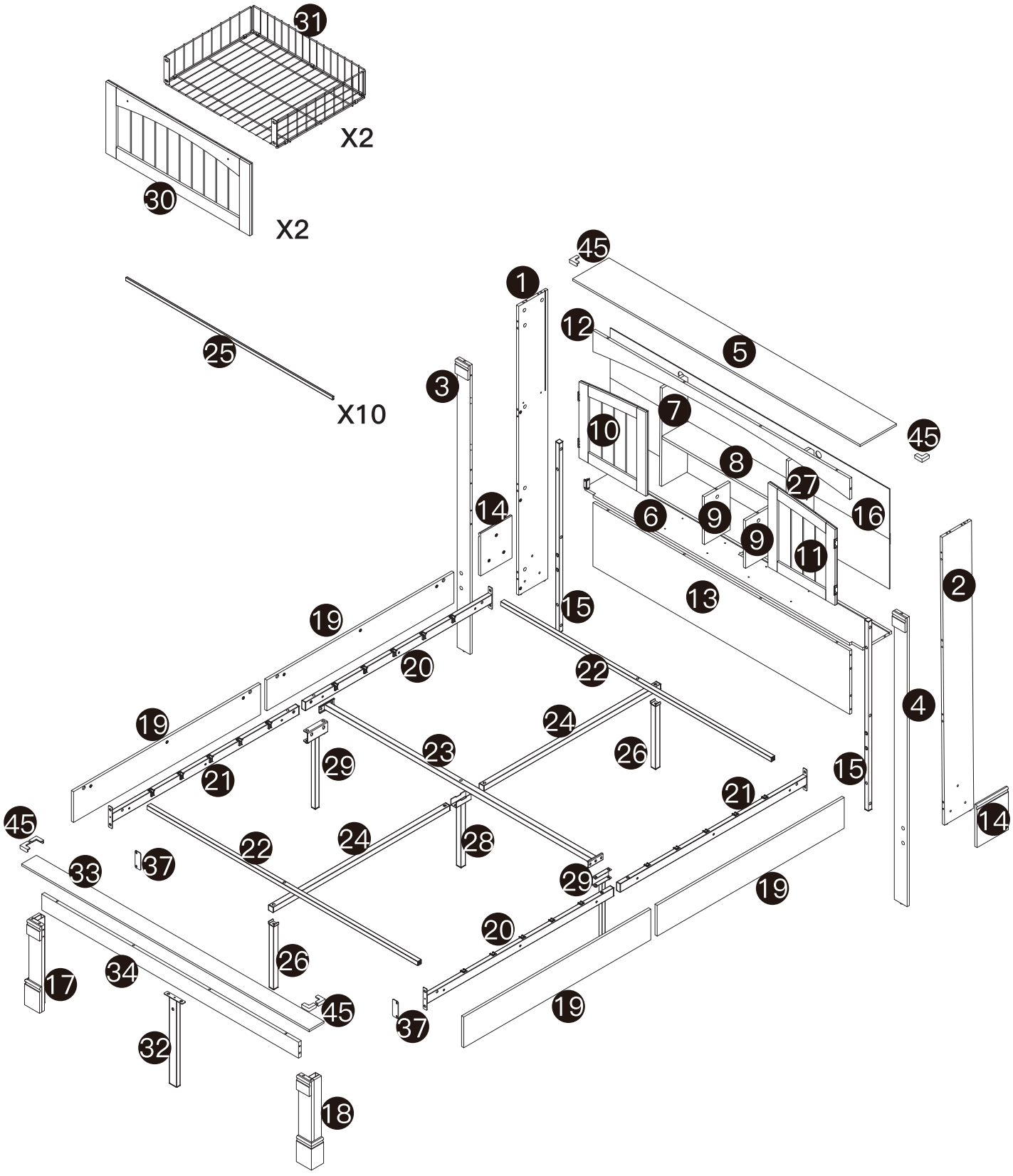

Please check all parts and accessories according to the parts list before assembling, make sure all contents are sufficient and in good condition.
If there is any parts missing or defective, please contact us with purchase platform message immediately to get replacement parts.

PARTS:

Package A

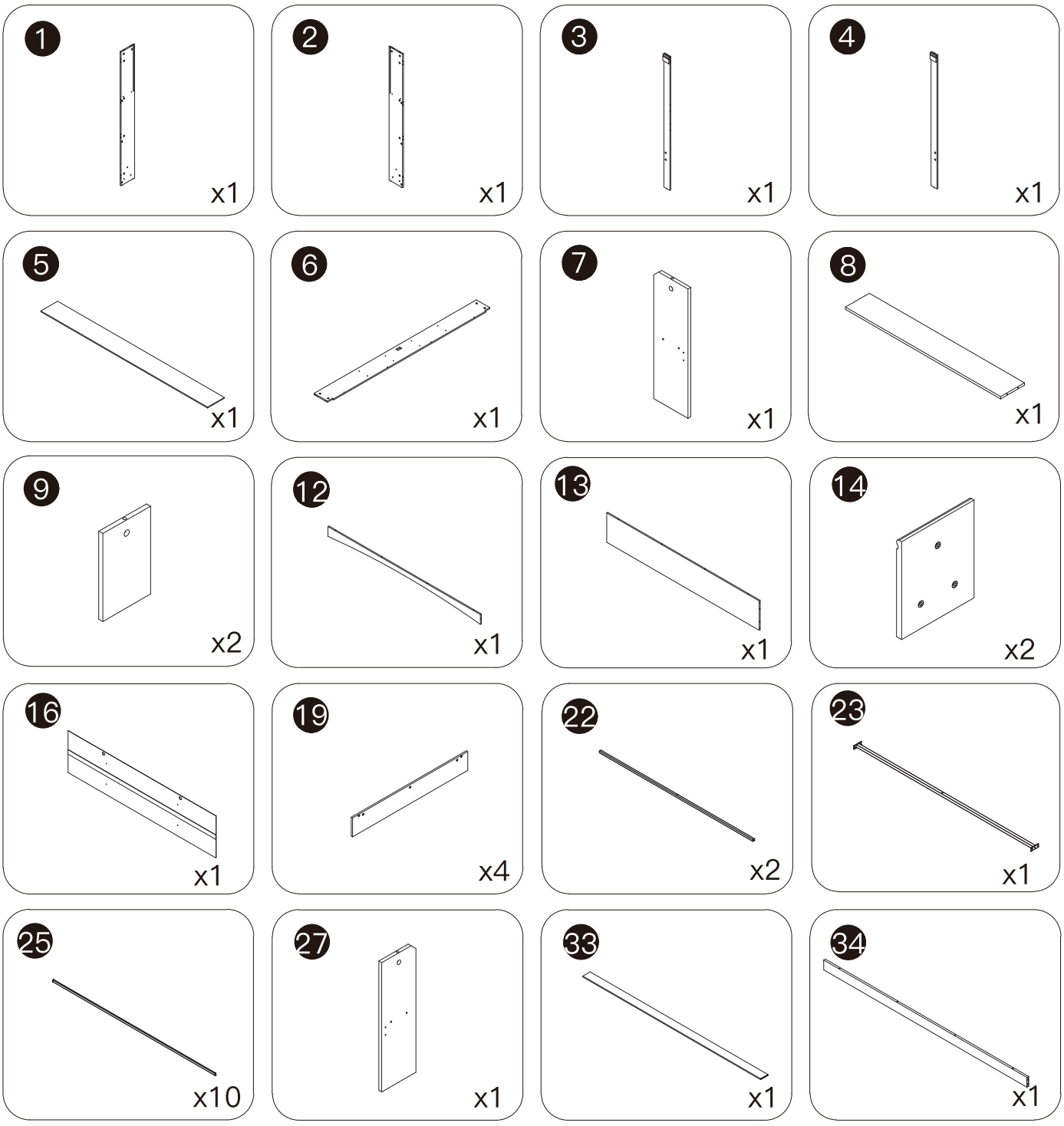

Package B

10

x1

11

x1

15

x2

17
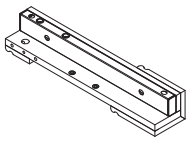
x1

18
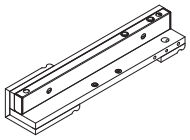
x1

20
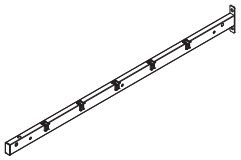
x2

21
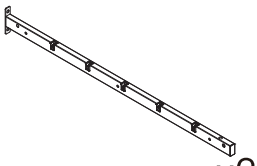
x2

24
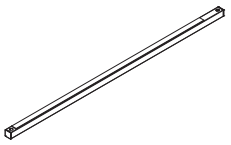
x2

26

x2

28
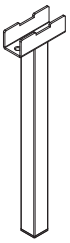
x1

29

x2

30
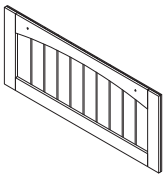
x2

31
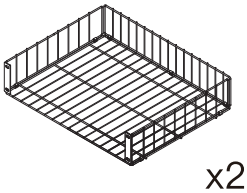
x2

32
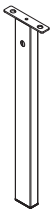
x1

35
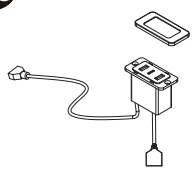
x1

36
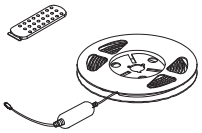
x1

37

x2

38
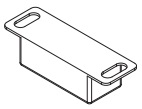
x2

39
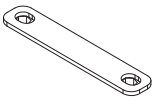
x2

40

x2

41
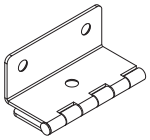
x4

42

x4

44
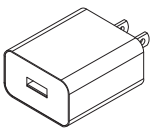
x1

45
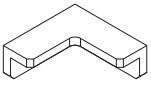
x6

A



Ø6x30 x20

B



M8x40mm x6

C



M3x12mm x2

D

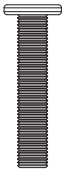

M8x60mm x7

E



M8x30mm x8

F



M6x30mm x23

G

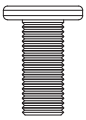

M6x20mm x10

H

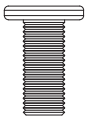

M6x10mm x16

K

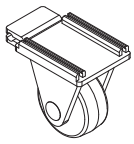

x8

L



M6x40mm x44

M



Ø15x10 x44

N



M5x30mm x16

J



M3.5x12mm x28

P

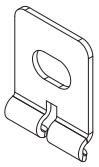

x2

Q

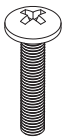

M4x20mm x4

R



M4x80mm x1

S



M3x80mm x1

T

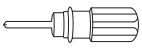

105 x1

V

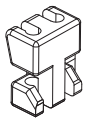

x4

HOW TO INSTALL

NOTICE:

1. Use electric drill for easier installation experience.
2. Please drive the screws in pre-drilled holes.
3. Please strictly follow the instruction and diagram in every step.
4. Make sure every part is on the right position, otherwise it may cause unnecessary problem.
5. Select the proper component via the label on every part while assembling.

REMARK:

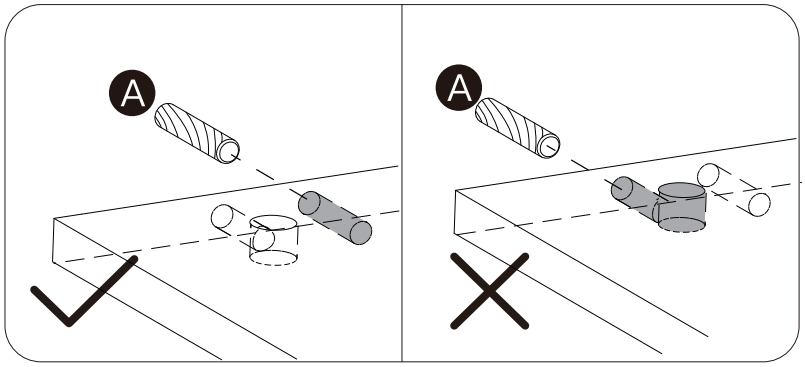

Avoid inserting part A into wrong holes.

ENSURE PART L IS INSTALLED VERTICALLY

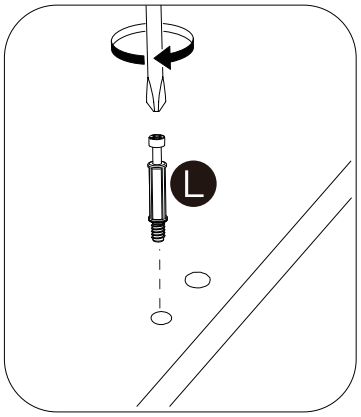

Part L must be installed in the specific holes in accordance with the instructions in the manual.

Please ensure that part L is facing the direction of the gap of part M .

When locking part M , please make sure part L is fully inserted.

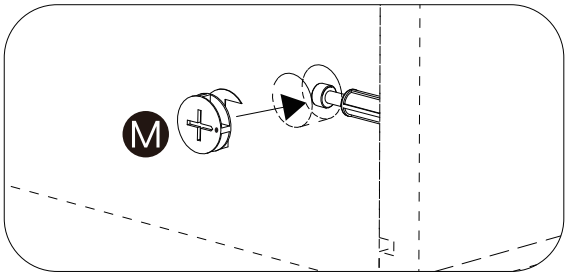

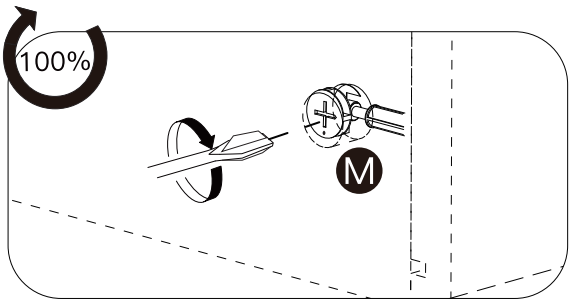

HOW TO INSTALL

STEP 1

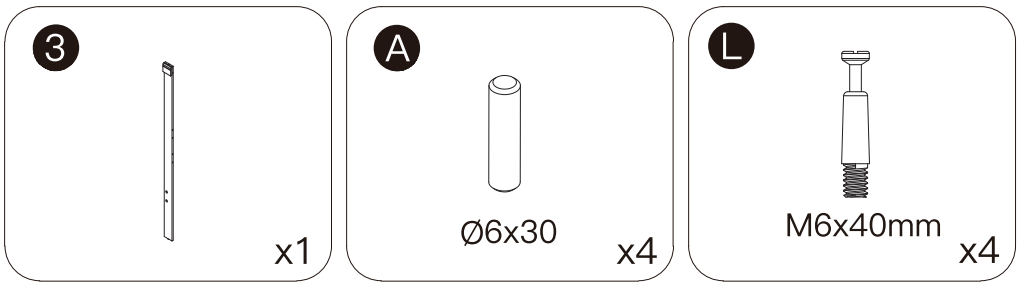

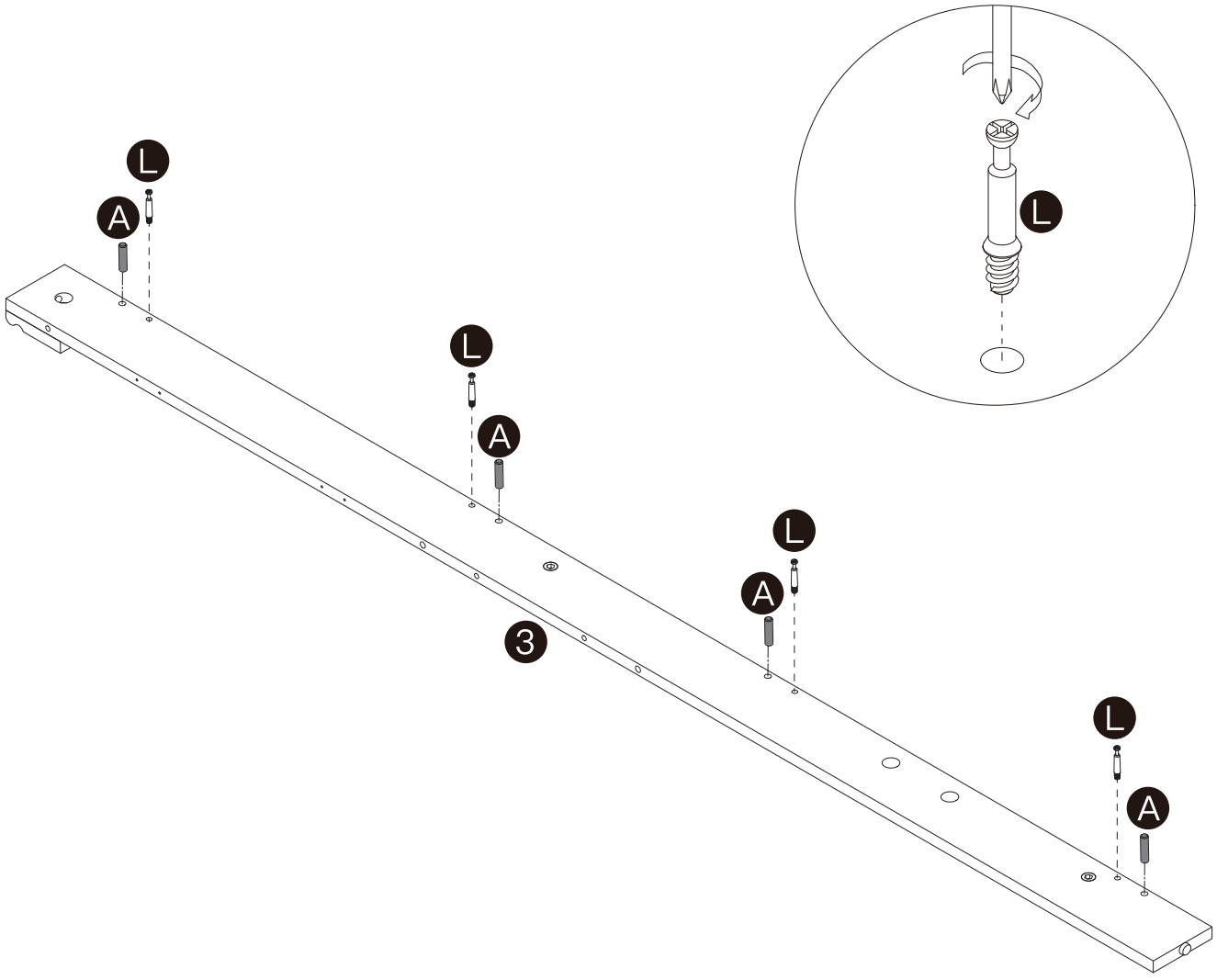

STEP 2

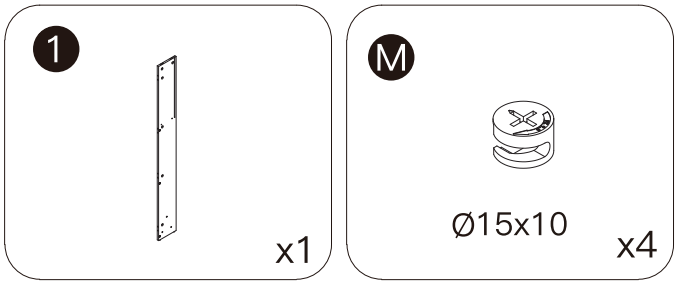

NOTICE:

(1) Please pay attention to the groove orientation of Part 1.

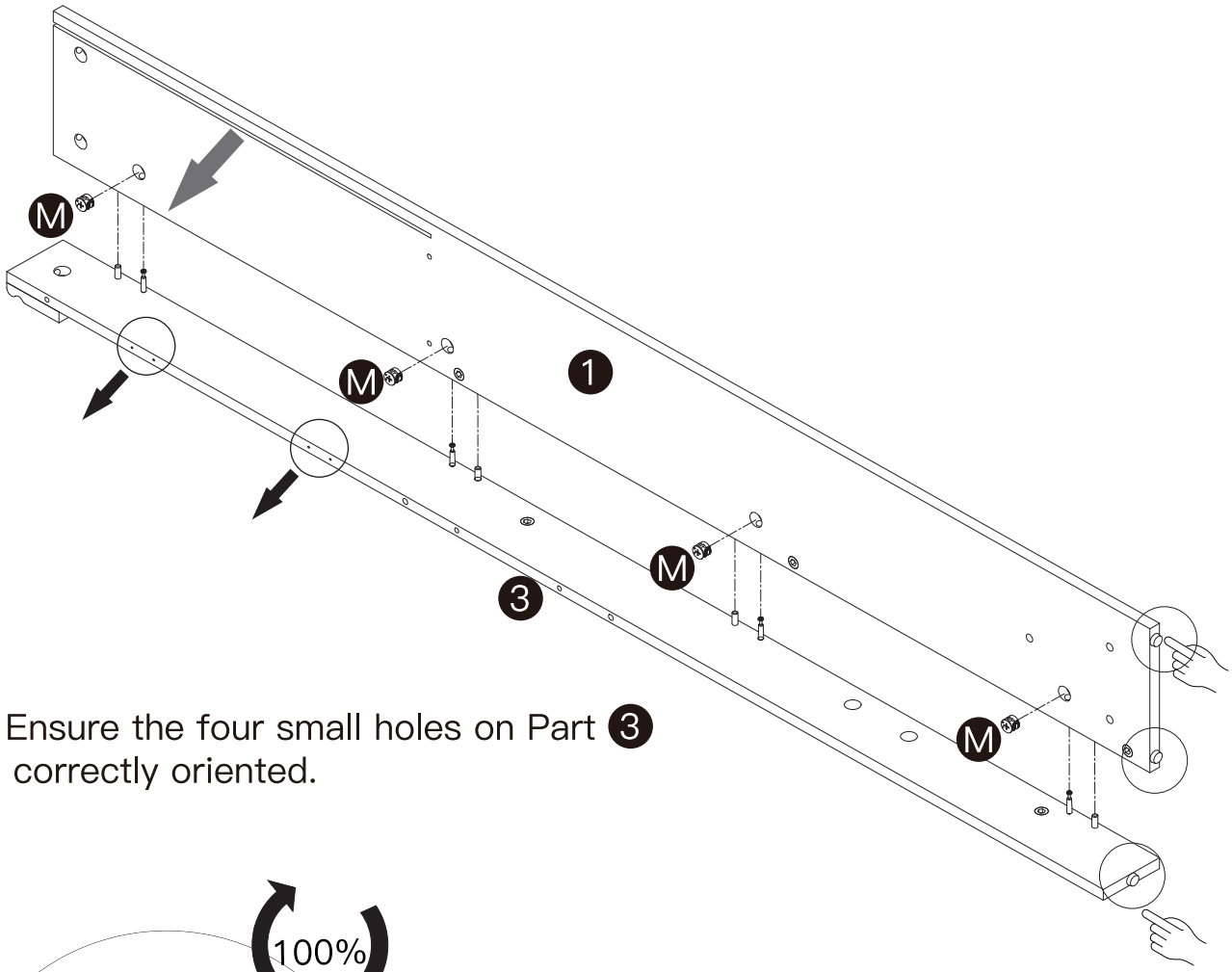

(2) Ensure the four small holes on Part 3 are correctly oriented.

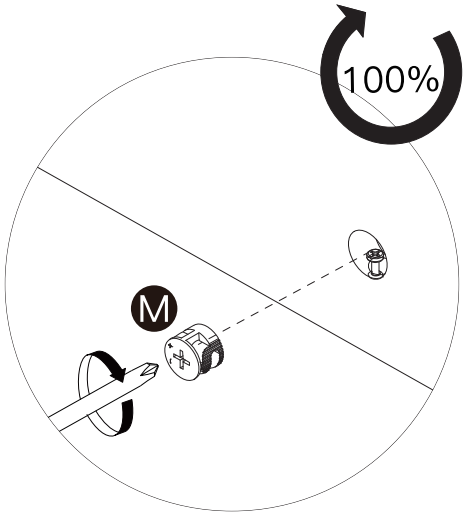

(3) Ensure the foot studs of Part 1 and Part 3 are on the same side.

STEP 3

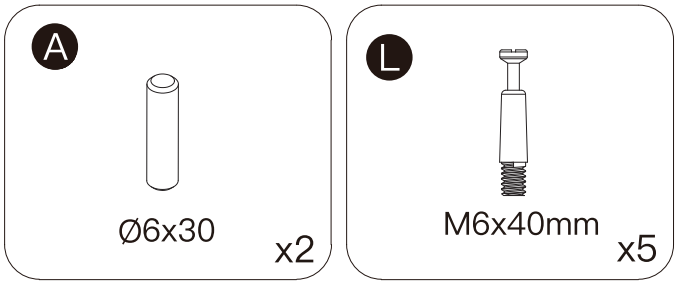

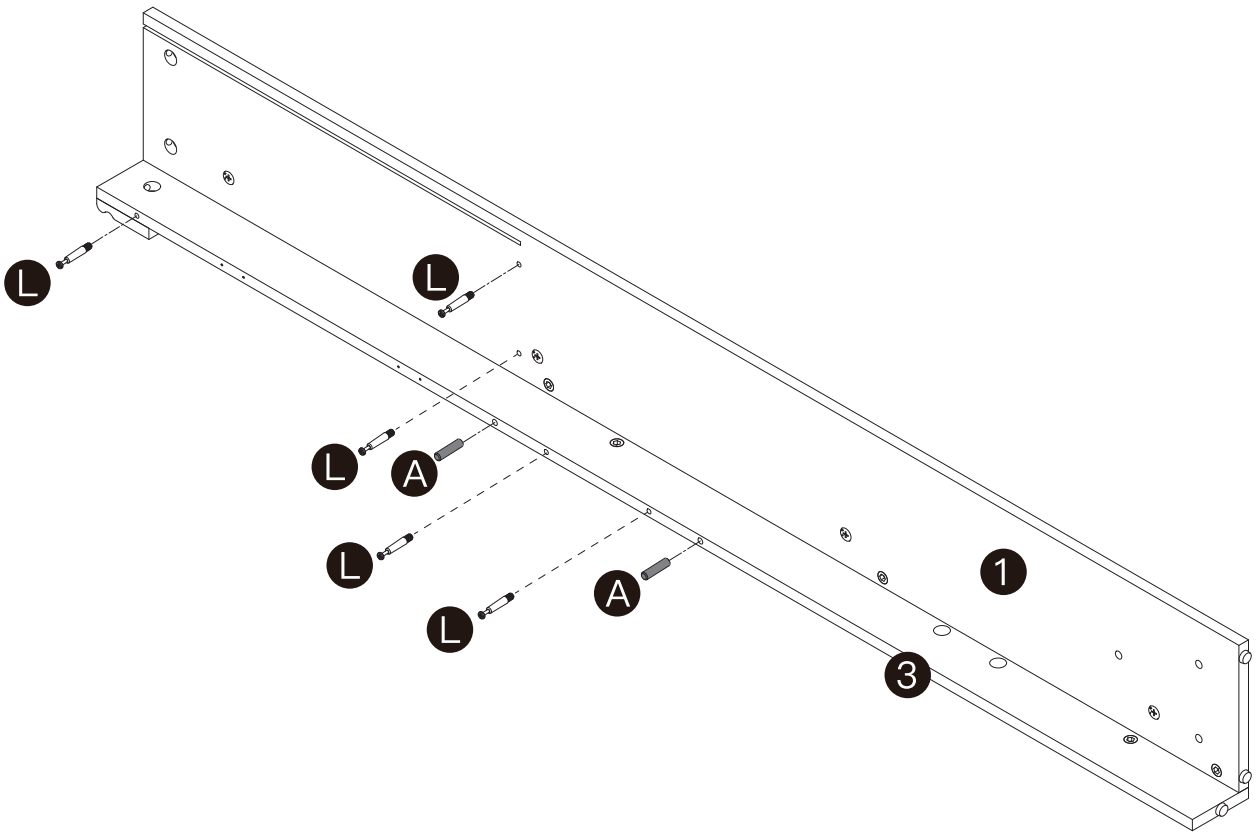

STEP 4

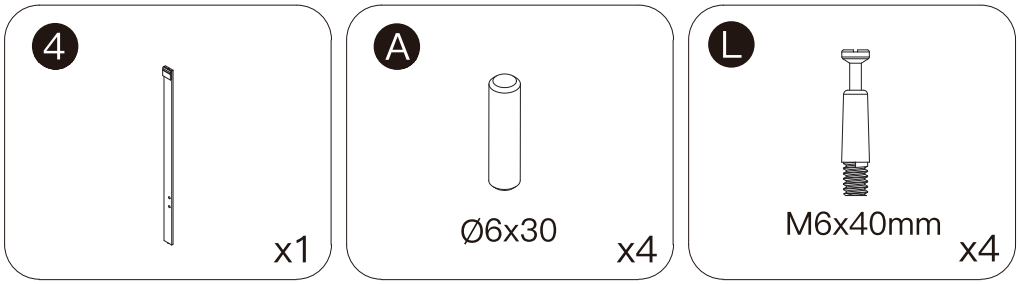

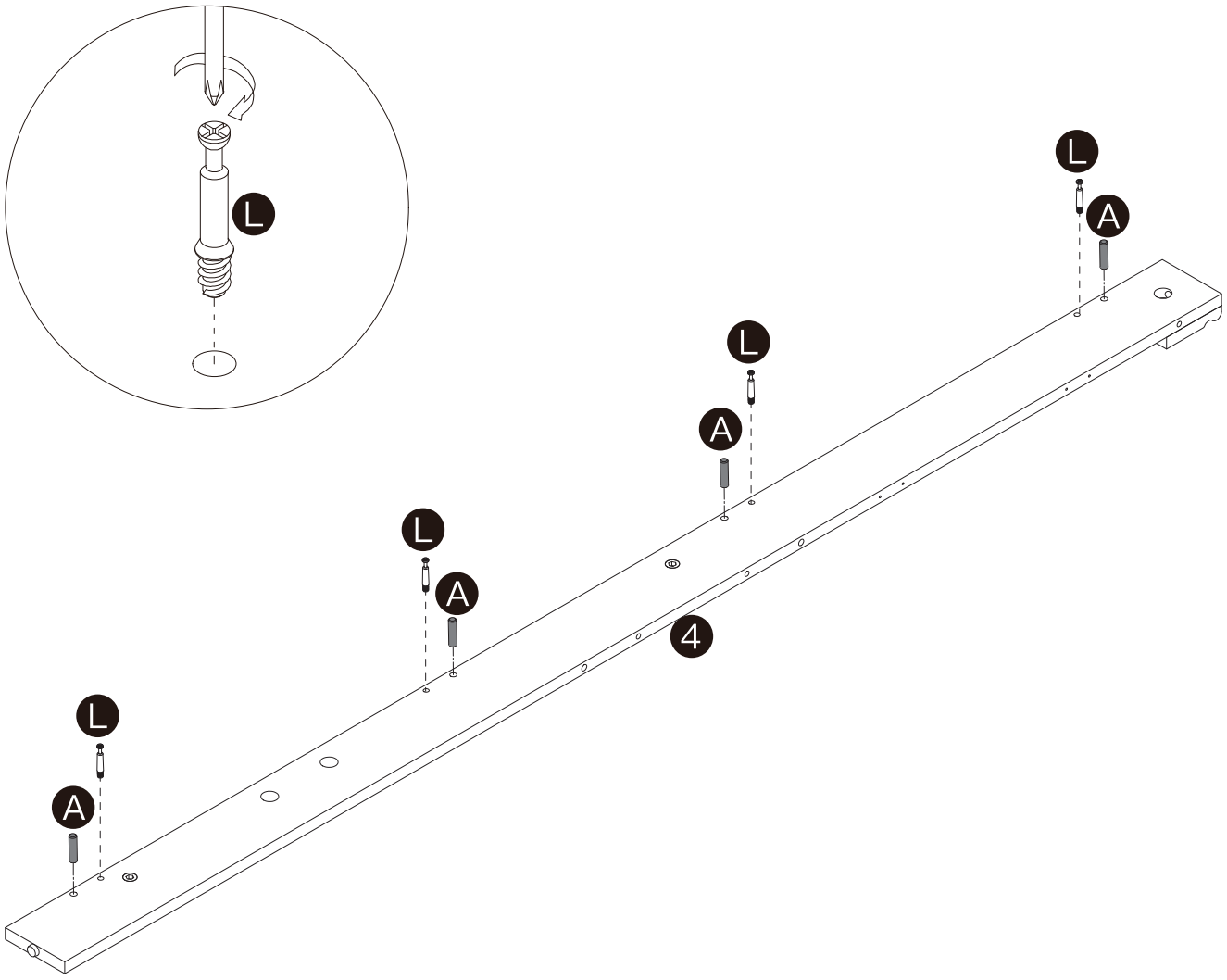

STEP 5

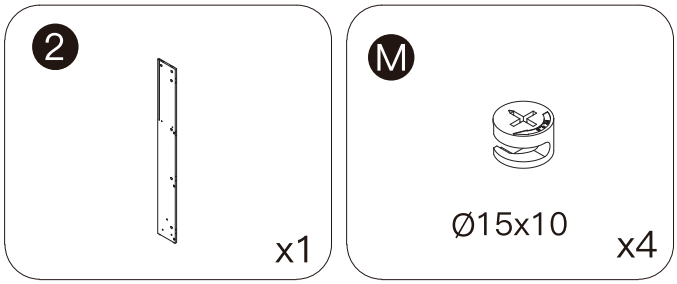

NOTICE:

(1) Please pay attention to the groove orientation of Part 2.

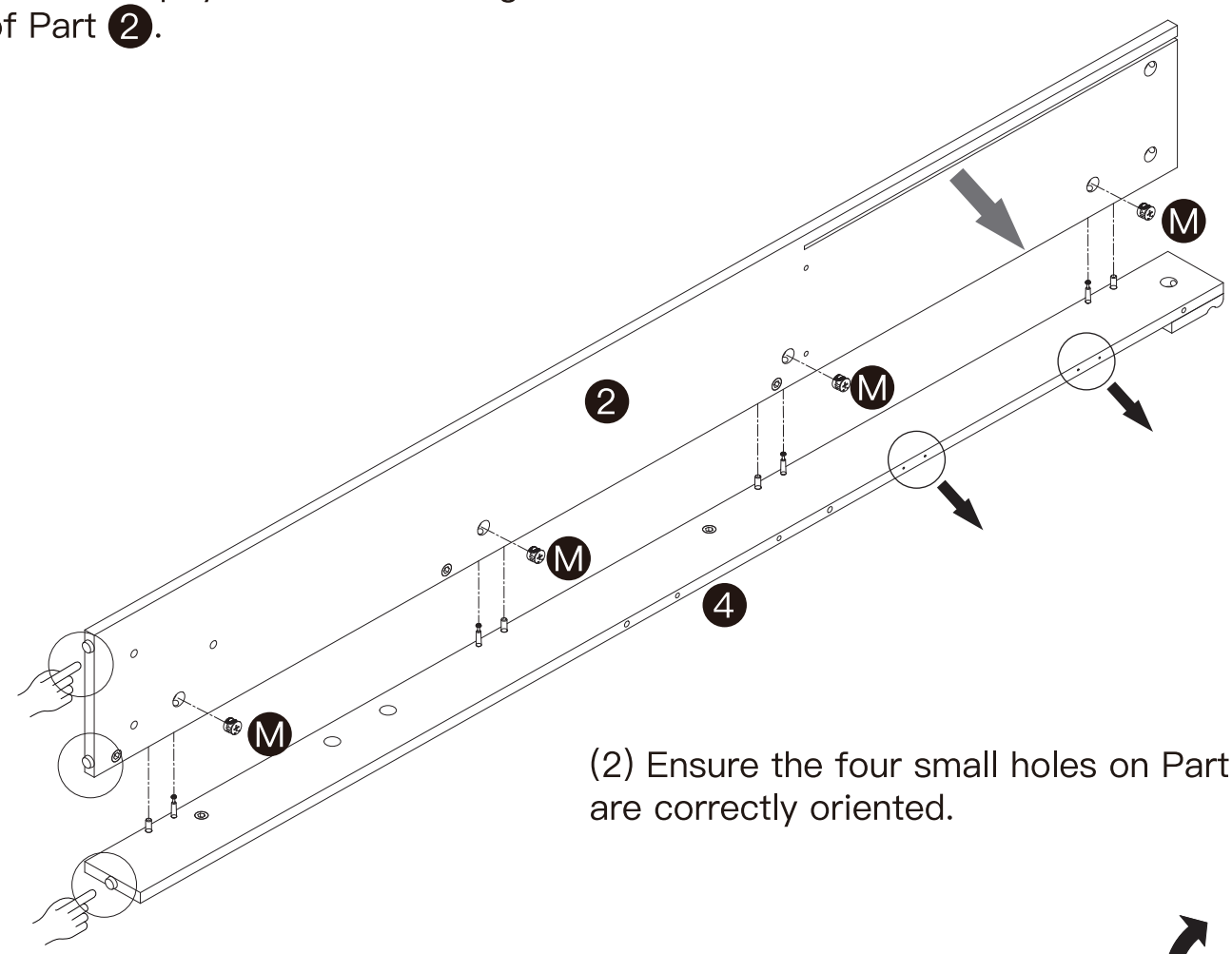

(2) Ensure the four small holes on Part 4 are correctly oriented.

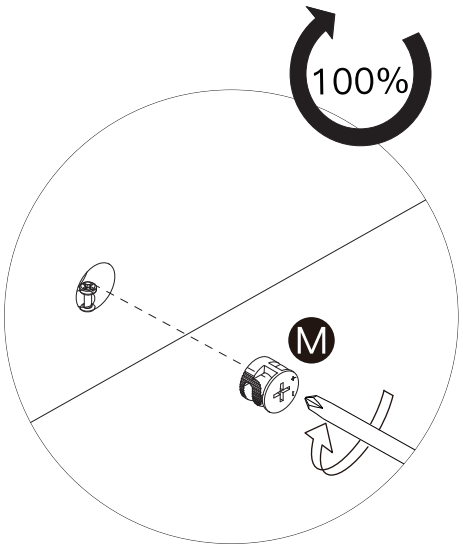

(3) Ensure the foot studs of Part 2 and Part 4 are on the same side.

STEP 6

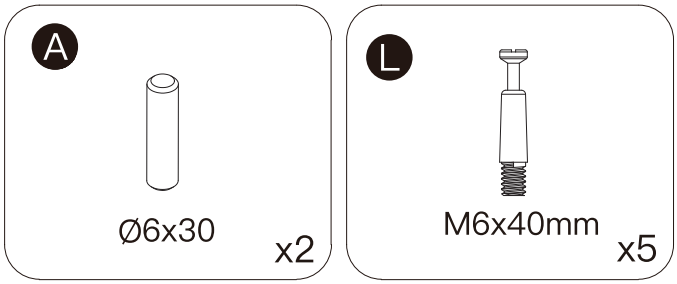

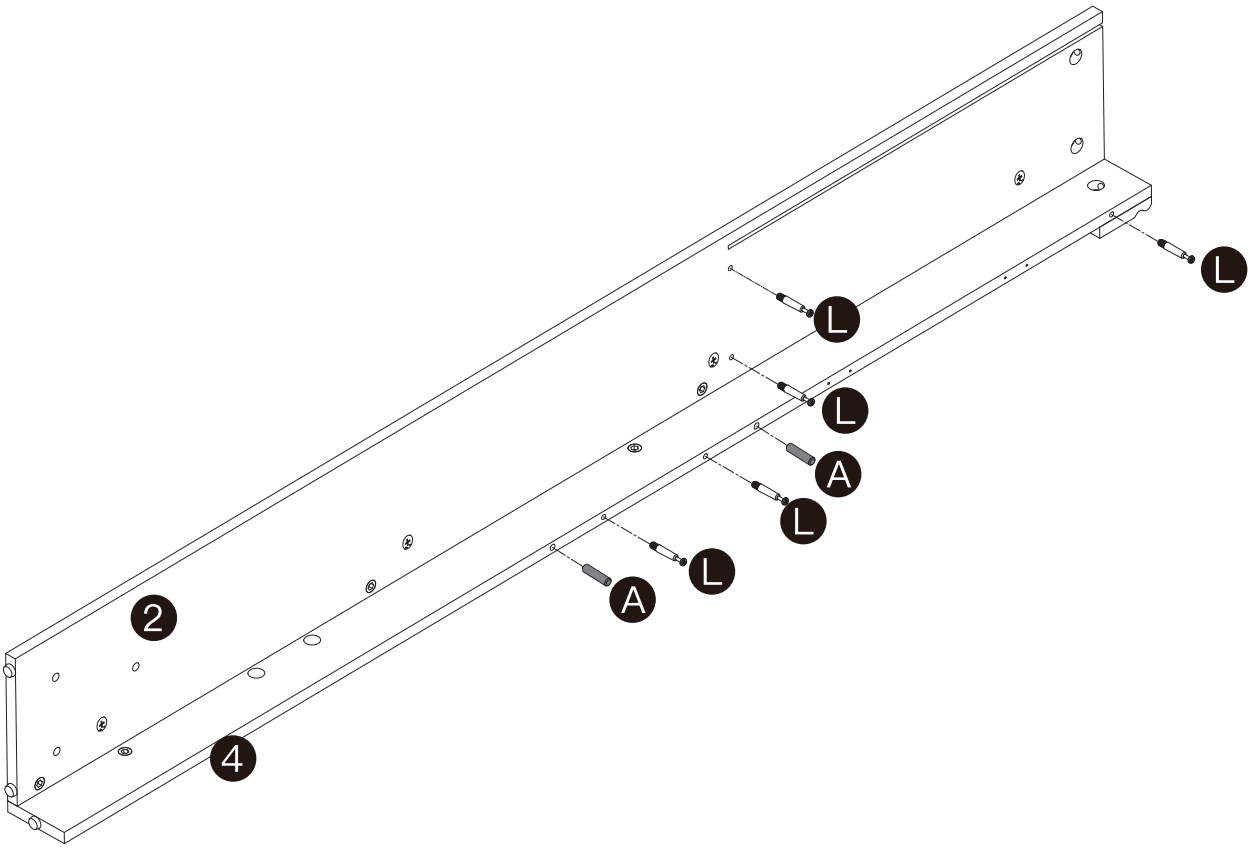

STEP 7

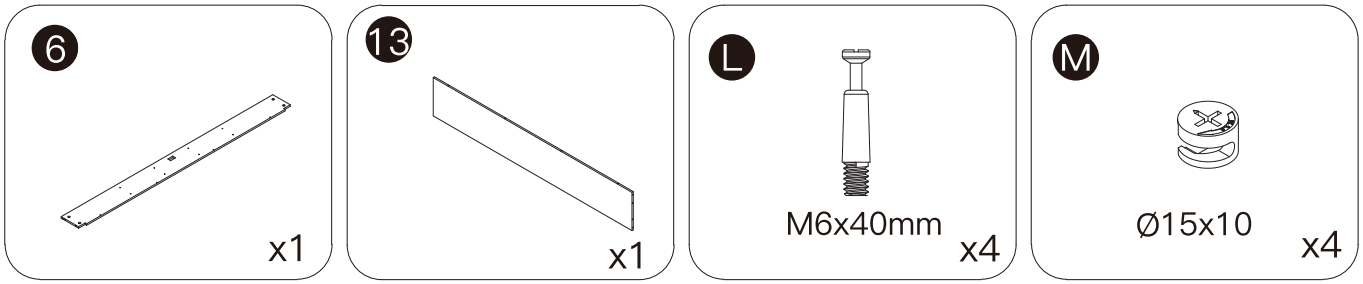

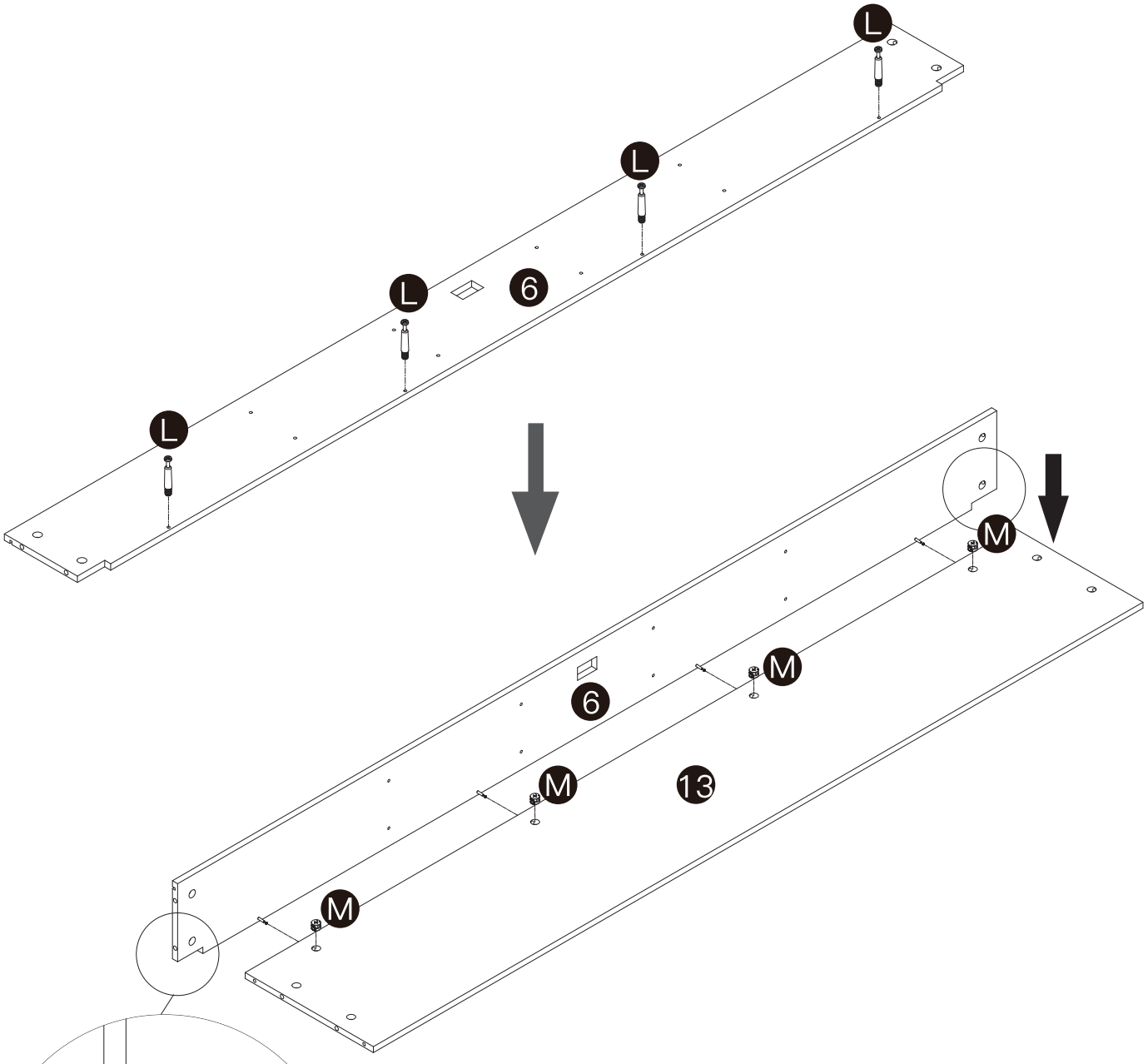

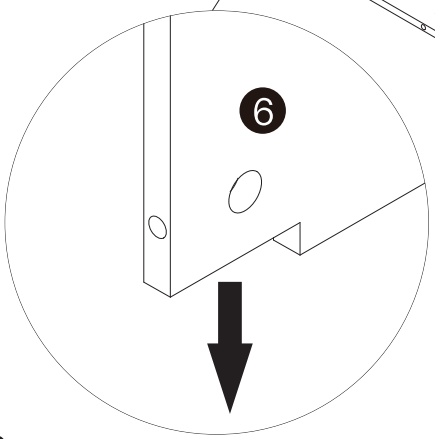

NOTICE:
Ensure the notch of Part 6 faces downward.

STEP 8

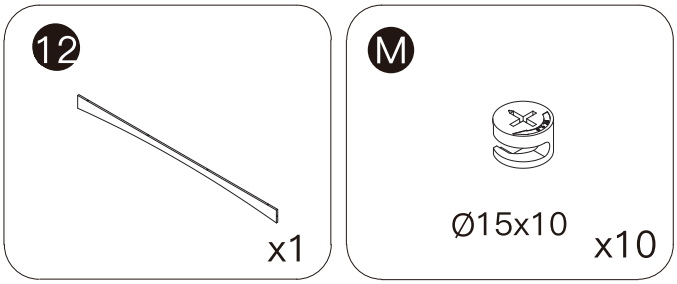



HEAVY! You may need assistance with this step.

NOTICE:

(1) Ensure the flat side of Part 12 faces outward.

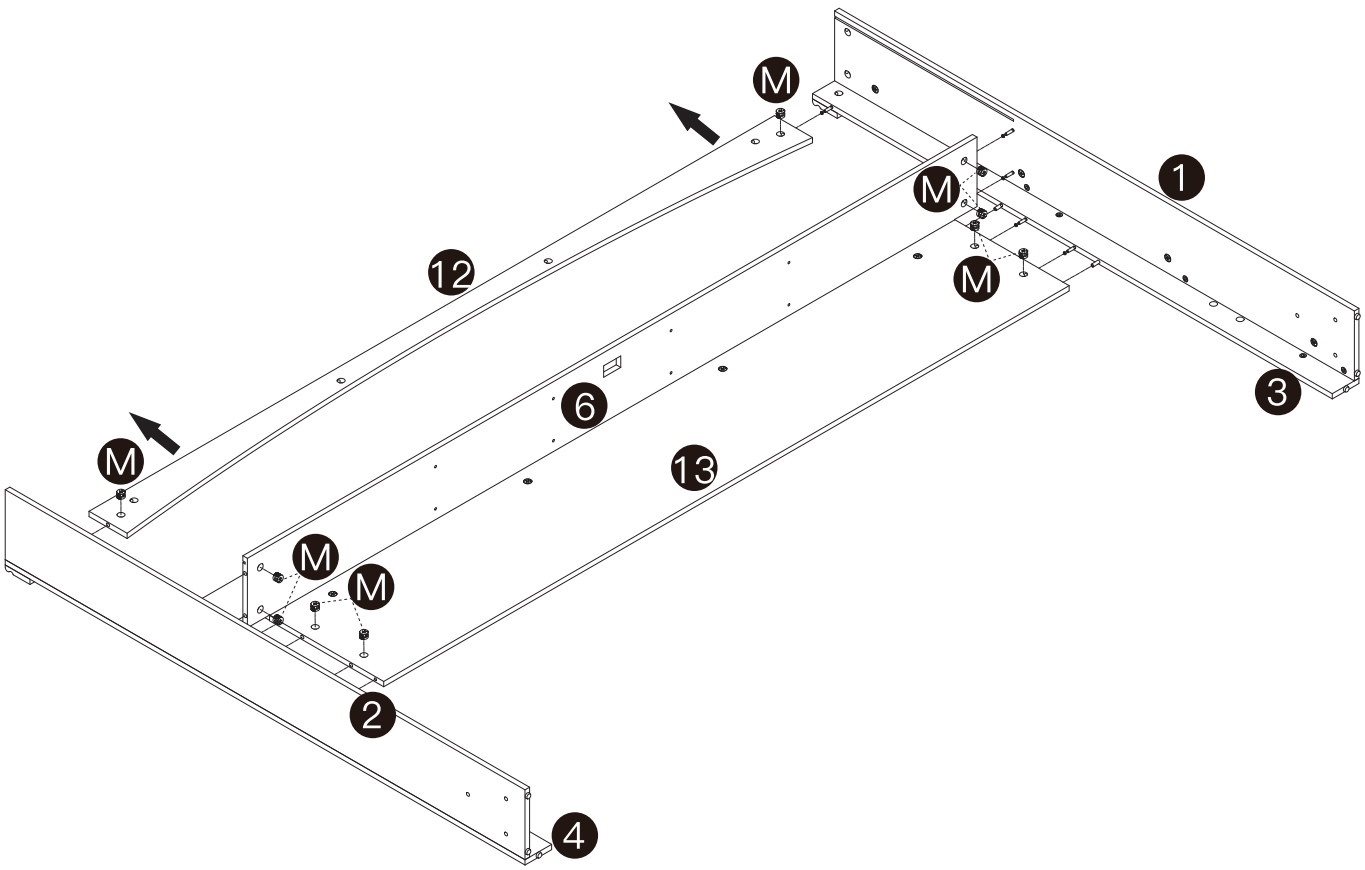

(2) Install one side first, then the other.

STEP 9

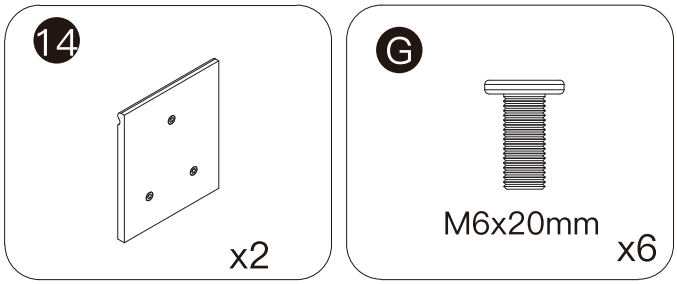

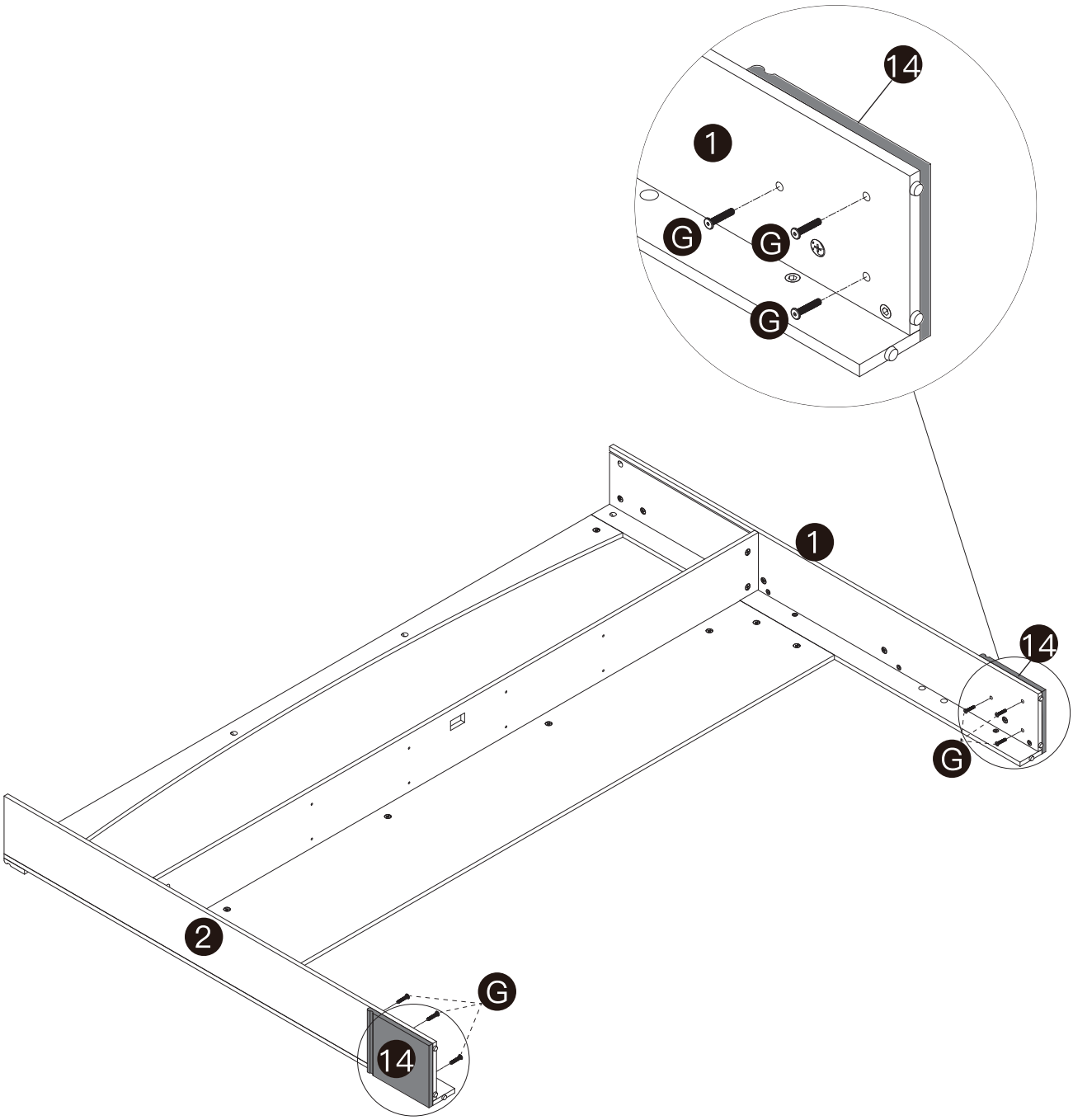

STEP 10

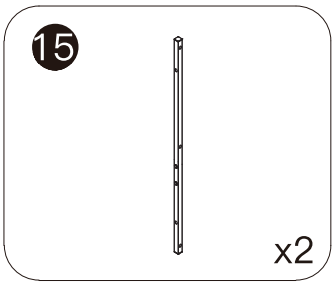

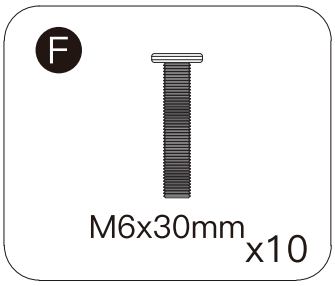

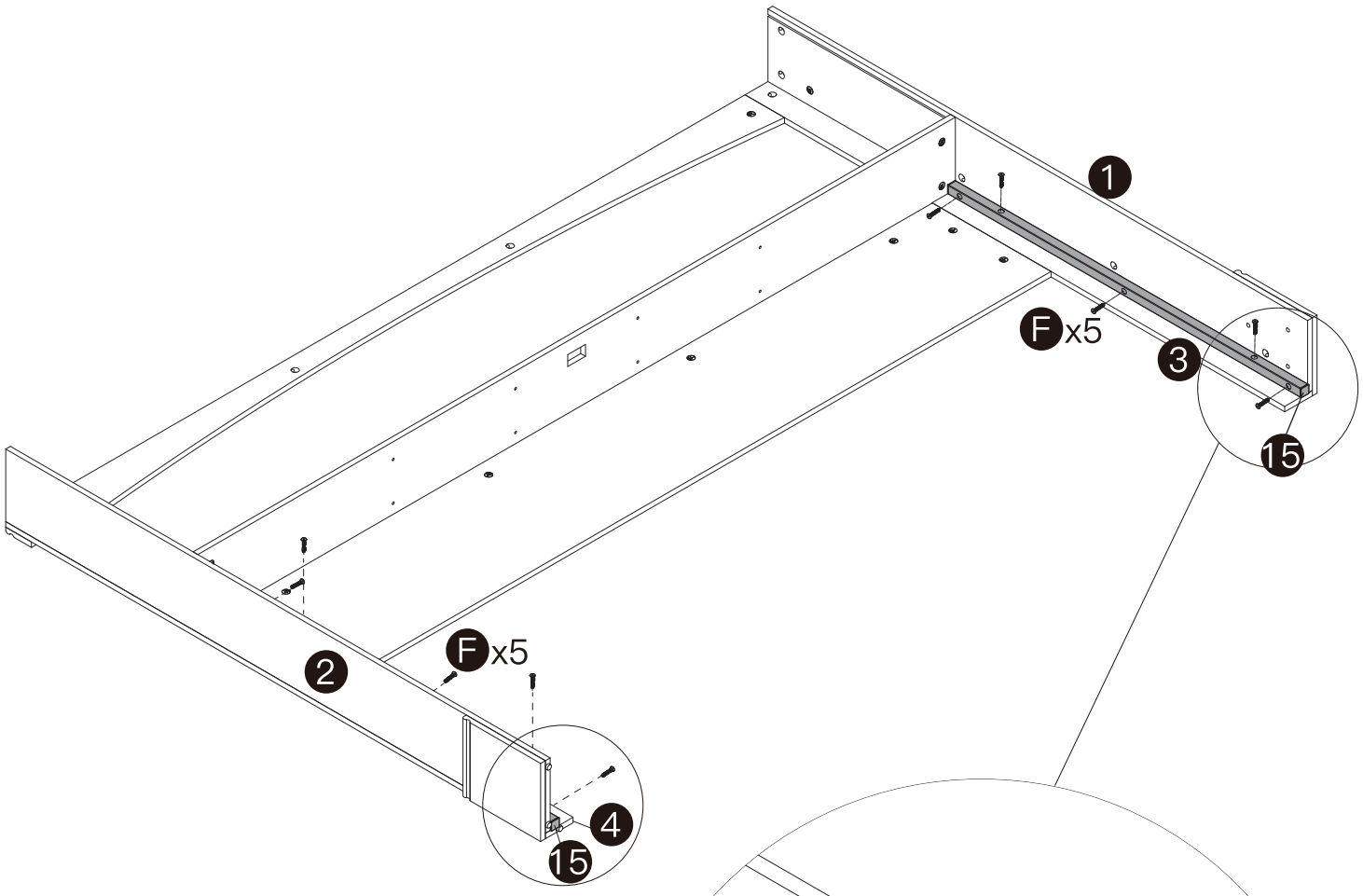

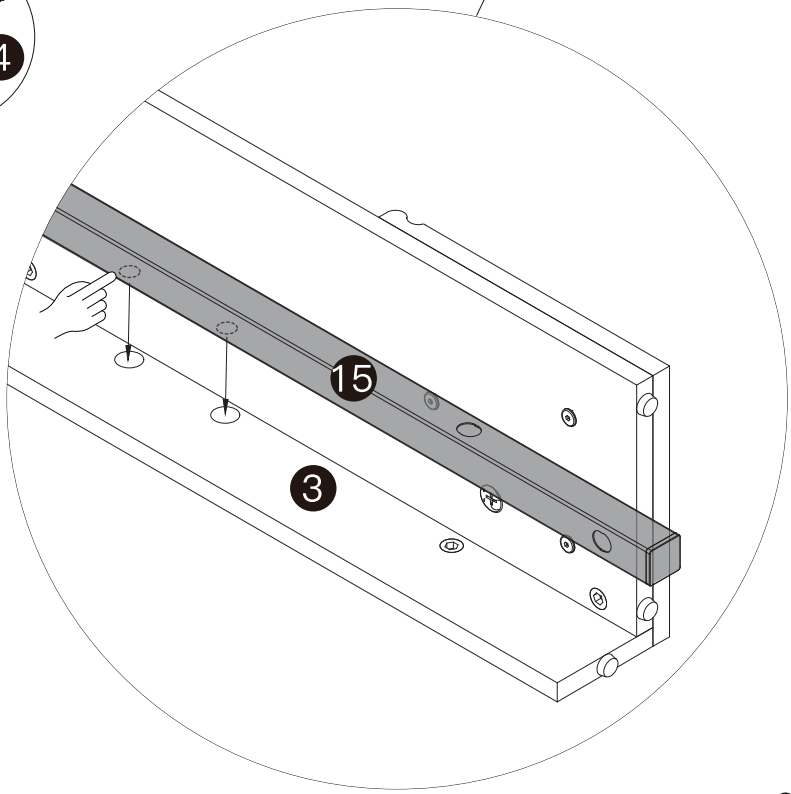

NOTICE:
Ensure the two holes on Parts 3 and 4 align precisely with the designated two holes on Part 15.

STEP 11

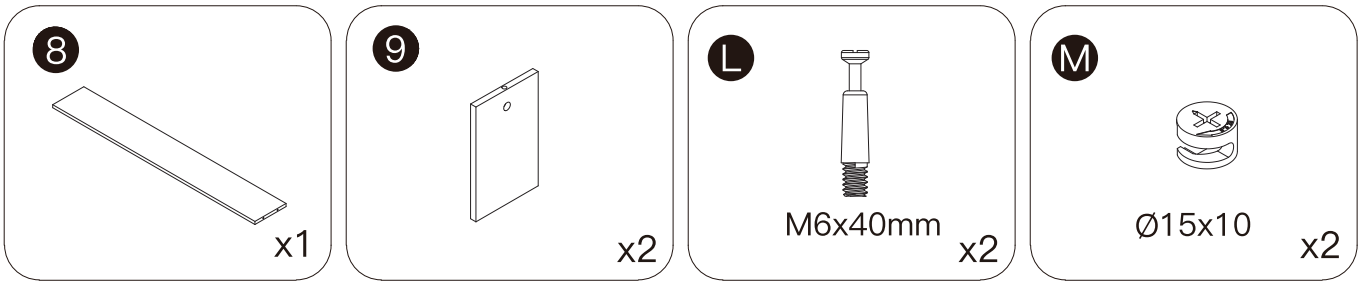

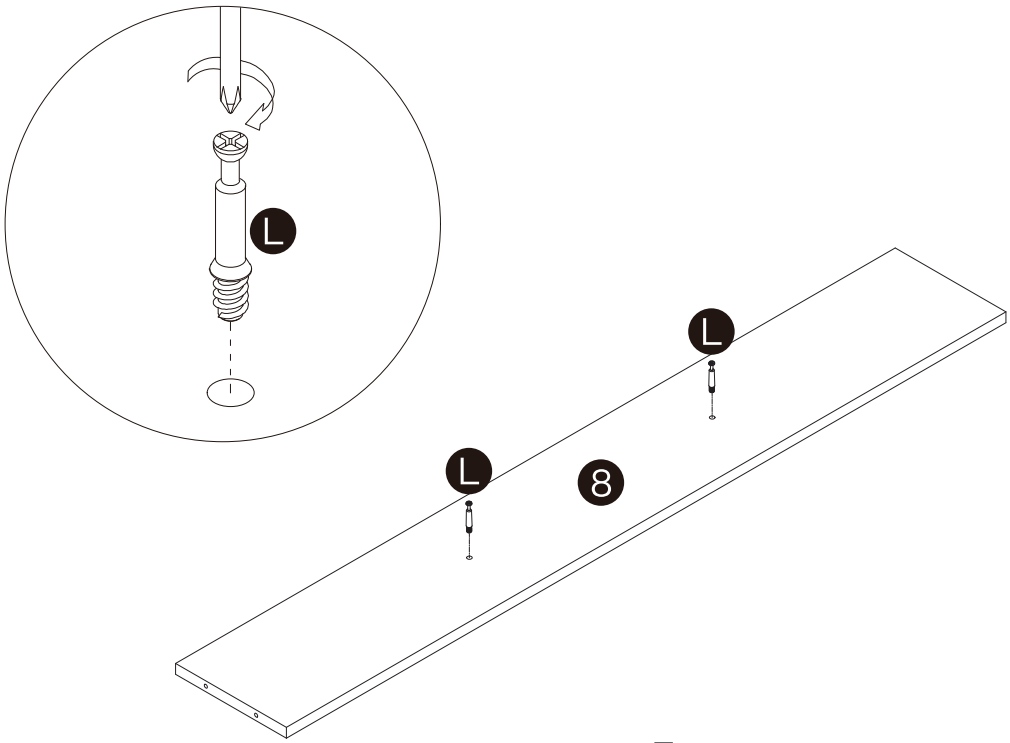

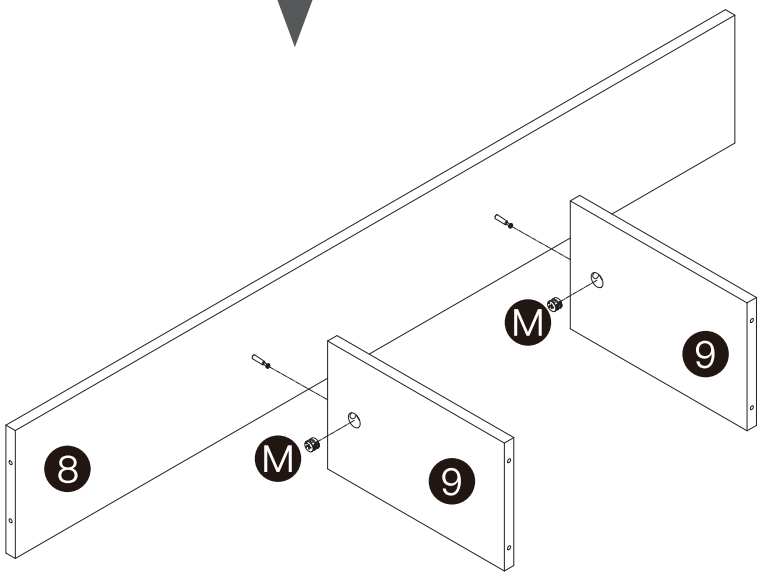

STEP 12

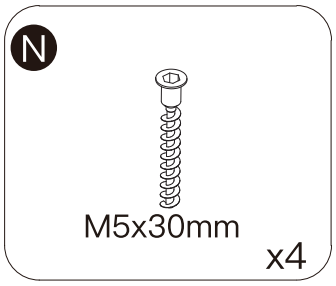

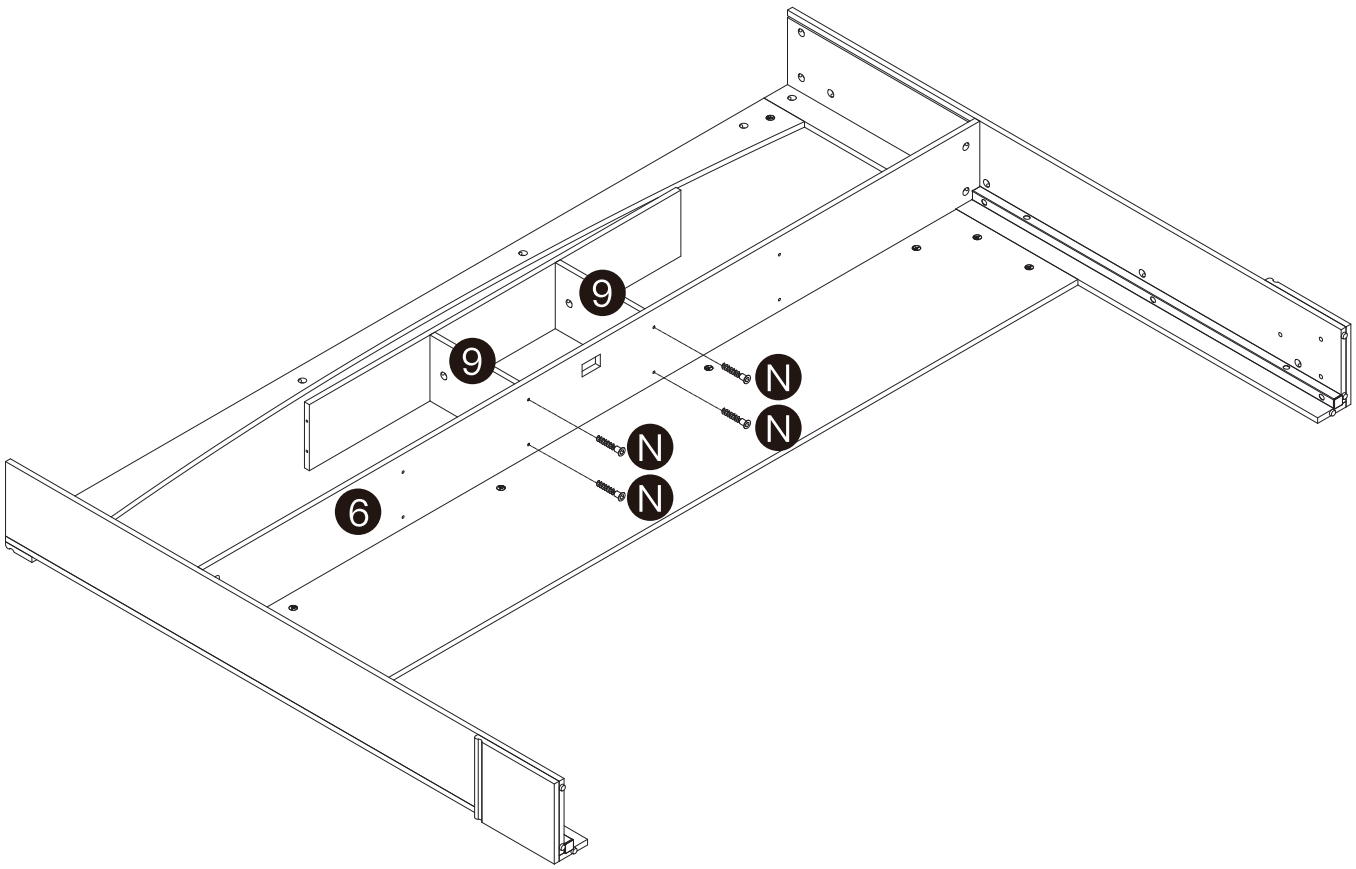

STEP 13

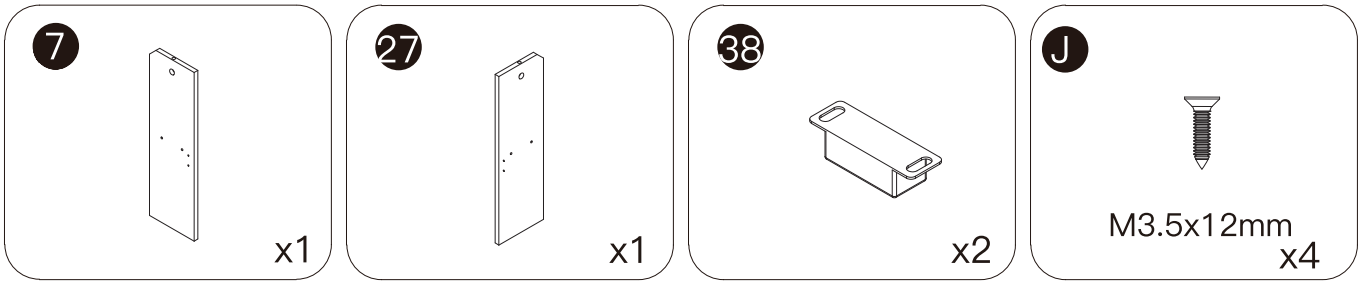

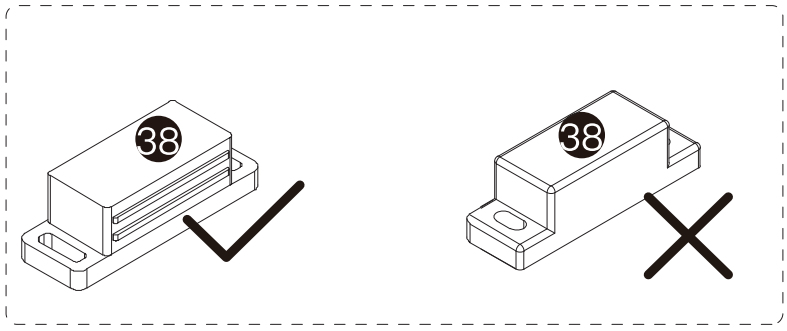

NOTICE:
Please ensure the magnetic side of Part 38 faces the correct direction before installation (opposite to the notch on the wooden board).

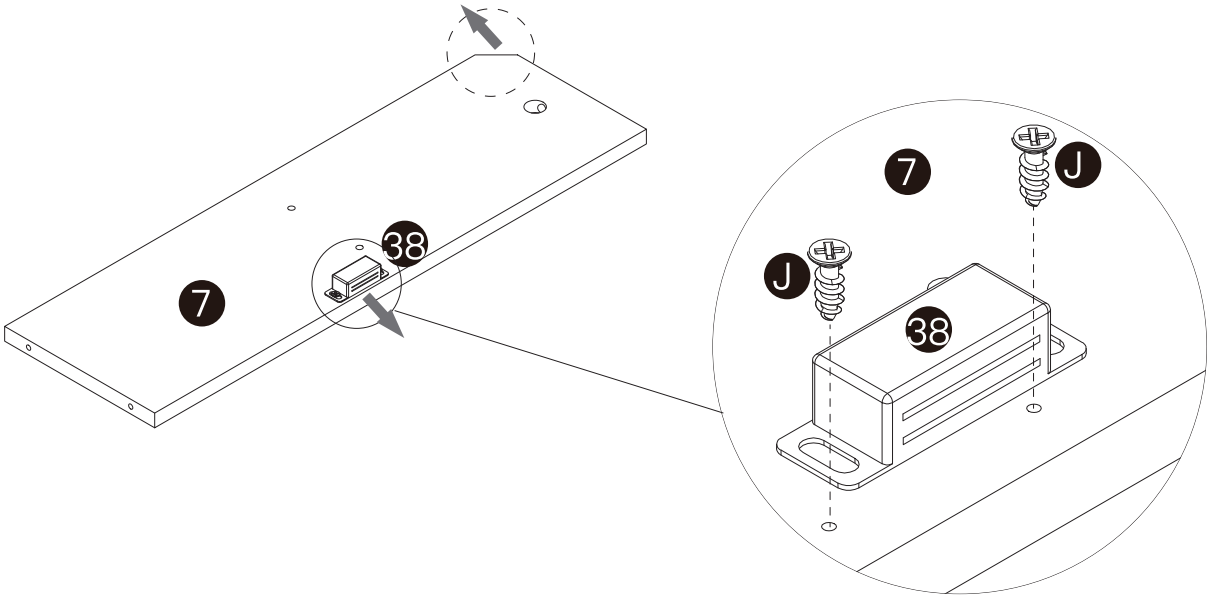

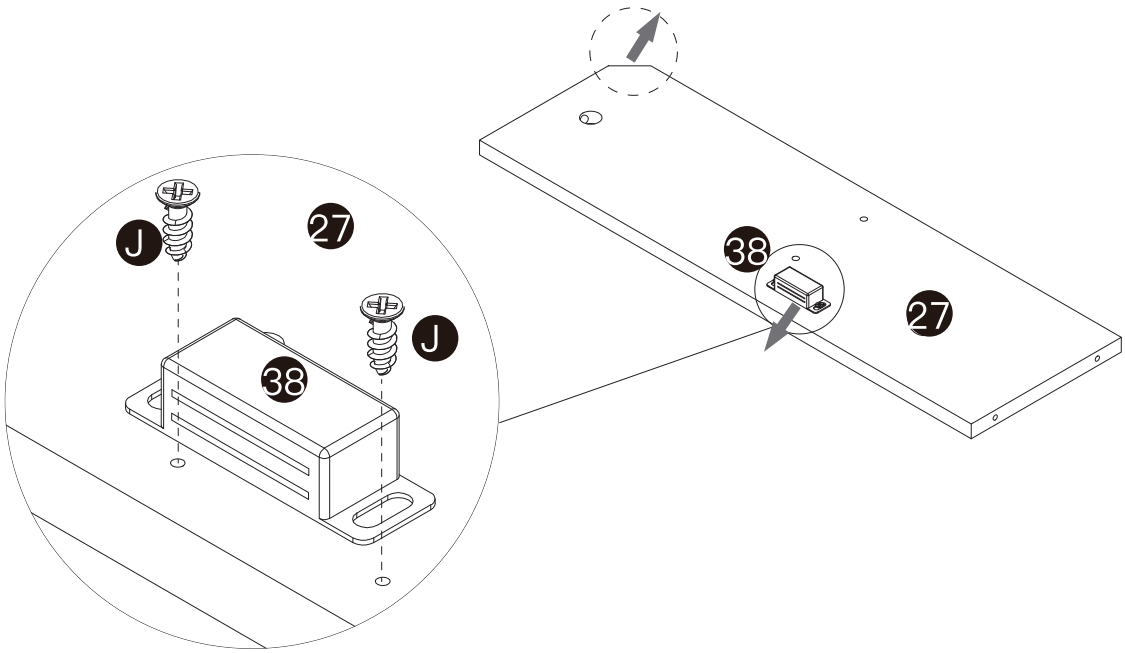

STEP 14

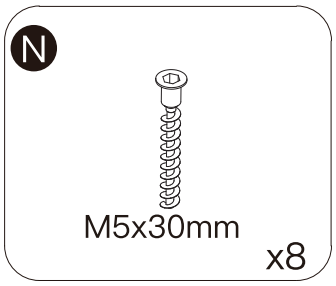

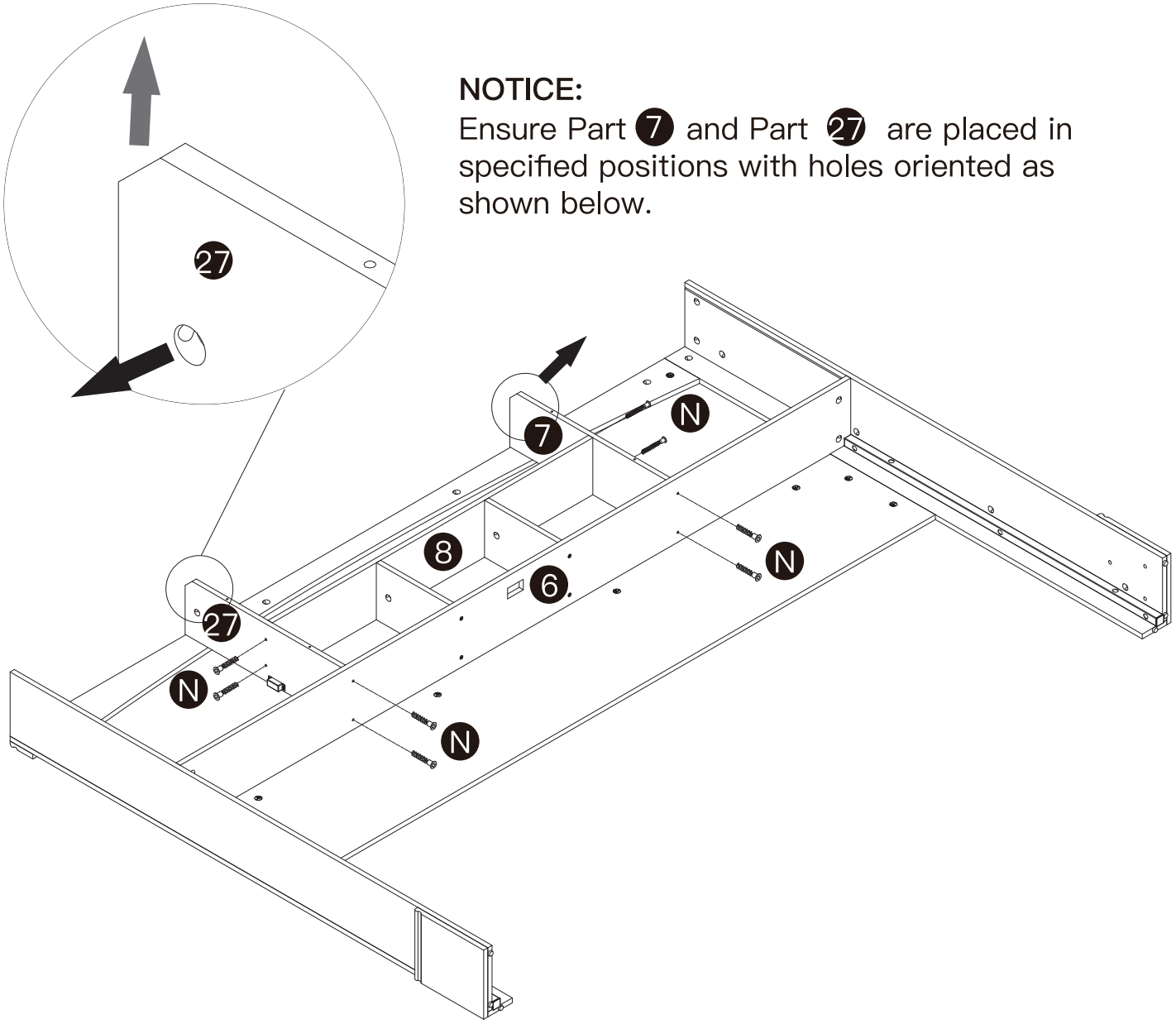

NOTICE:
Ensure Part 7 and Part 27 are placed in specified positions with holes oriented as shown below.

STEP 15

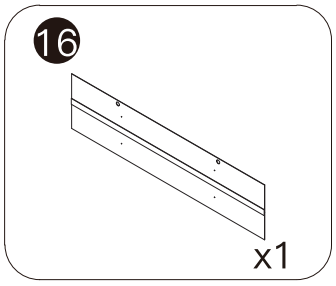



HEAVY! You may need assistance with this step.

NOTICE:

Please ensure Part 16 is fully inserted into the grooves of Part 1, Part 2 and Part 6.

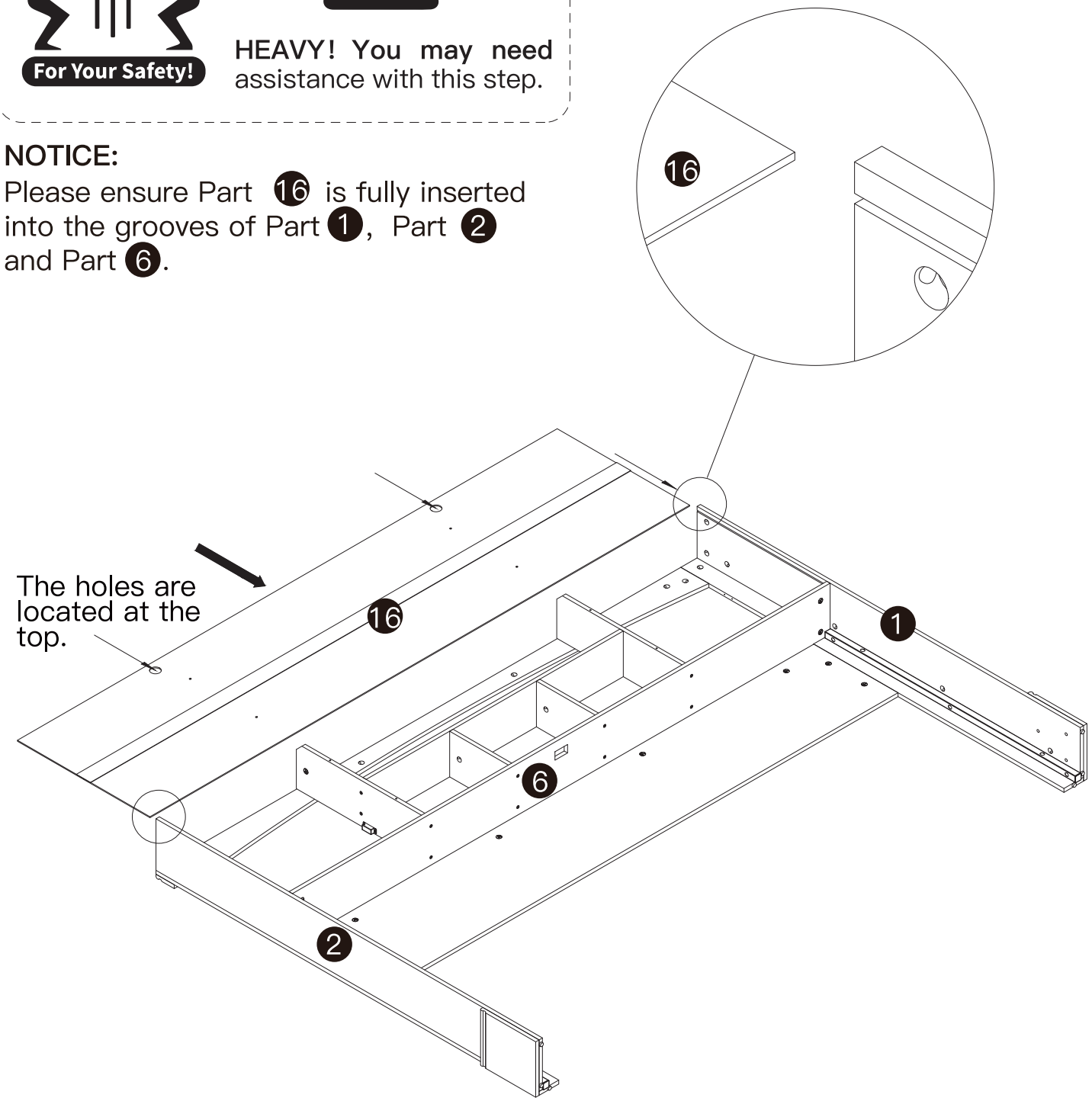

STEP 16

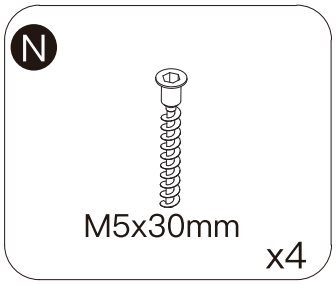

NOTICE:
Align the holes of Part 16 with Part 7 and Part 27 before tightening the screws.

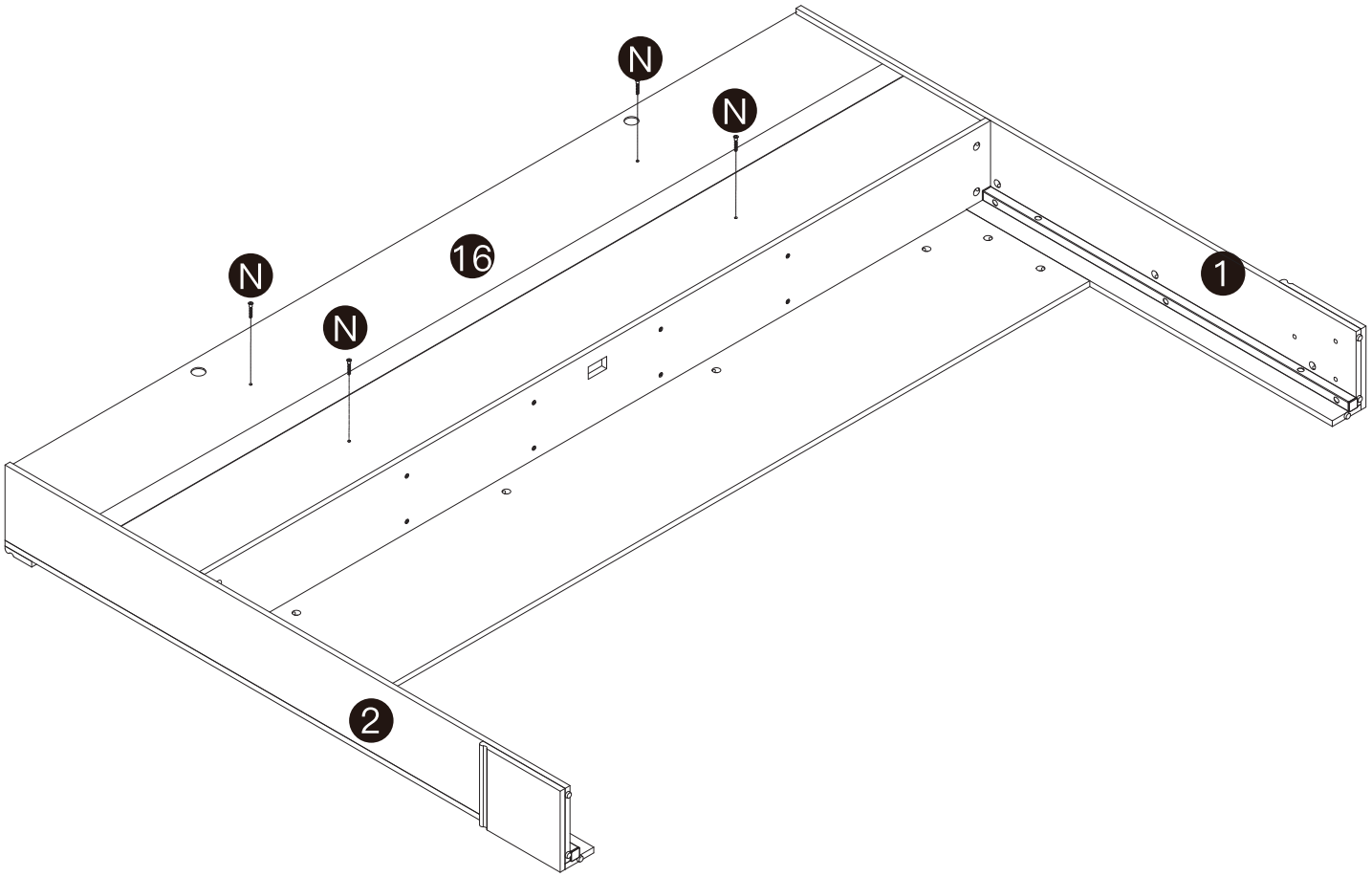

STEP 17

A

Ø6x30 x4

TEAM LIFT

For Your Safety!

HEAVY! You may need assistance with this step.

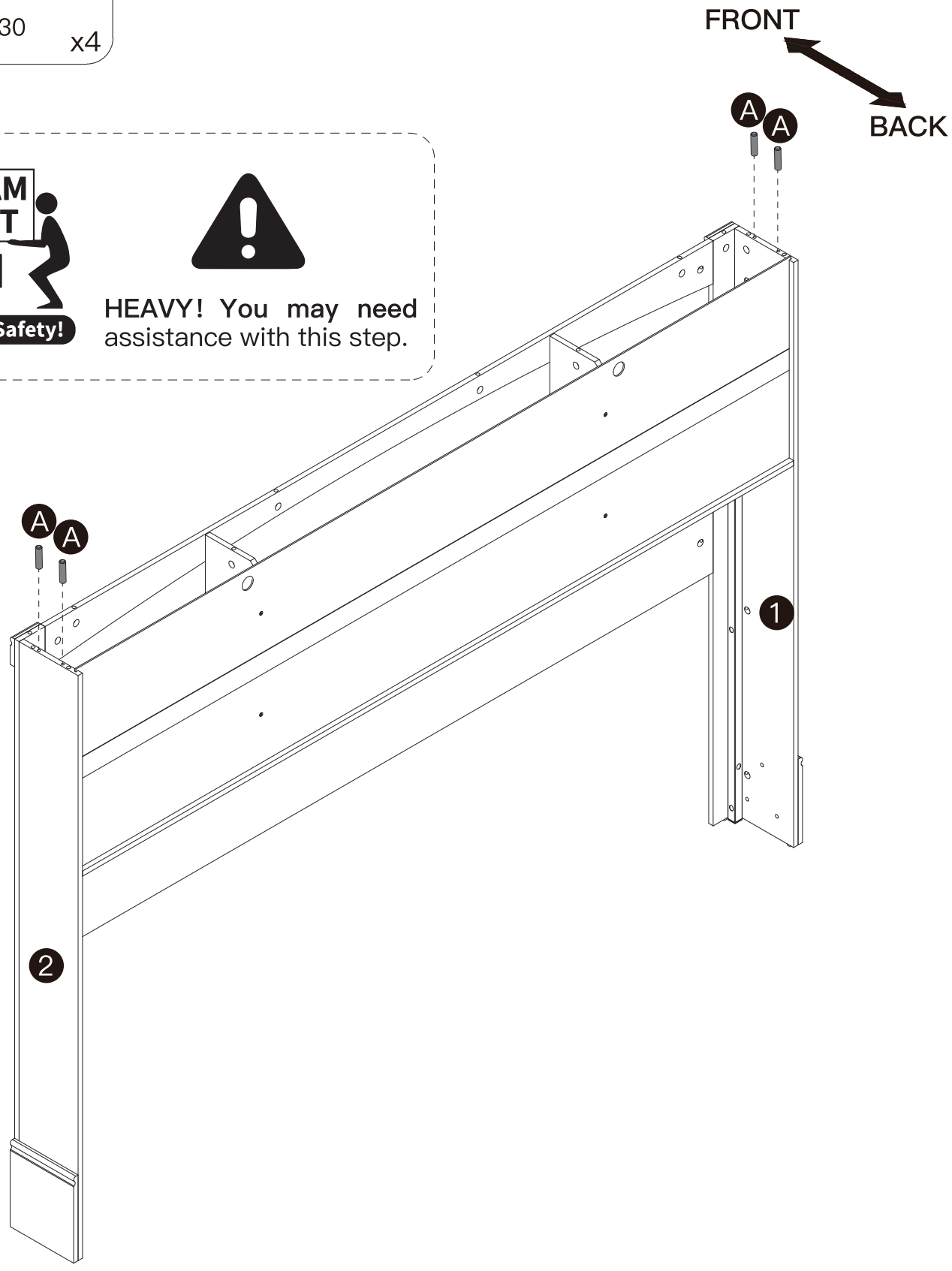

STEP 18

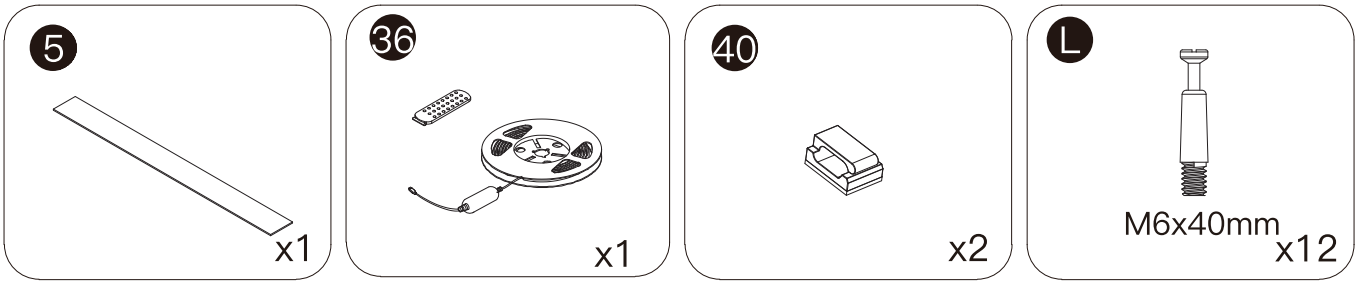

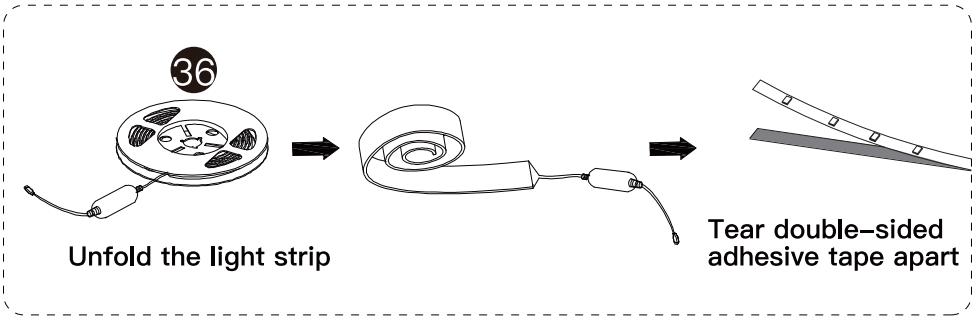

NOTICE:

Please be careful not to tear off the adhesive surface, when removing the double-sided tape.

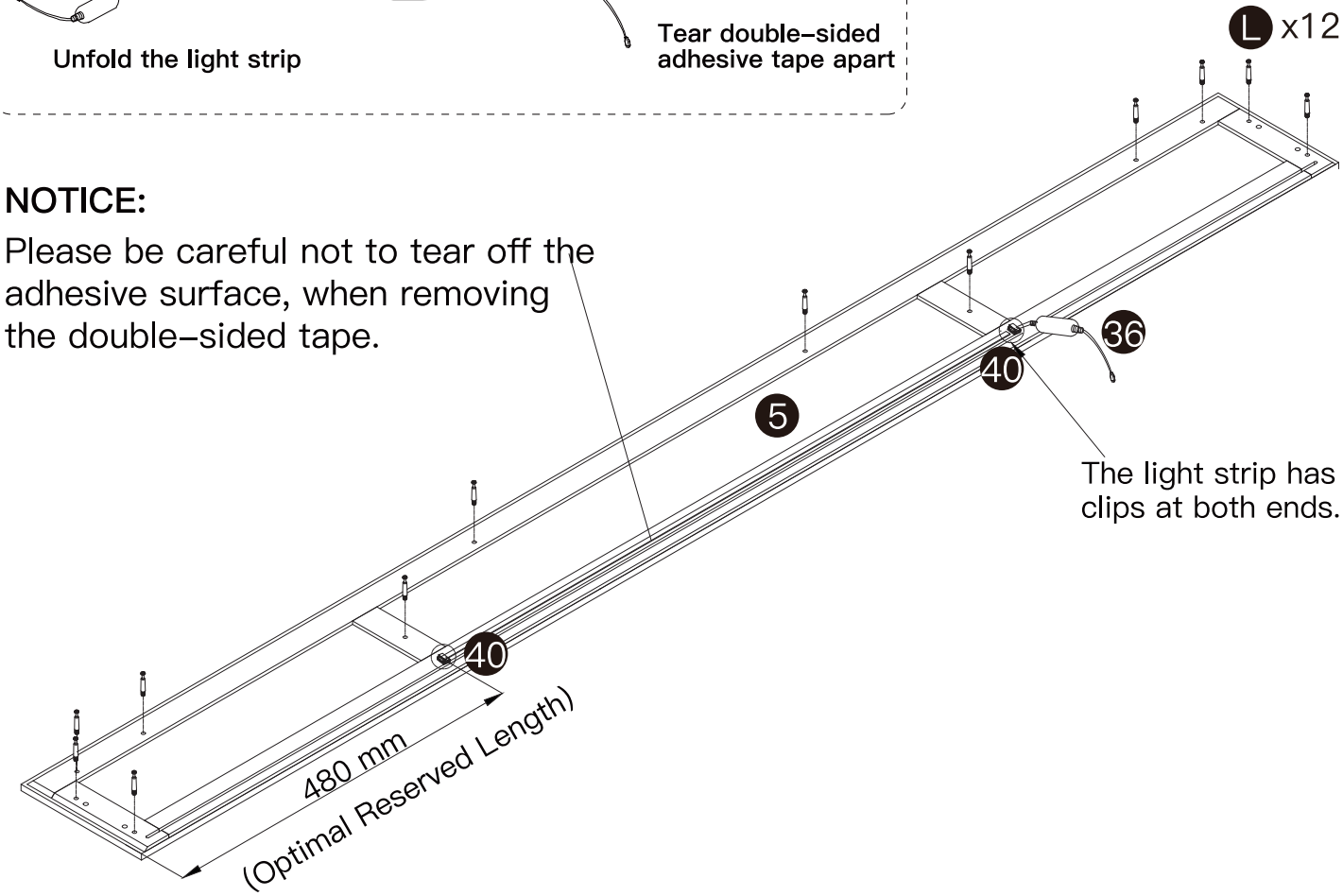

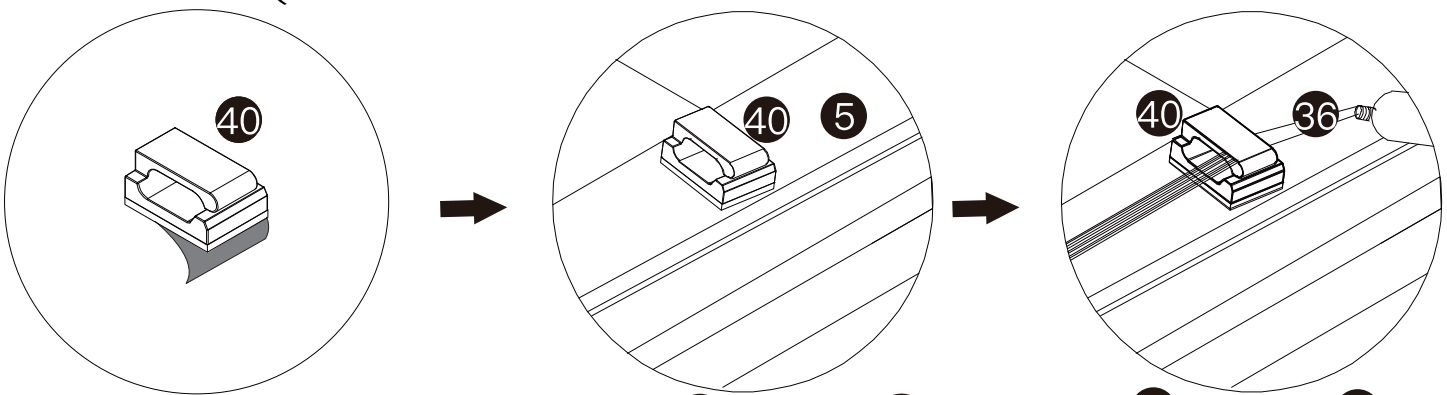

Peel off the protective film from the back of part 40 .

Stick part 40 onto part 5.

Stuff part 36 into part 40 .

STEP 19

Ⓜ



Ø15x10 x12

FRONT

BACK

NOTICE:

(1) Please first thread the light strip cable through the circular hole on part 16 .

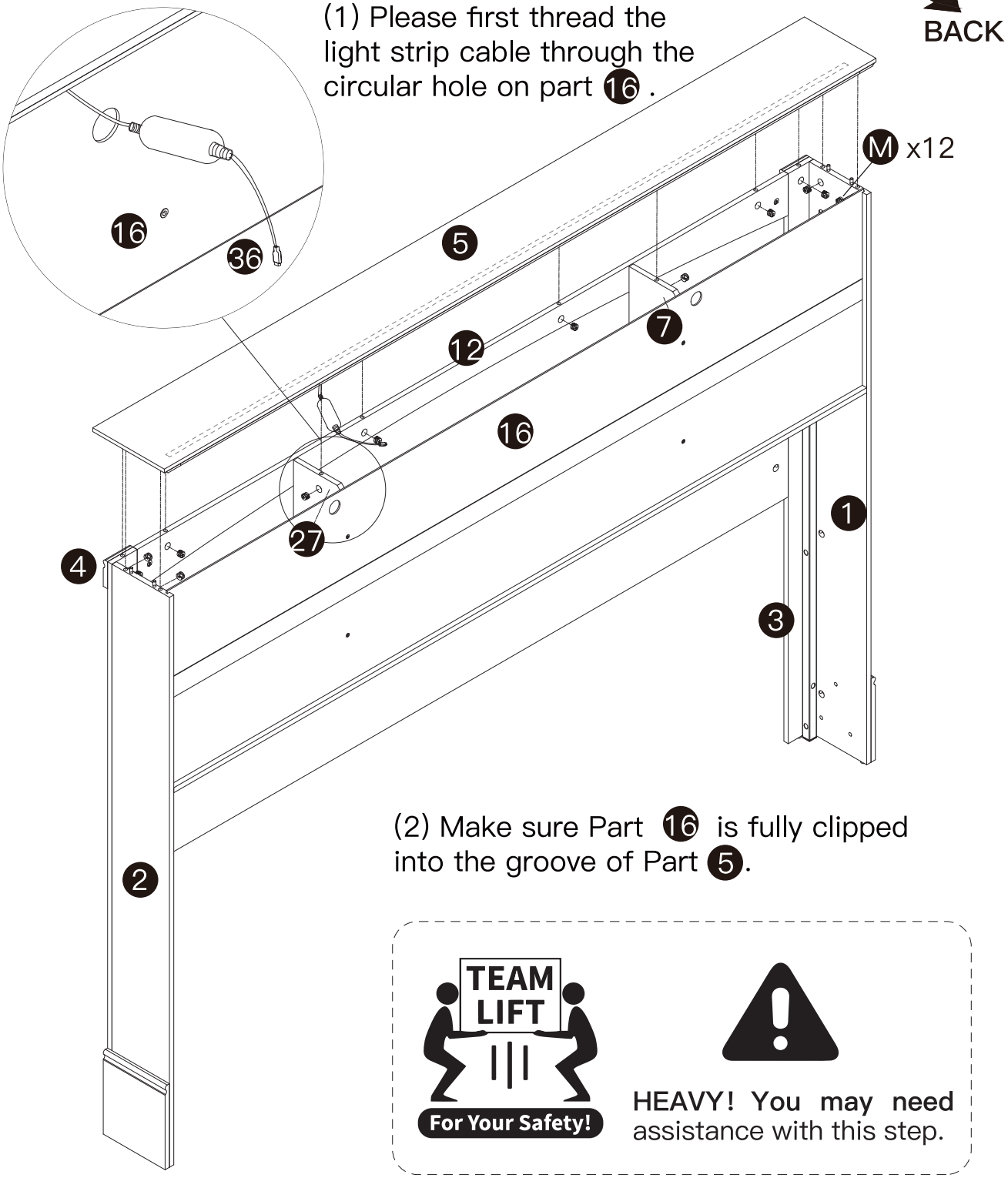

(2) Make sure Part 16 is fully clipped into the groove of Part 5.

HEAVY! You may need assistance with this step.

STEP 20

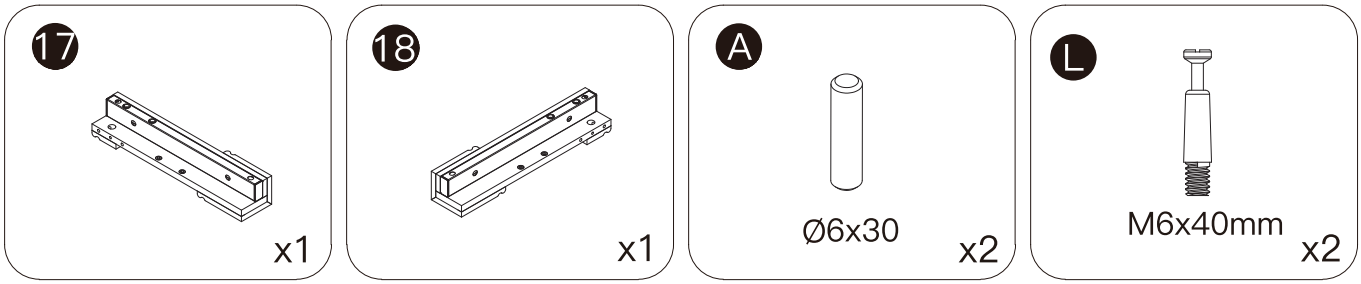

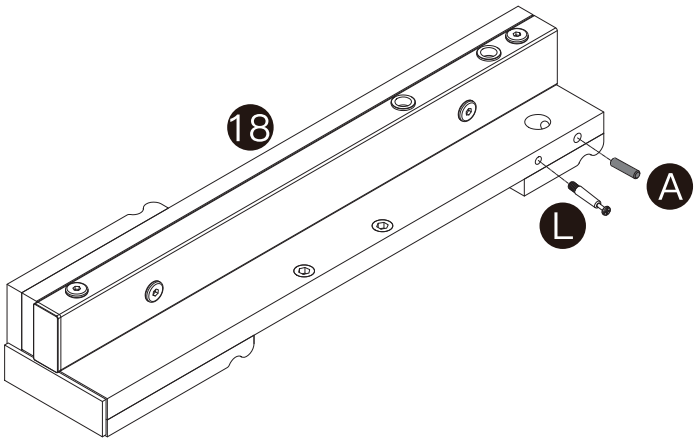

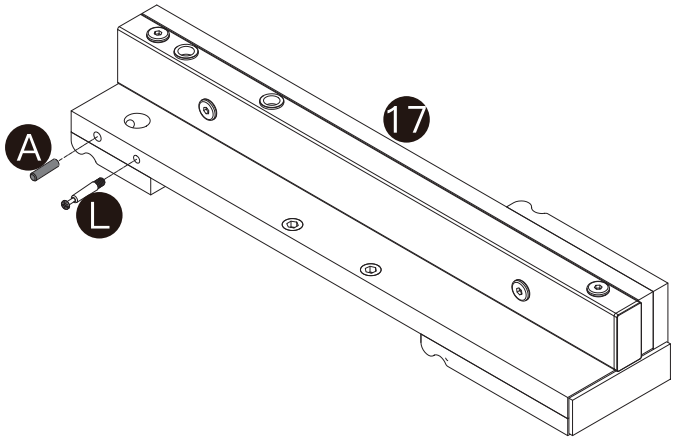

STEP 21

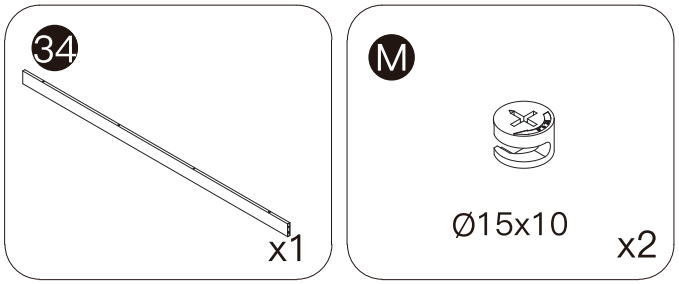

NOTICE:
Please ensure Part 34 is positioned correctly before installation, as shown in the figure below.

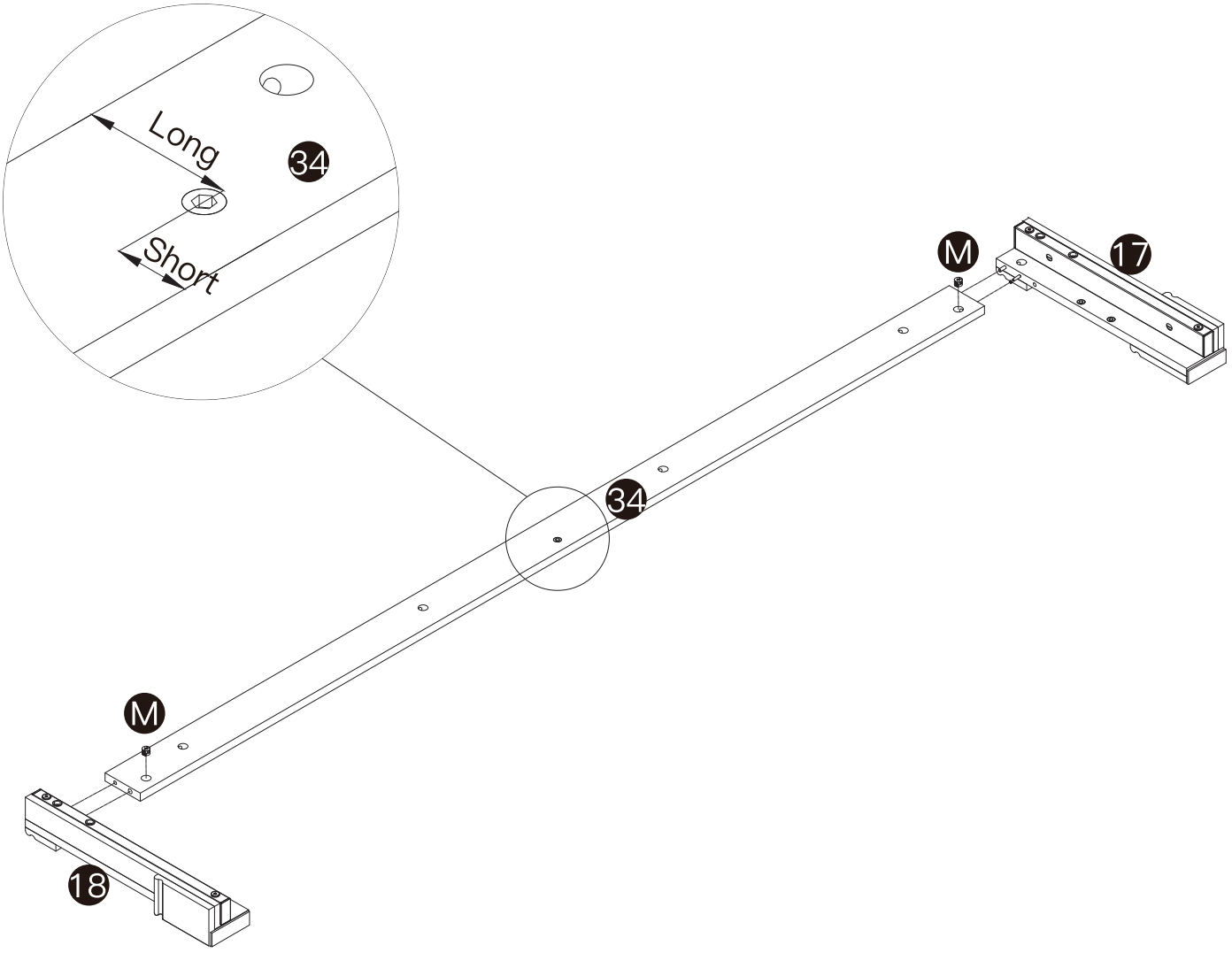

STEP 22

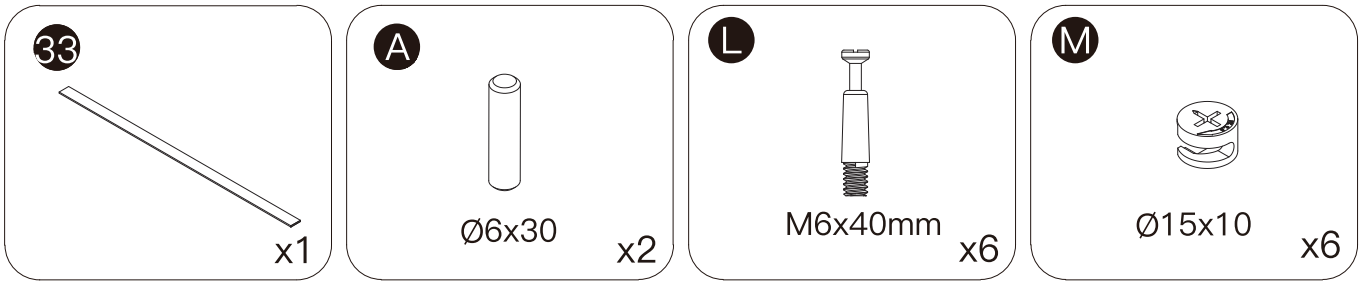
33
x1
A
Ø6x30
x2
L
M6x40mm
x6
M
Ø15x10
x6

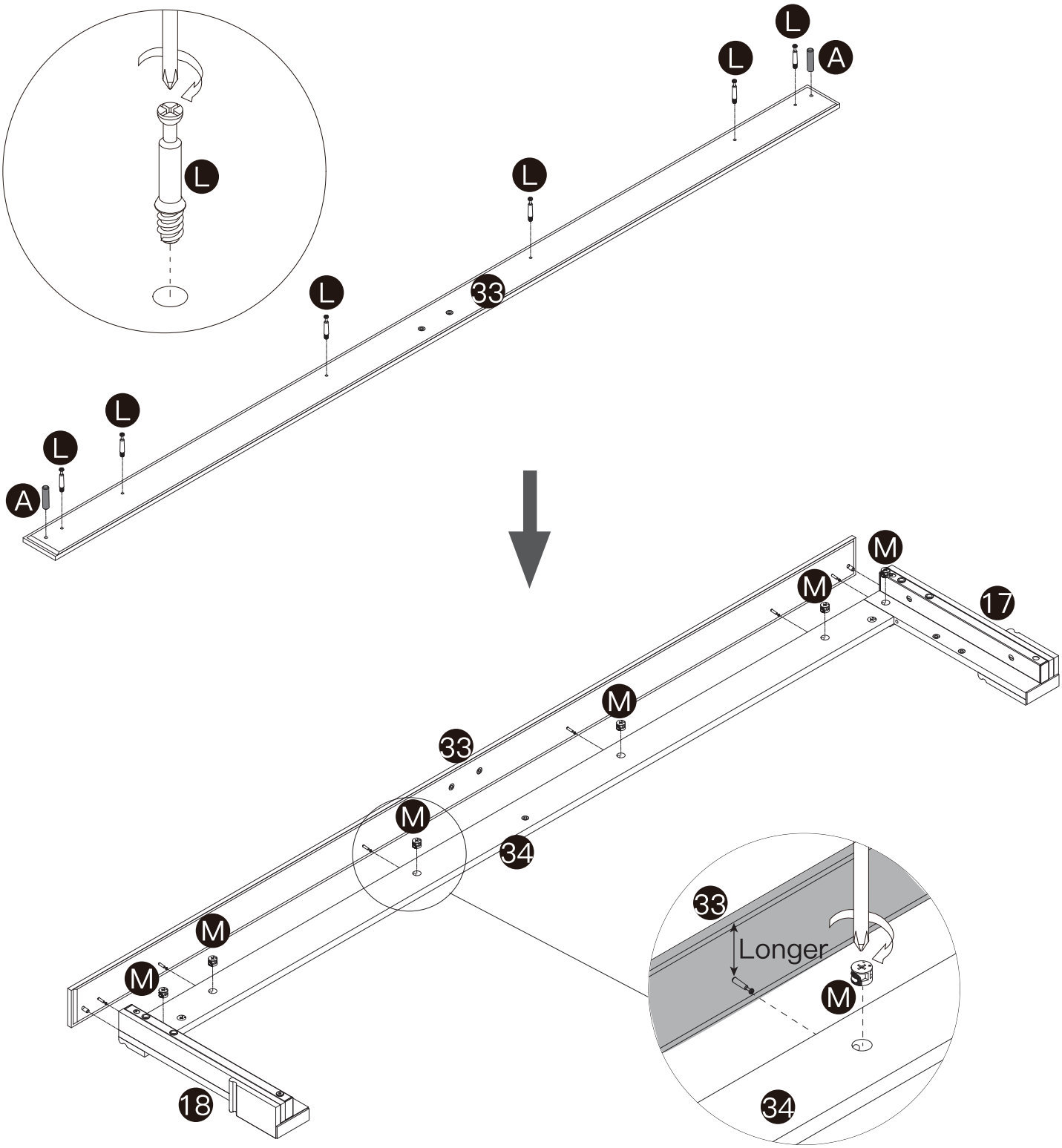
L
L
A
L
L
33
L
L
L
A
M
M
17
M
33
M
34
M
M
18
33
Longer
M
34

STEP 23

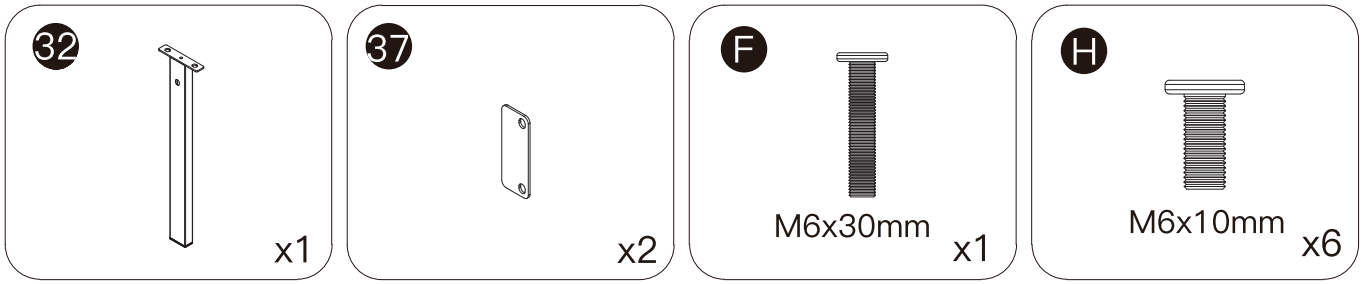
32
x1
37
x2
F
M6x30mm
x1
H
M6x10mm
x6

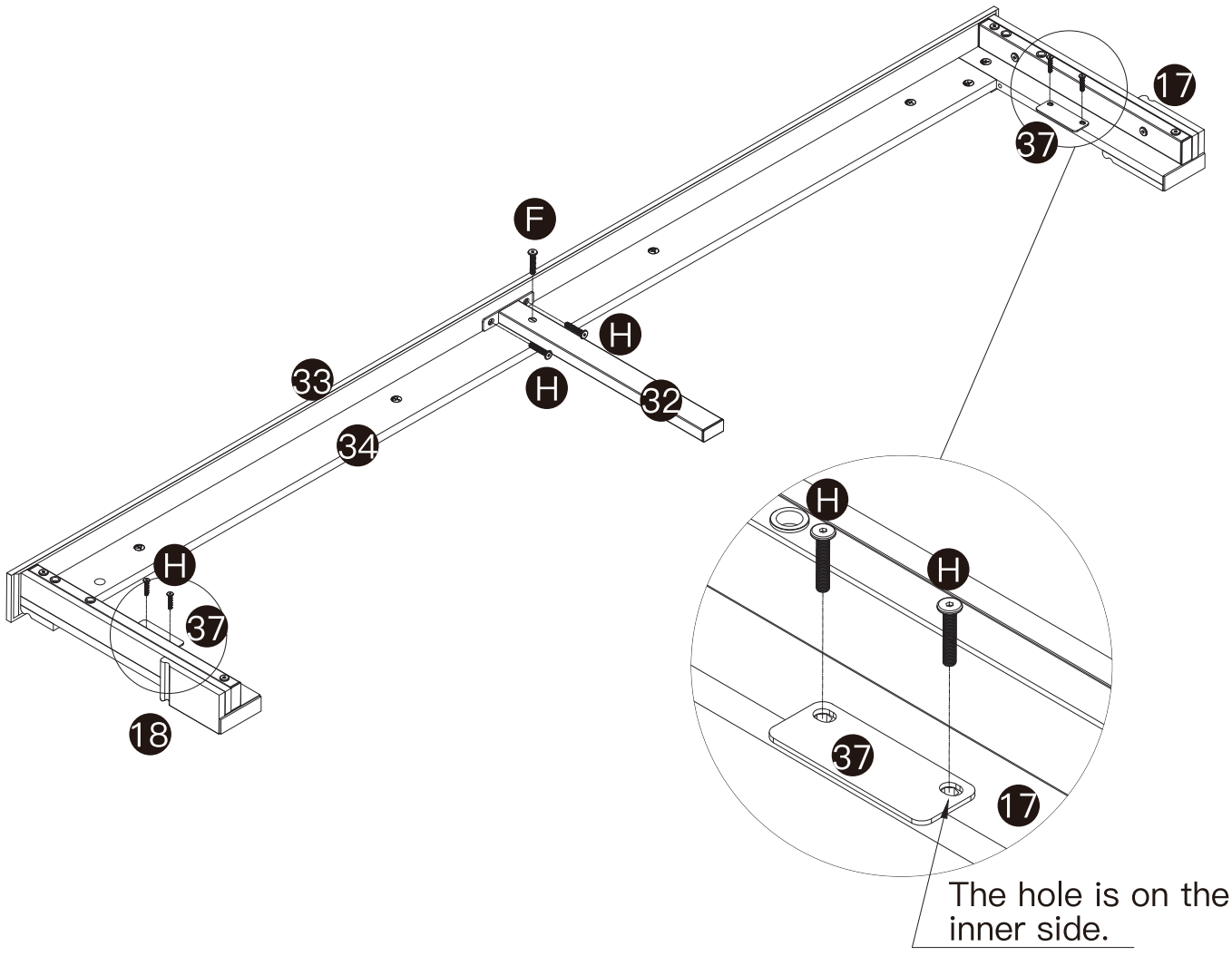
17
37
F
H
H
33
32
34
H
37
18
H
H
37
17
The hole is on the inner side.

STEP 24

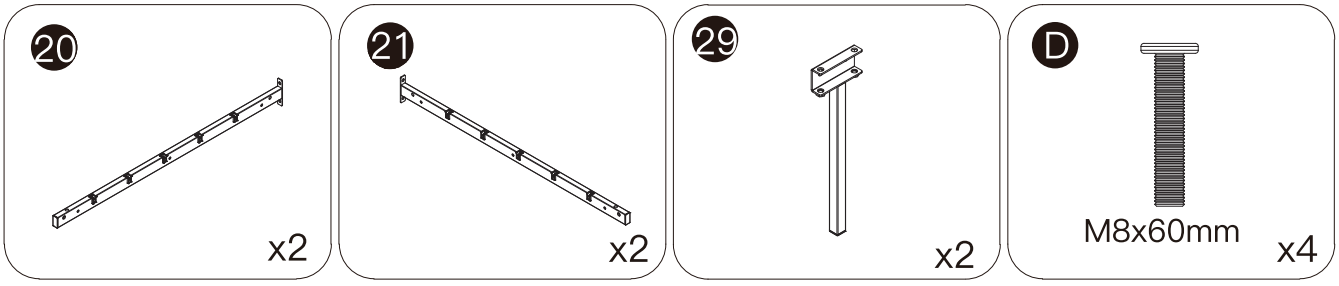

NOTICE:

Please install parts 20 , 21 and 29 as shown in the figure below.

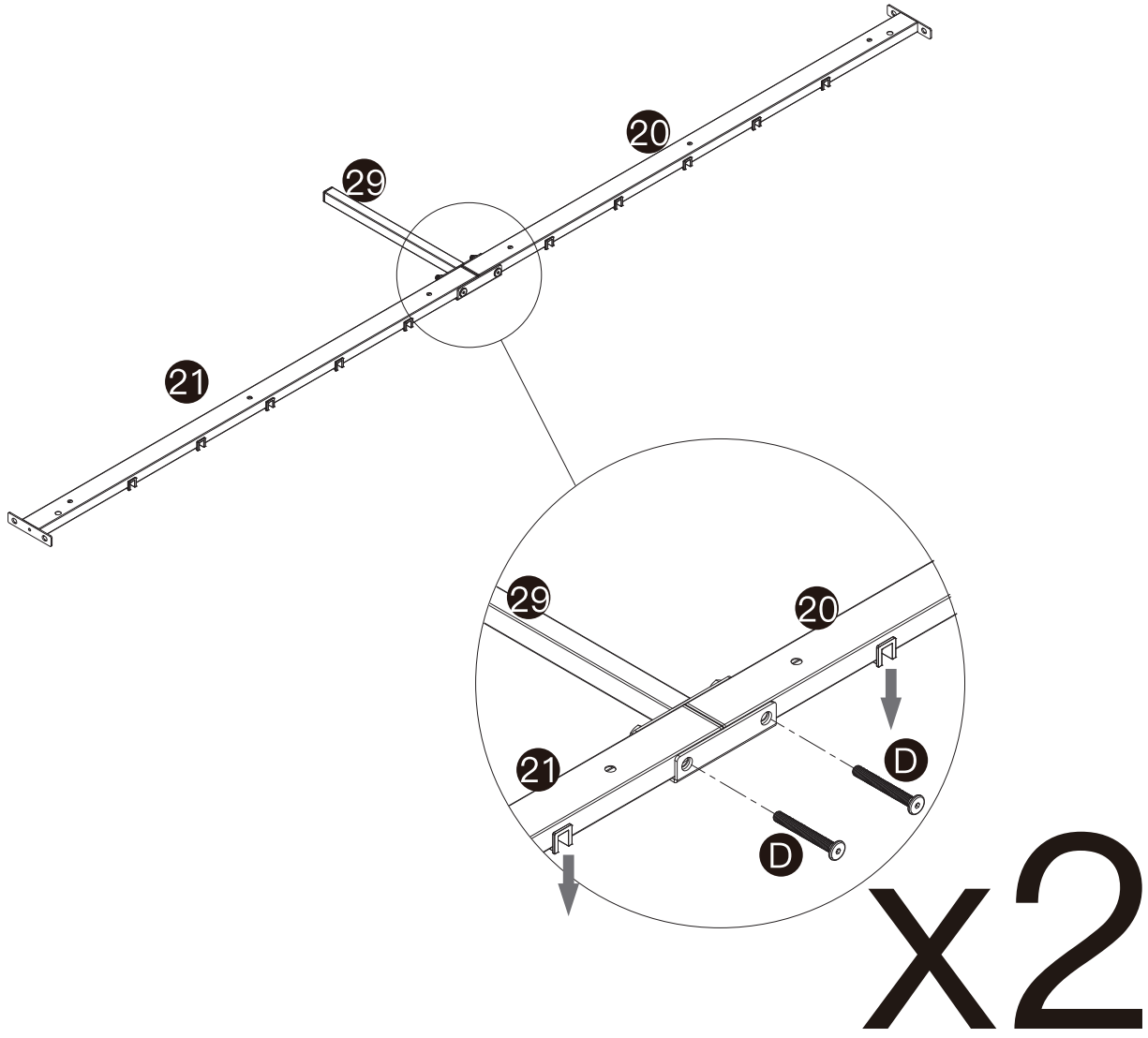

STEP 25

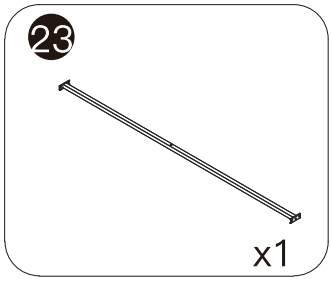

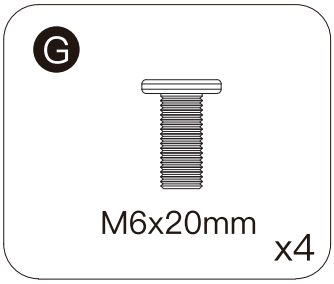



HEAVY! You may need assistance with this step.

NOTICE:

(1) Please ensure that the holed side of part 23 faces upward.

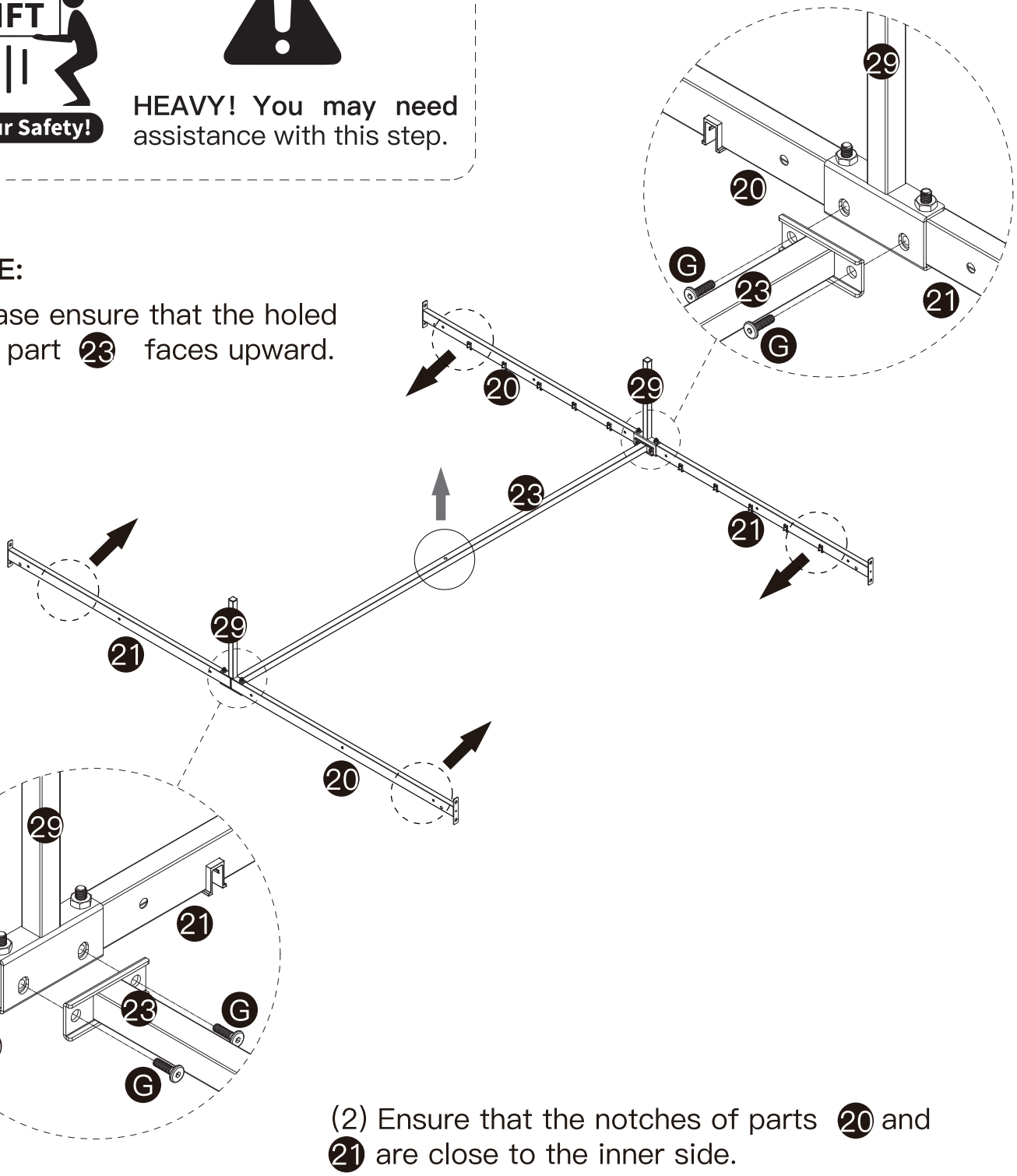

(2) Ensure that the notches of parts 20 and 21 are close to the inner side.

STEP 26

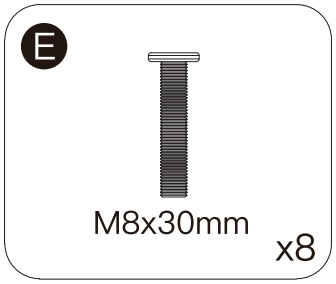

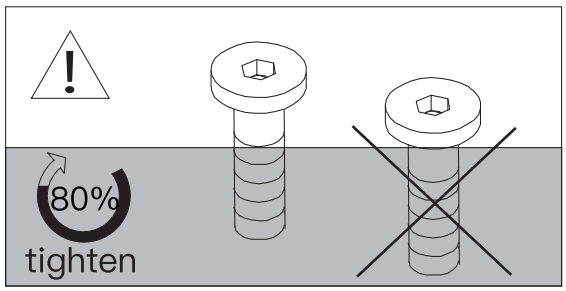



NOTICE:

Do not fully tighten the screws until part 25 has been completely installed.

STEP 27

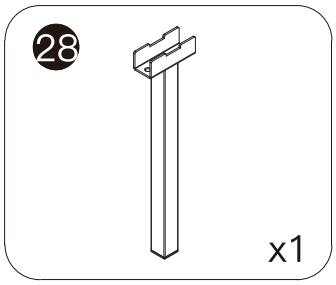

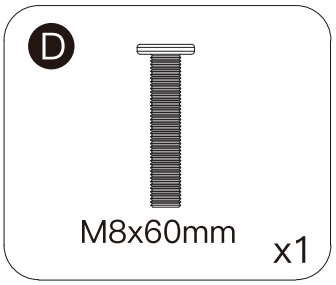

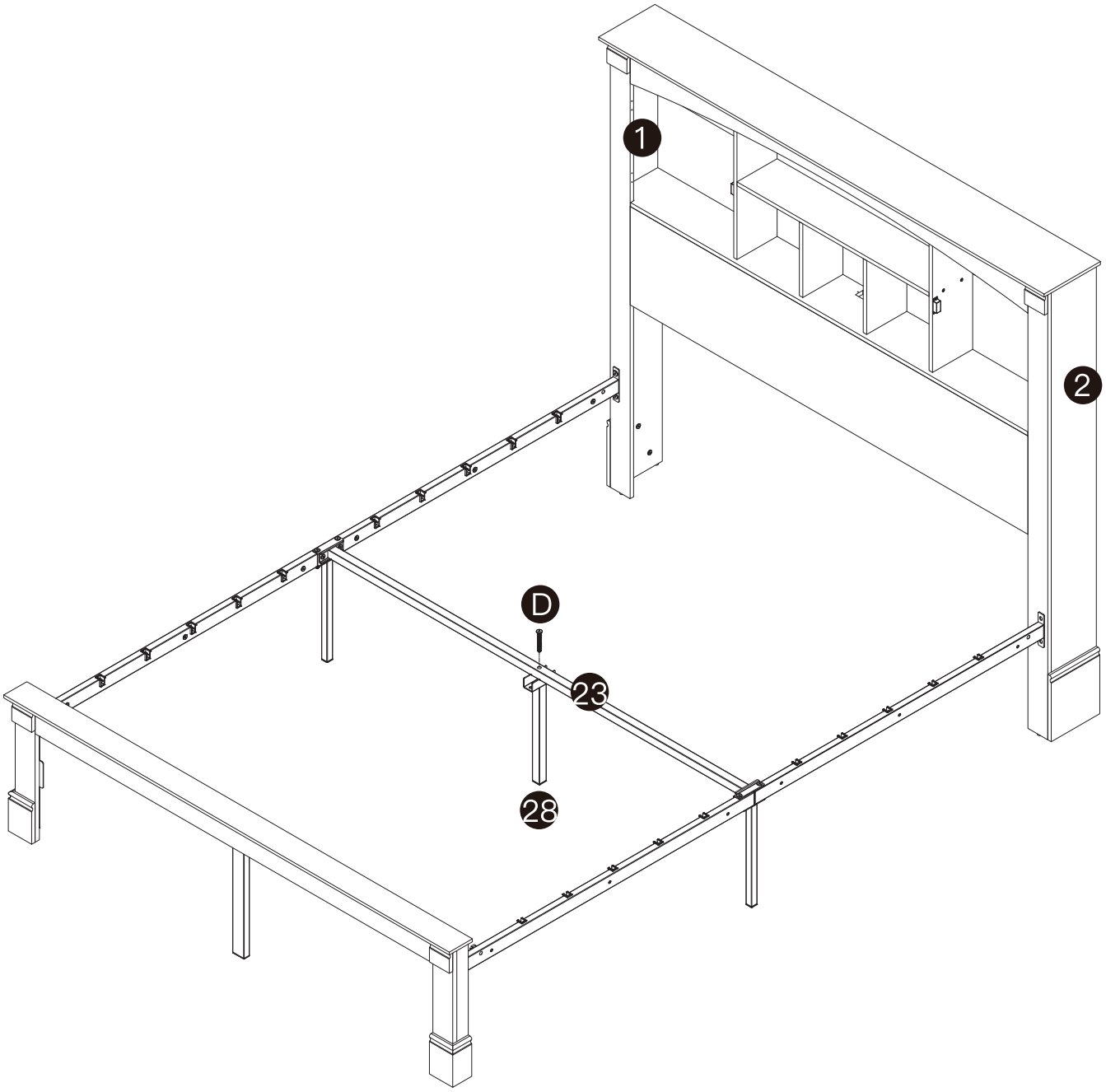

STEP 28

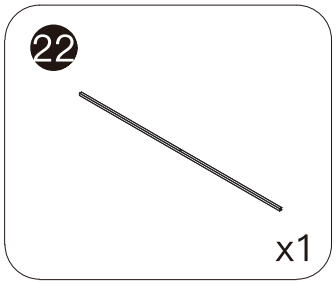

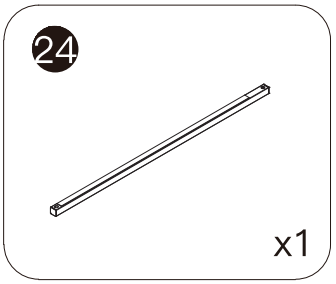

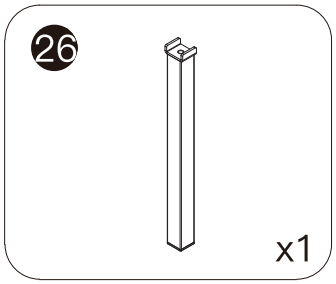

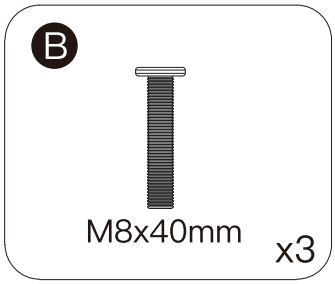

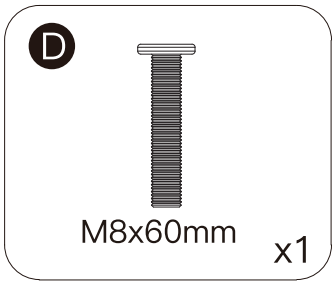

(2) Please ensure the side of part 24 with the silent strip faces upward.

NOTICE:

(1) If part 22 is hard to install here, slightly loosen the screws on both sides. **Do not** let the screws fall off.

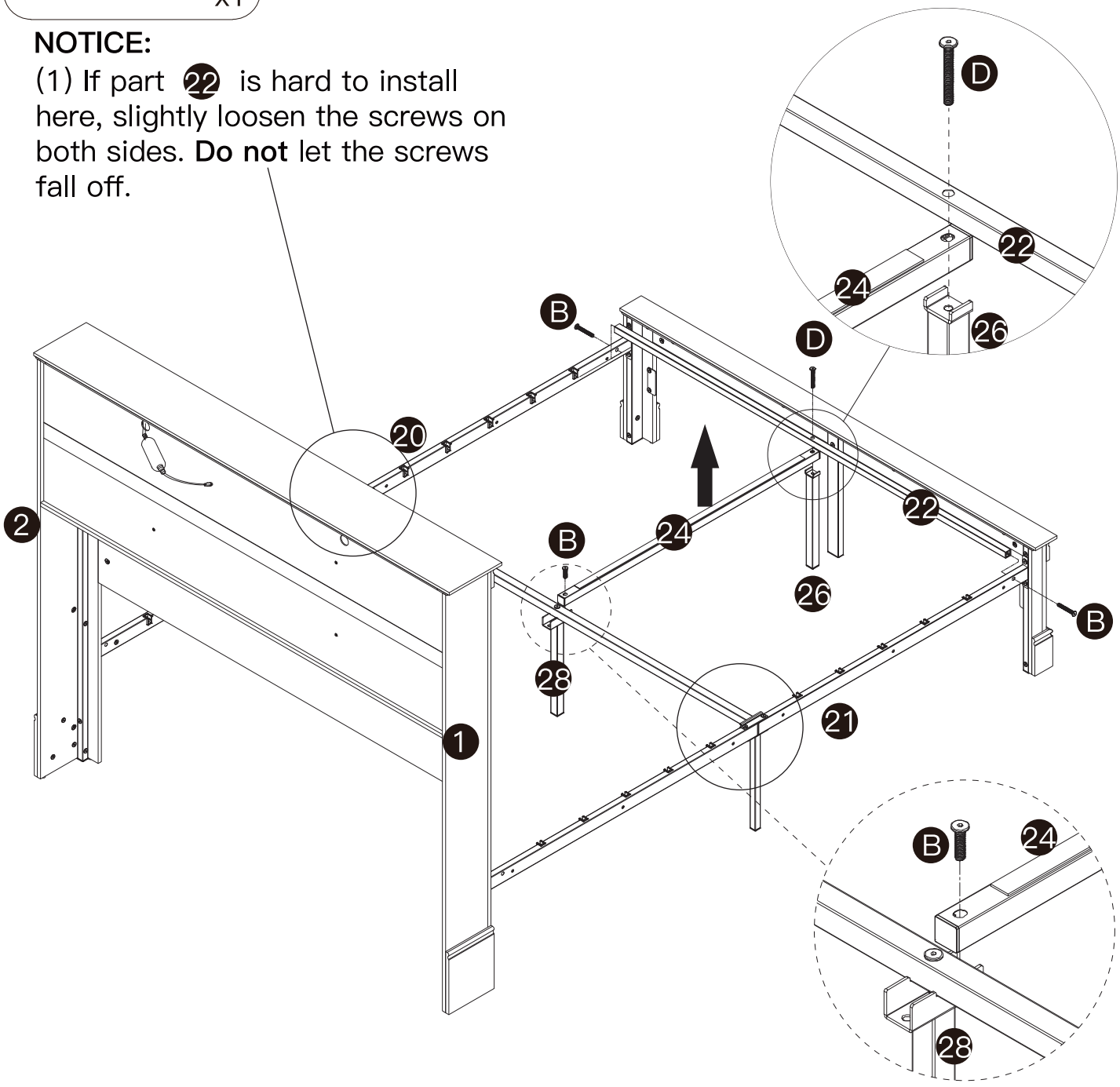

STEP 29

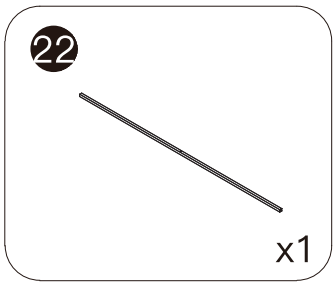

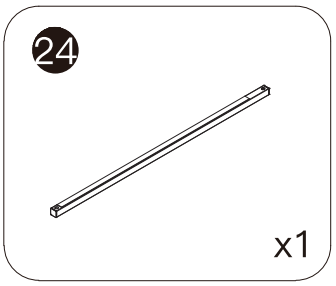

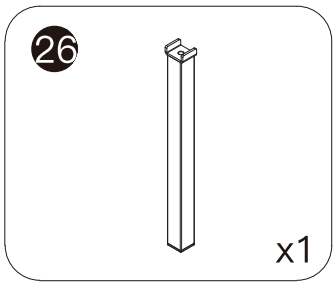

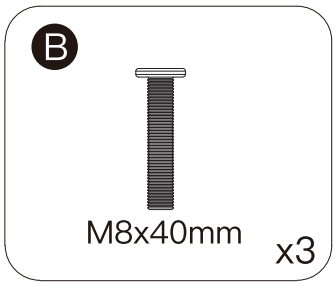

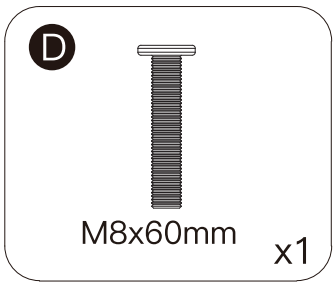

NOTICE:

Please ensure the side of part 24 with the silent strip faces upward.

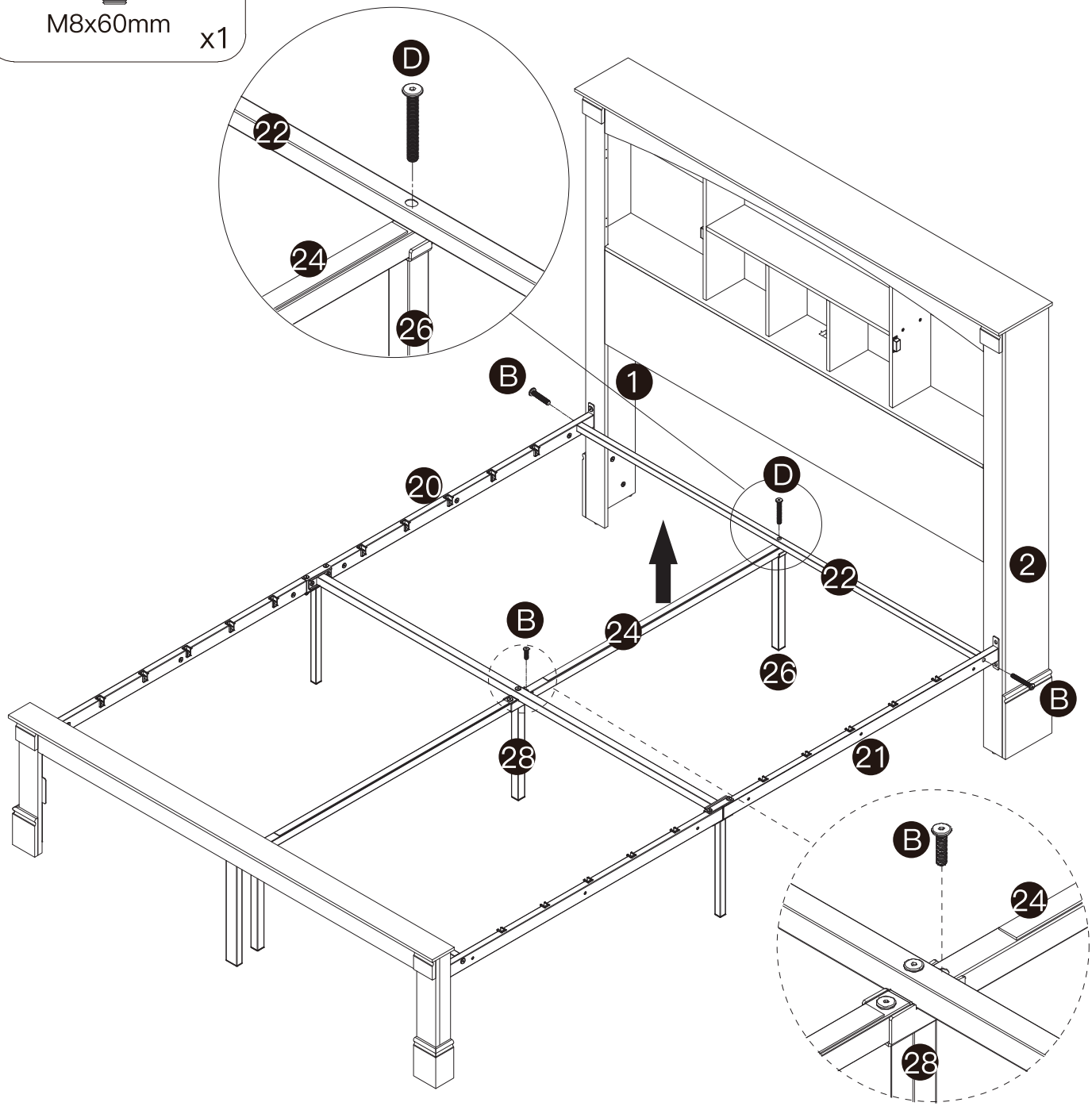

STEP 30

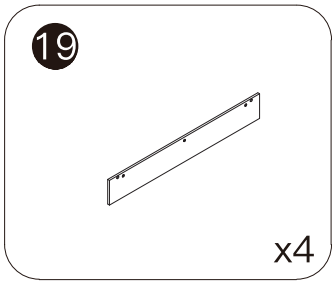

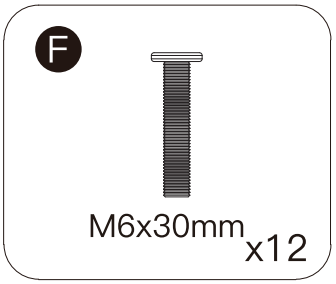

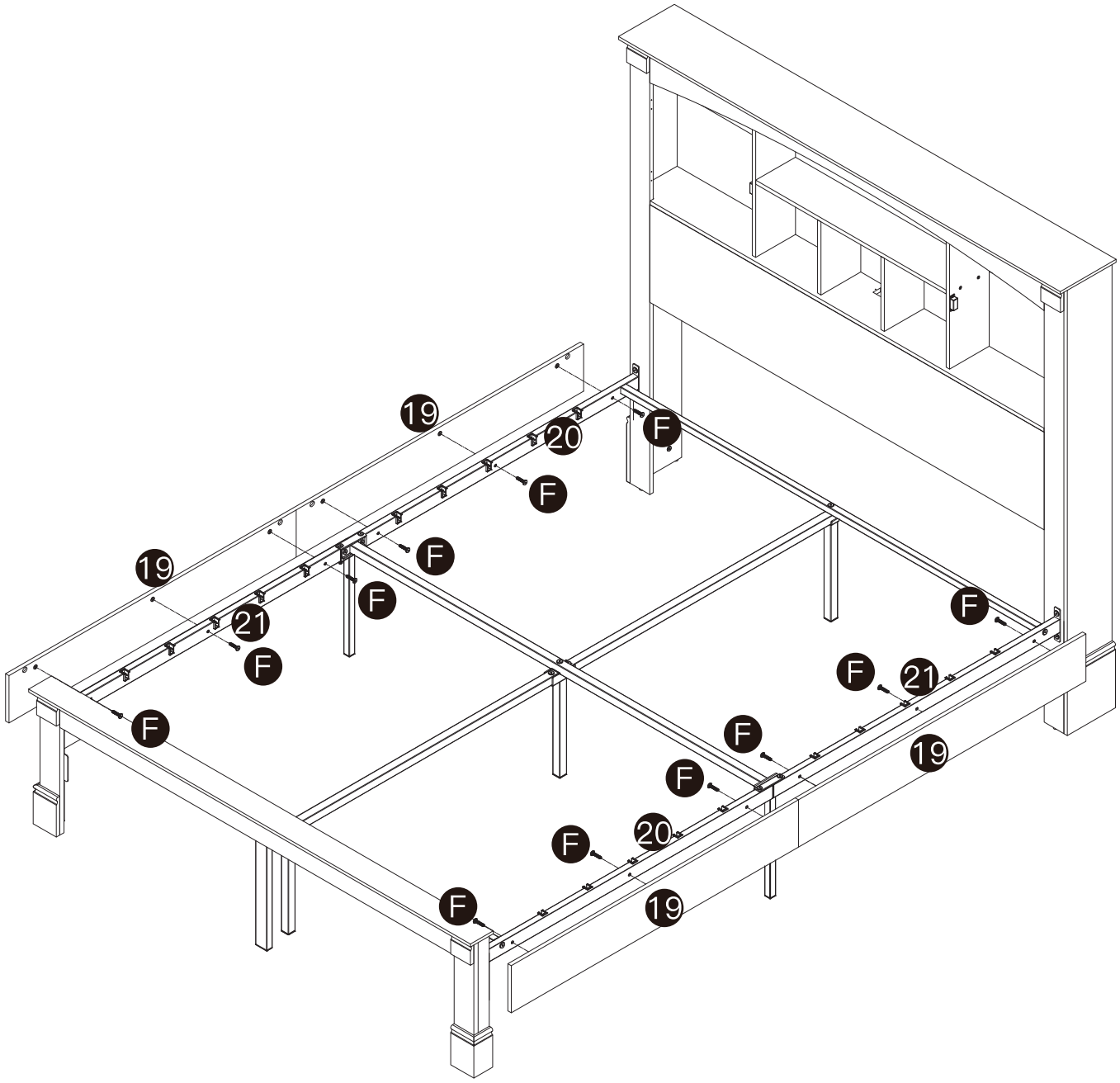

STEP 31

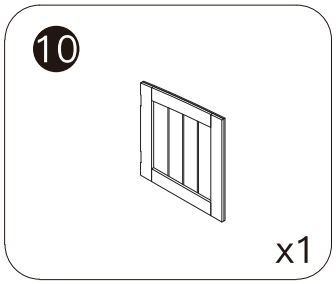
10
x1

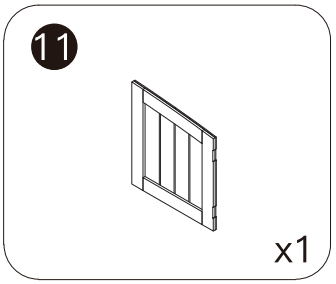
11
x1

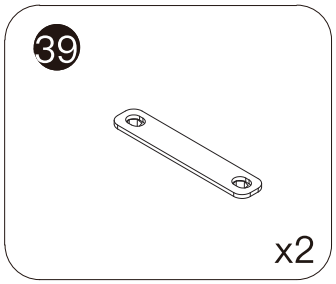
39
x2

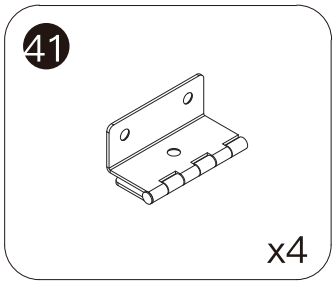
41
x4

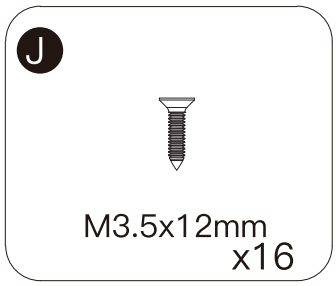
J
M3.5x12mm
x16

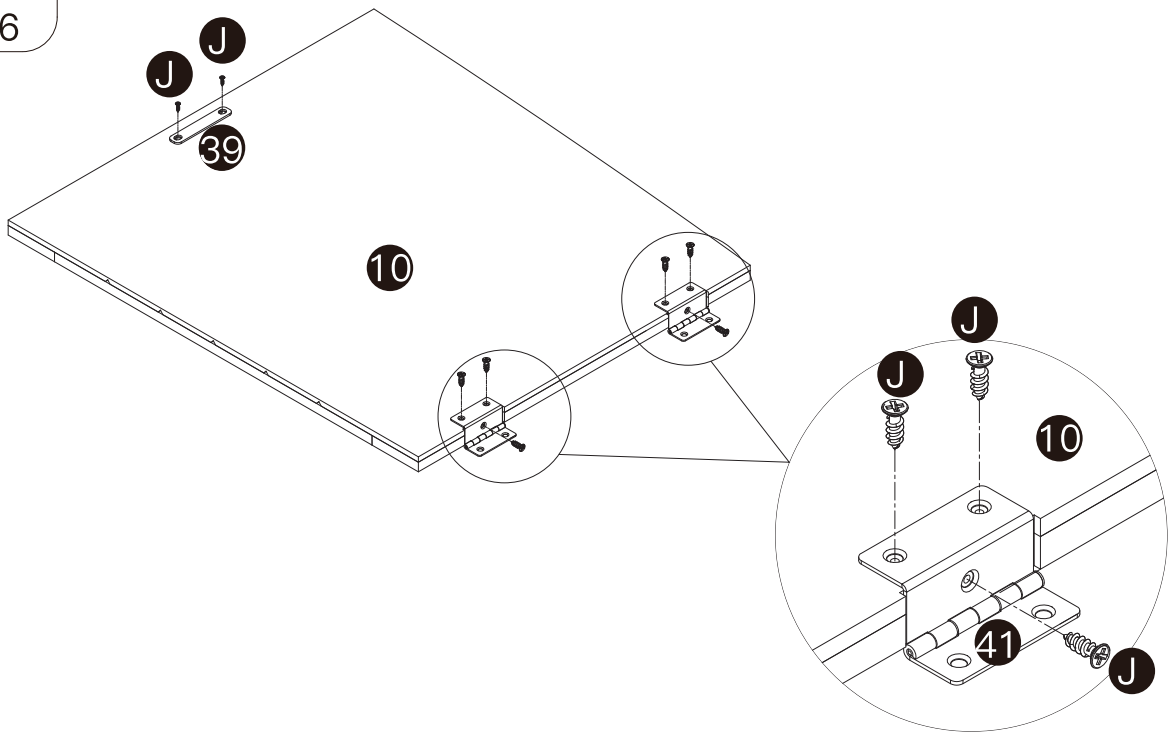
J
J
39
10
J
J
10
41
J

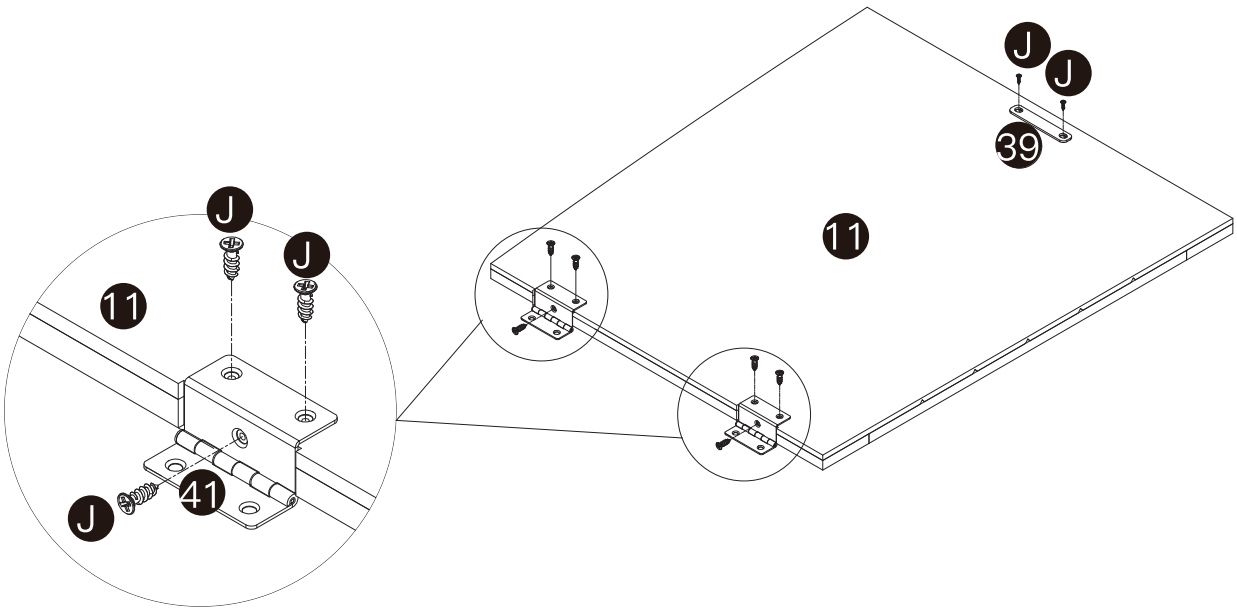
J
J
39
11
J
J
11
41
J

STEP 32

J



M3.5x12mm
x8





HEAVY! You may need assistance with this step.

STEP 33

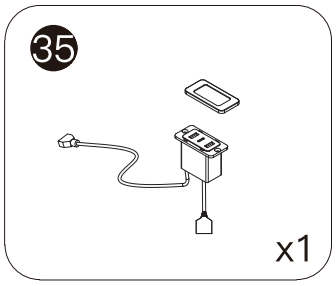

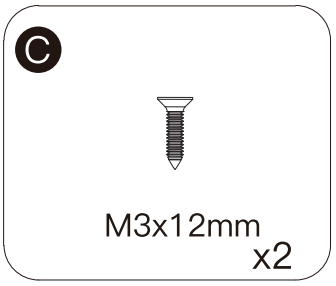

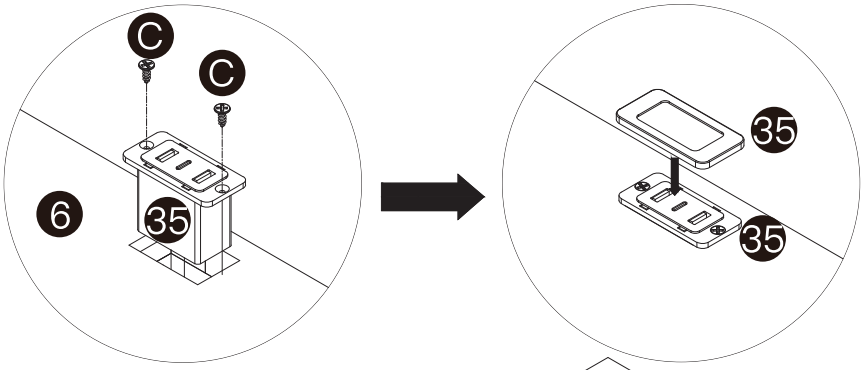

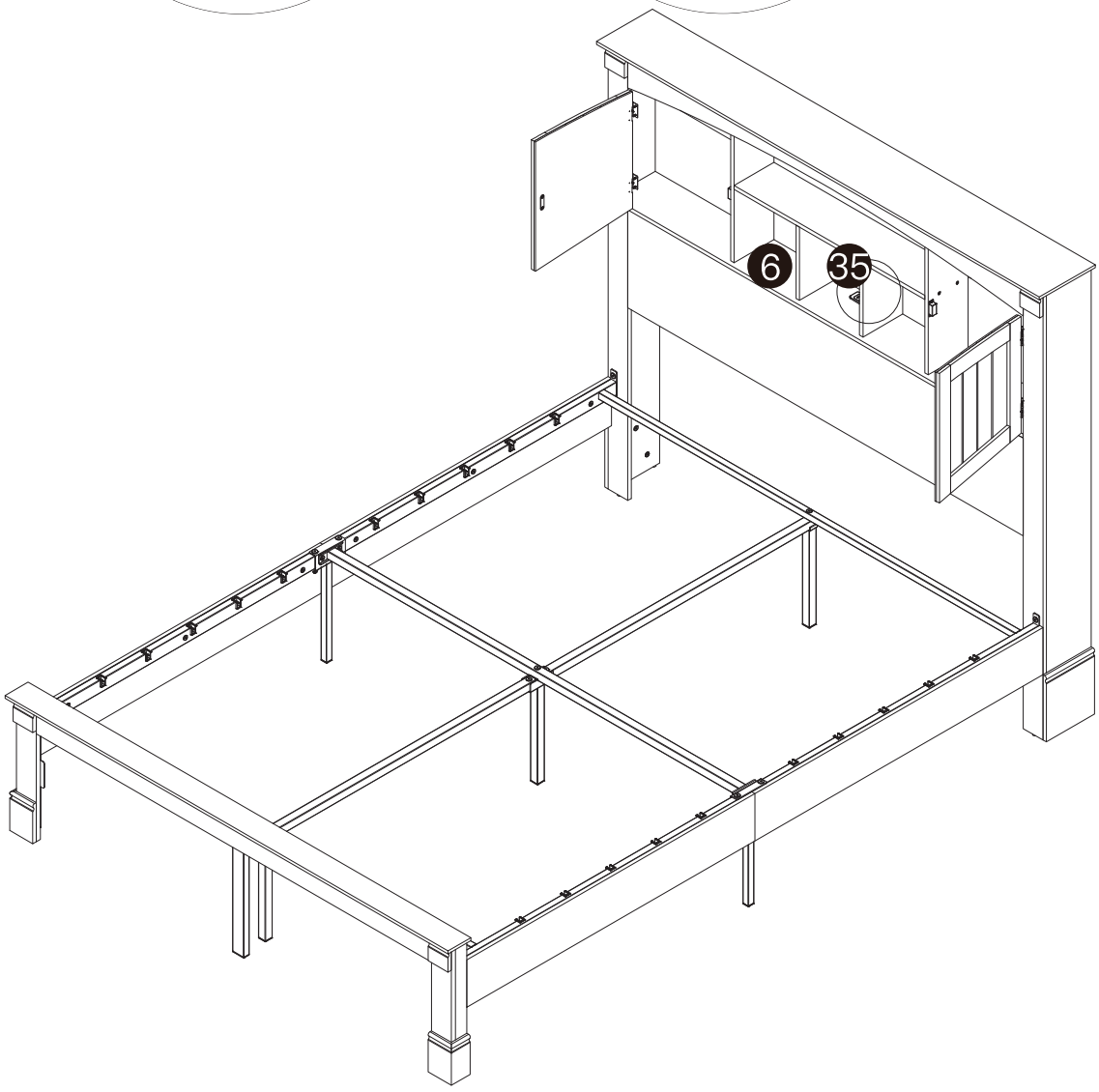

STEP 34

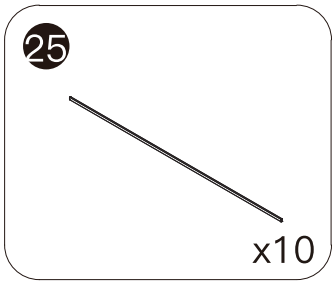

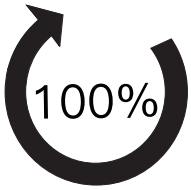

NOTICE:

Tighten all screws securely.

STEP 35

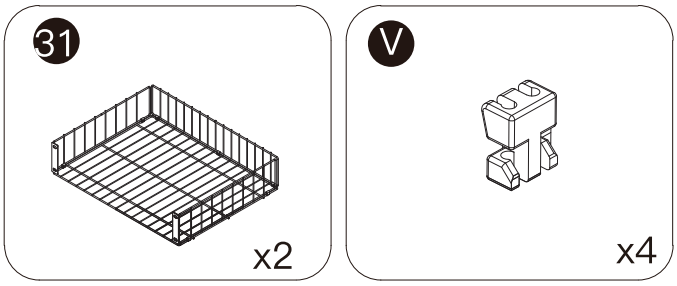

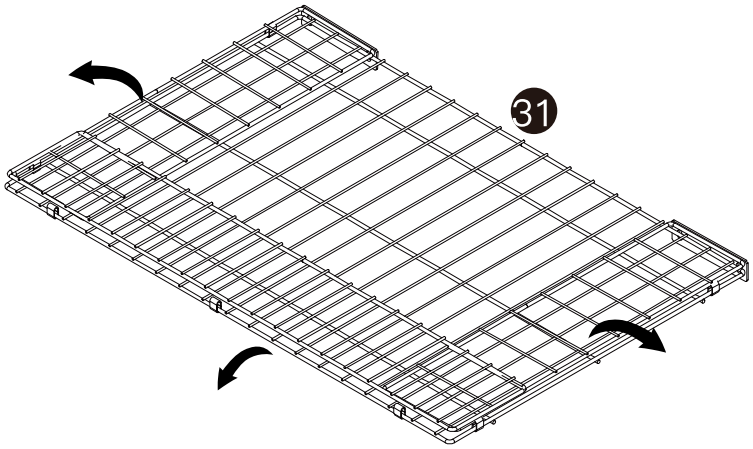

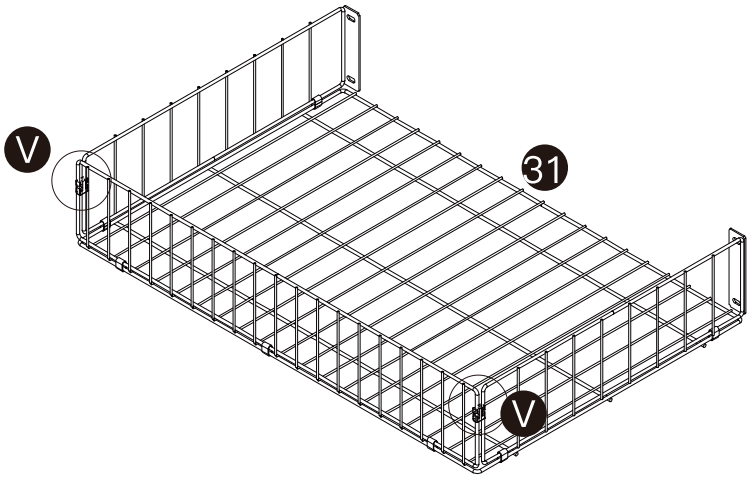

x2

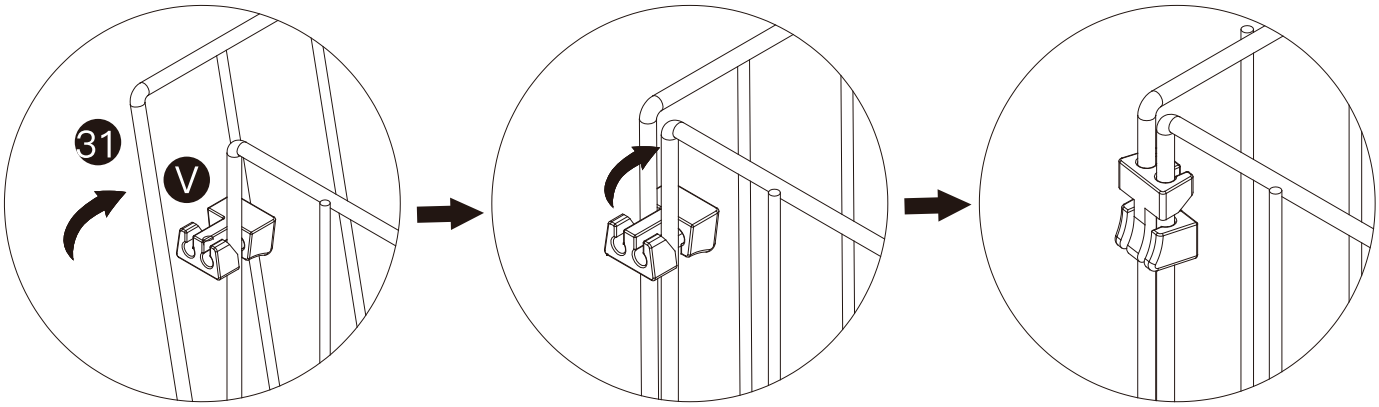

STEP 36

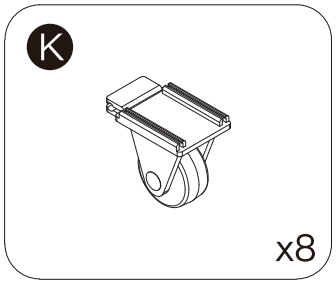

NOTICE:
Please install the wheels as shown above to get the maximum stability and moving smoothness.

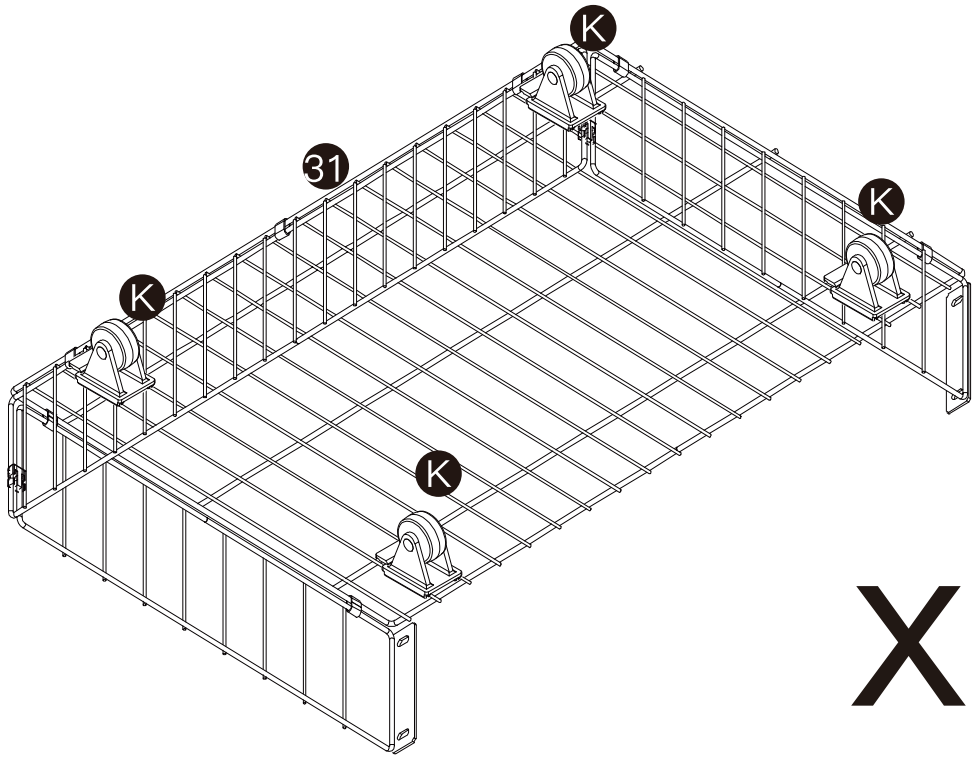

x2

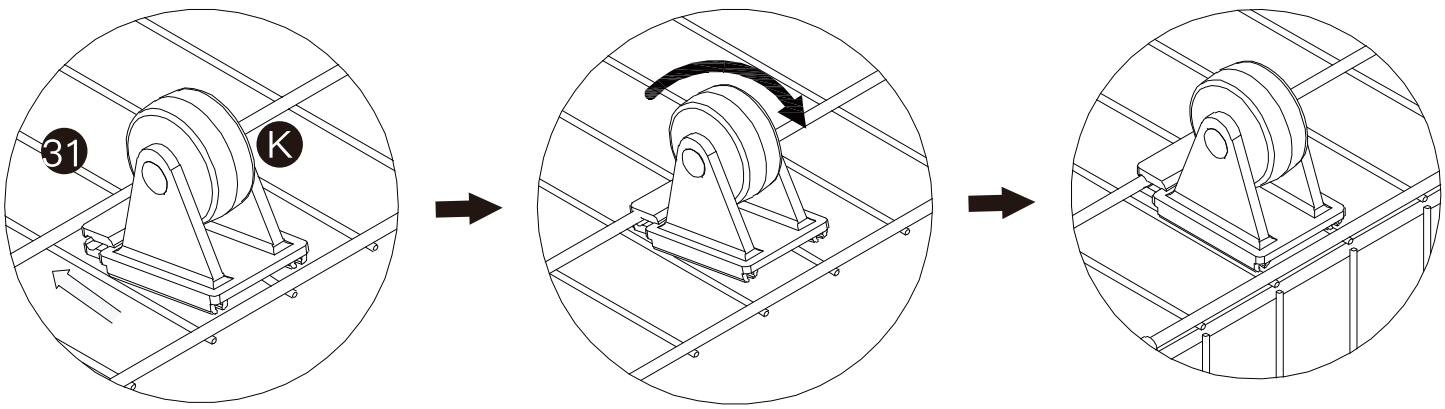

STEP 37

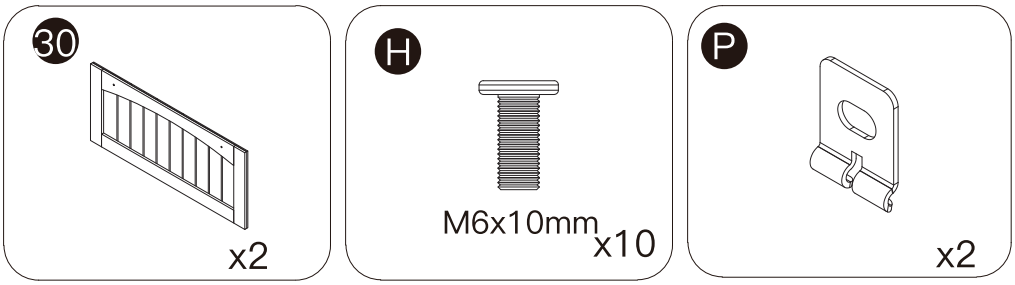

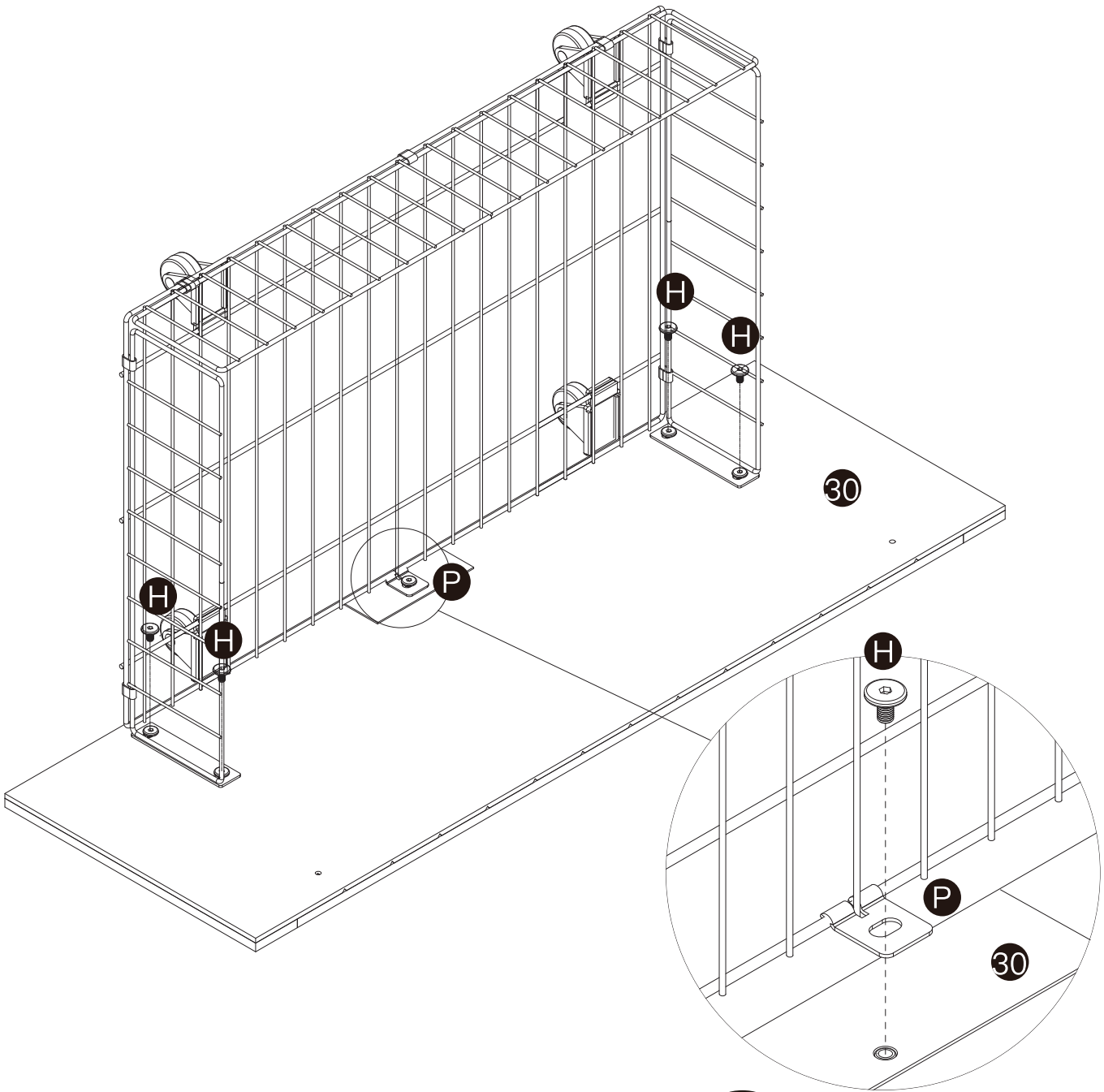

x2

STEP 38

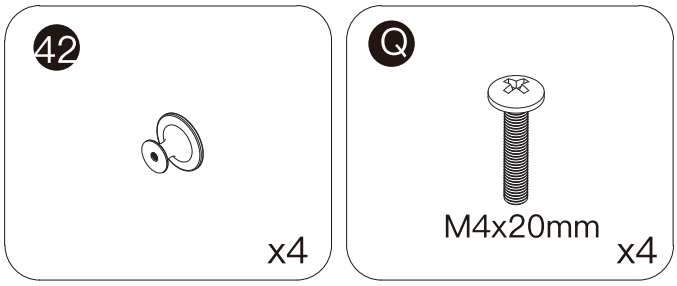

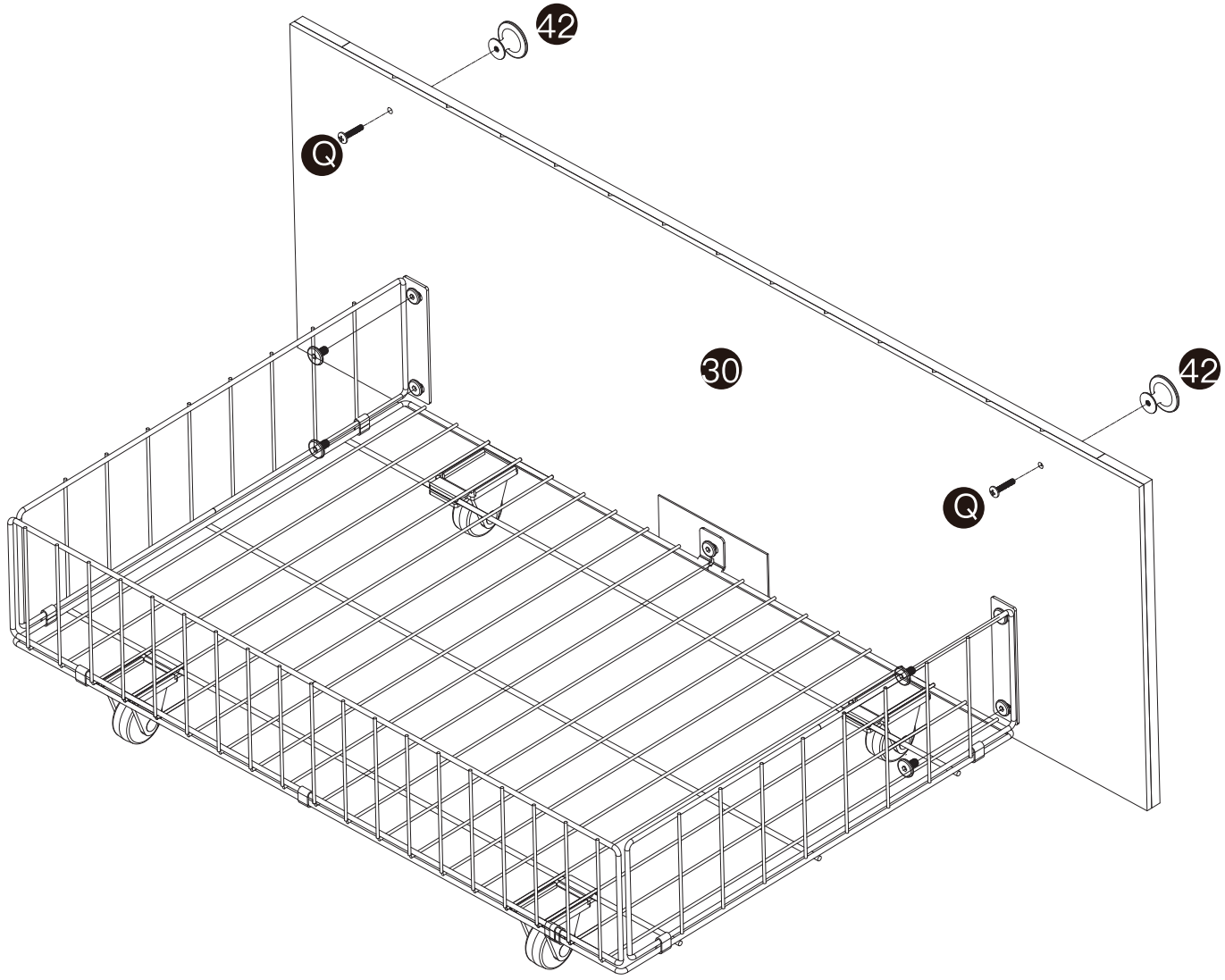

x2

STEP 39

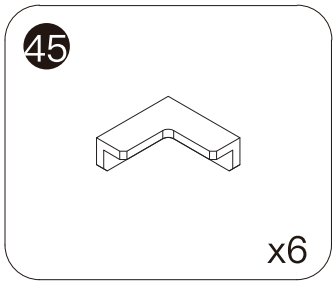

NOTICE:

Peel off the adhesive tape before installing part 45 .

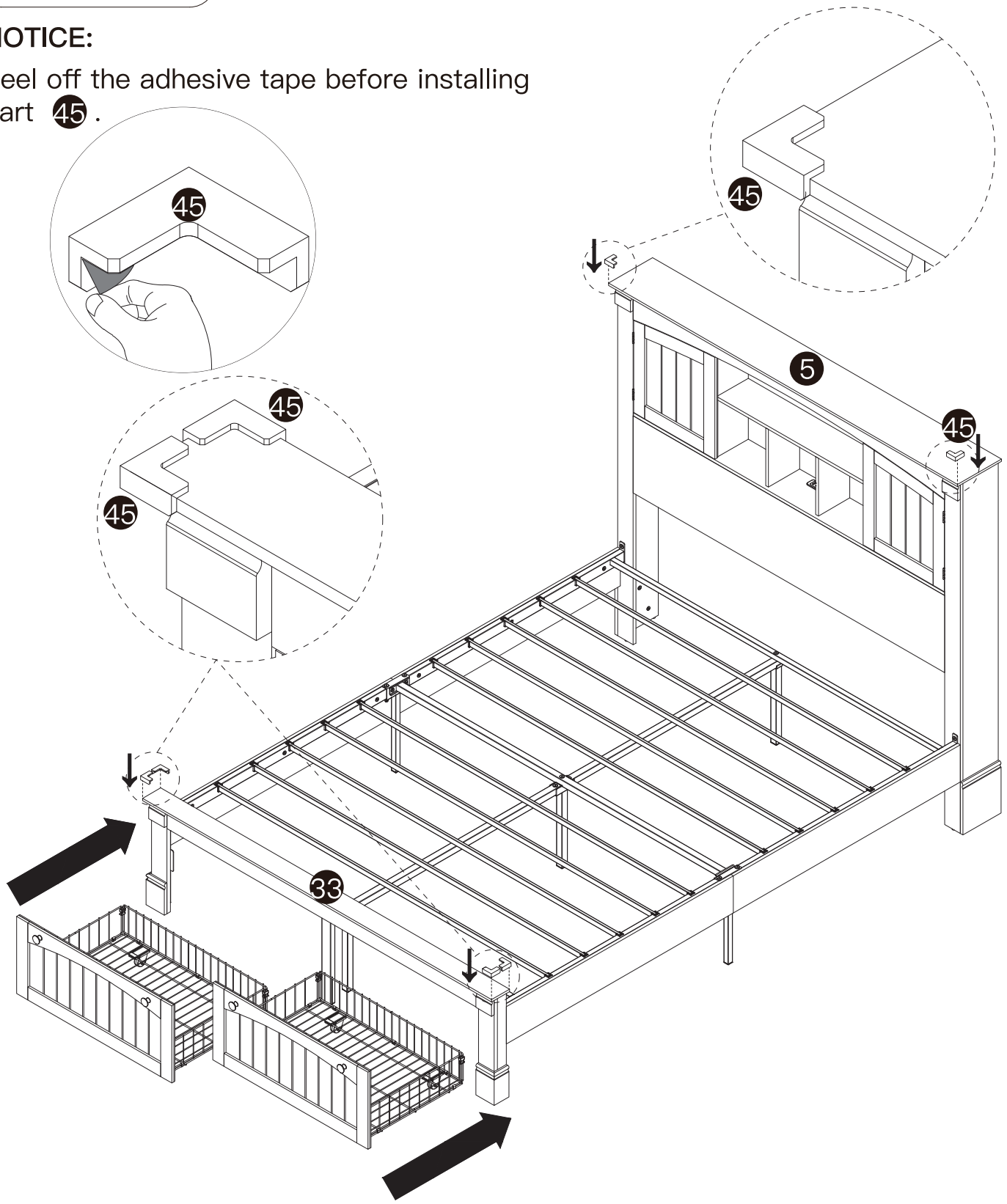

STEP 40

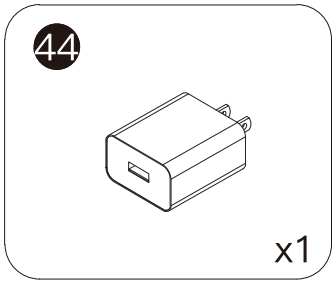

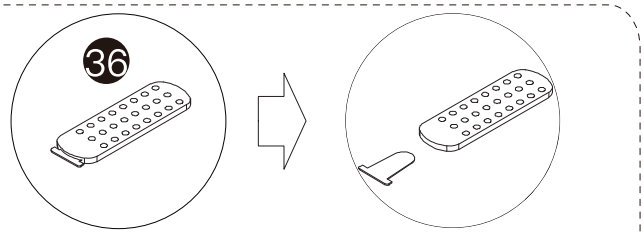

When you use the remote control board to control the color of the light, Please remove the clear plastic card.

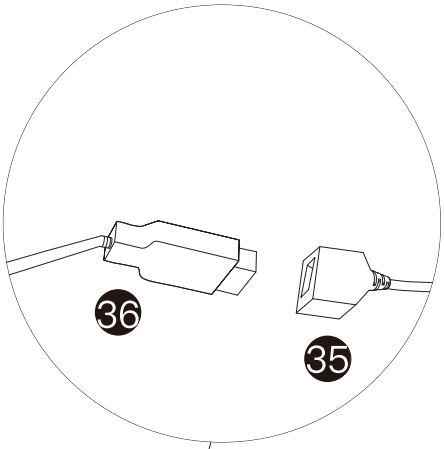

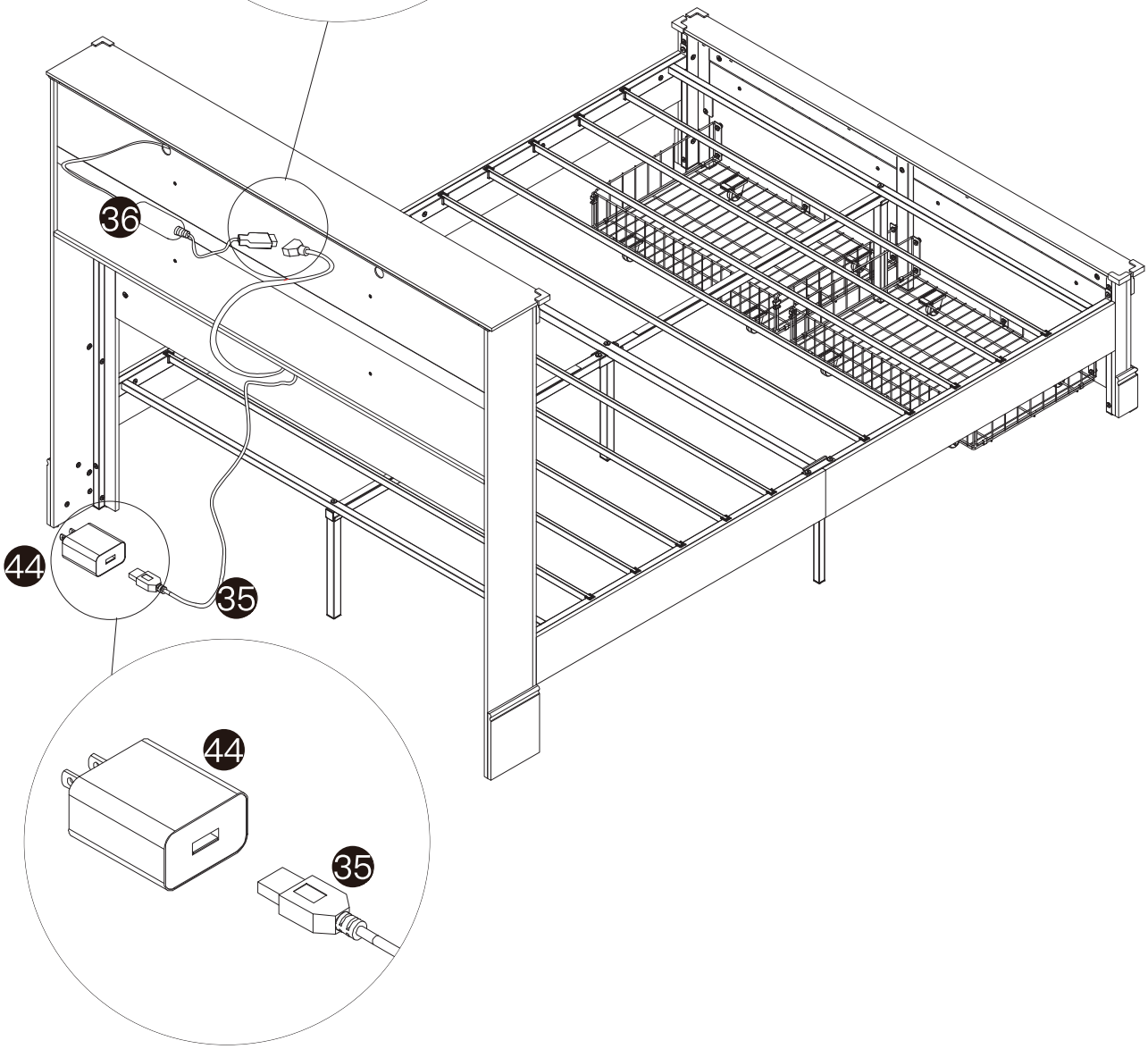

STEP 41

Warm Tips

(1)Please place the assembled bed against the wall.
(2)**Do not** jump or play on the bed.
(3)For your safety , please **do not** crawl under the bed.



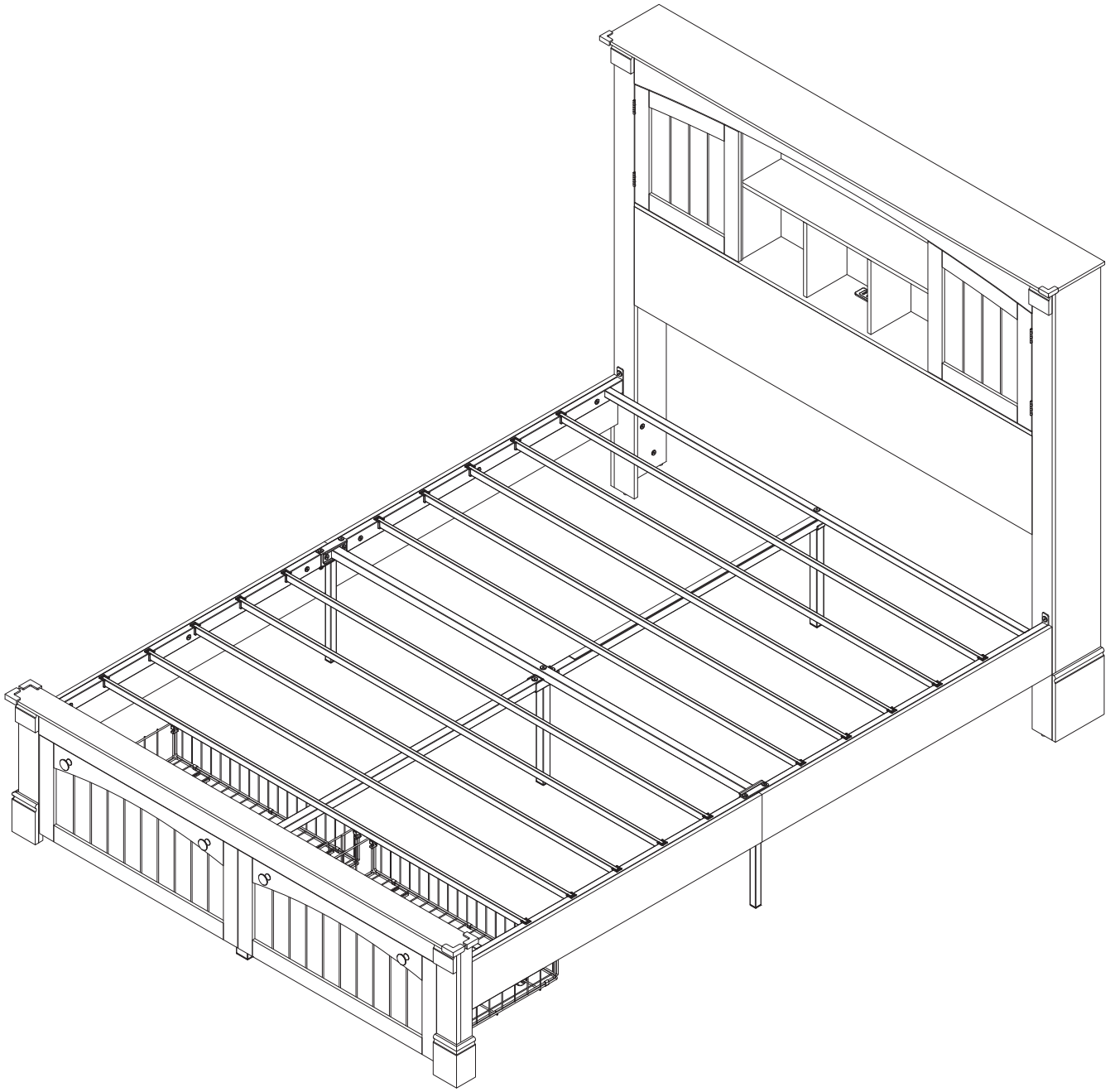

Wheel Category

Instructions for Use

–Deodorization: It is normal for wheels to have a rubber smell, so there is no need to be nervous. Just place the wheels in a well–ventilated area to let the smell dissipate before installation.
–Usage Method: Install them at the bottom of compatible products, ensuring that the wheels can rotate flexibly, the braking function (if any) works properly, and push at a constant and stable speed. Avoid driving quickly on uneven ground to reduce wheel wear.



Notes

- Ensure the integrity of accessories: Prevent collisions and falls that may cause wheel deformation and bearing damage, as well as hard objects from scratching the wheel surface.

- **Load–bearing limit:** Strictly use within the rated load to avoid wheel damage and product tilting due to overloading.

- **Ground protection:** Avoid long–term use on sharp, uneven ground to prevent wheel surface wear and jamming.

- **Brake usage:** For wheels with a braking function, please brake and fix them in time when the product is not in use to prevent the product from sliding.

- For the safety of you and your family, it is recommended to install the **Anti–Tip Device Kit**.



Maintenance Methods

Cleaning method: Wipe the dust and debris on the wheel surface with a damp cloth, and clean the bearing parts with a dry soft brush. Regularly check the wear of the wheels, whether the bearings rotate smoothly, and whether the brakes are sensitive, and replace severely worn wheels in time.

Light strip

Preparation before Installation

Before installation, please carefully read the instructions for this type. Check whether the light strip, power adapter, controller (if any), and connecting wires are in good condition, without extrusion, cuts, or exposed wires.
Confirm that the output voltage (V), current (A), or power (W) of the power adapter fully matches the rated input parameters of the light strip. **Strictly prohibit use with overvoltage or overpower!**
Confirm that the type of the controller (RF remote control, WiFi, Bluetooth, DMX, etc.) is consistent with your needs and compatible with the light strip (in terms of voltage and signal protocol).

Instructions for Use

(1) Operate the on/off function, dimming, color adjustment, and mode switching according to the controller's instructions. Avoid prolonged full – power operation in extremely high – temperature environments (such as direct sunlight without heat – dissipation measures) or enclosed, poorly ventilated spaces.

(2)Unless necessary, **Do not** frequently turn the power on and off. Avoid pulling, squeezing, or folding the light strip, as this may cause circuit breaks and render the light source inoperable.



Notes

- **Stay away from all water sources:** Use the light strip away from water sources or humid environments.
- **Strictly prohibit live – line operation:** All installation, cutting, connection, and maintenance must be carried out when the power is off.
- **Power adapter:** Be sure to use the original or high – quality power adapter with strictly matching parameters.

- **Pay attention to temperature:** It is normal for the light strip to feel slightly warm when working. But if it feels scalding hot (> 50°C), it indicates poor heat dissipation or overload. You must immediately cut off the power and check (installation environment, power matching, whether there is a local short circuit).

- **Professional installation:** For complex installations (such as long – distance, high – power, special environments) or if you lack electrical knowledge, it is recommended to seek the help of a professional electrician.

- **Child safety:** Keep children away from this component; Prevent children from biting, swallowing, or wrapping it around their bodies.



Maintenance Methods

(1) **Cleaning Method:** Before cleaning, be sure to disconnect the power supply and wait for the light strip to cool down. Use a dry or slightly damp soft cloth to gently wipe dust and stains on the surface of the light strip. The surface of the encapsulated glue is relatively easy to clean. It is strictly forbidden to use corrosive chemical cleaning agents (such as strong acids, strong alkalis, alcohol, gasoline, thinner, etc.), abrasives, steel wire balls and other hard objects for wiping, so as not to damage the surface finish, transparency of the encapsulated glue layer or cause aging and cracking. **Do not** soak the light strip in water for cleaning!

(2) **Inspection and Maintenance:** Regular inspection (recommended quarterly or semi – annually): Check whether the light strip has physical damage (such as cuts, indentations, colloid cracking, degumming). Check whether all connection points (joints, solder joints, power interfaces) are firm, free of rust, and free of water ingress marks. Check whether the waterproof measures (end caps, connector seals, sealant) are in good condition and not aged and ineffective. Check whether the fixing devices (back glue, buckles, cable ties) are loose or fallen off.

Power strip

Preparation before Installation

Ensure the rated voltage range marked on the power strip covers your local voltage. **Never use** it if they don't match!
Carefully check the maximum rated power (in Watts, W) or maximum current (in Amperes, A) marked on the power strip. This indicates the total load limit the strip can handle.

Instructions for Use

(1) Insert the power strip plug fully into the wall socket to ensure good contact.

(2) Plug appliances directly into the power strip's sockets. Never dai-sy-chain (cascade) another power strip onto this one, especially for high-power devices. This significantly increases the risk of overloading and circuit overheating.



Notes

- Waterproof and moisture – proof: Keep away from water sources. Do not cover the power strip (such as covering it with blankets, books, curtains). Ensure there is enough space around for heat dis-sipation. Stay away from heat sources and flammable materials. **Do not** let heavy objects press on the power cord or the power strip itself. **Do not** bend, pull, or step on the power cord. Do not use nails to fix the power cord.

- **Regular Touch Checks:** After using for a while (especially after using high-power devices), gently touch the power strip casing and power cord with the back of your hand. A slight warmth is normal (heat is generated when electricity passes through), but if it feels hot to the touch, stop using it immediately and unplug all devices!

- **Child Safety:** If there are children in the household, choose a power strip with safety shutters (to prevent foreign objects from being inserted into individual sockets) and educate children not to play with the power strip or power cord.

Maintenance Methods:

(1) Regular Cleaning: Be sure to first unplug all plugs and disconnect the power strip from the wall socket, then wipe dust off the casing and power cord with a dry, soft cloth, use a dry, soft brush to clean gaps, strictly prohibit using liquid cleaners like wet cloths, cleaning agents, alcohol, sprays, etc. as liquid seeping inside can cause short circuits and electric shock risks; if there's dust in the sockets, carefully clean them using a can of dry compressed air (keep a certain distance) or a dry, soft brush and never poke the sockets with metal objects such as paper clips or toothpicks!

(2) **Regular Inspection:** Conduct inspections once a month or once a quarter: check if the power cord has damage, hardening, cracks, in–dentations, or pet bite marks; check if the plug and sockets have signs of scorching, deformation, looseness, or poor contact; inspect the casing for cracks, deformation, or traces of abnormal heating; and smell for any unusual burning odor (even when not powered on, internal faults may leave residual odors). If any of the above issues are found, stop using it immediately and replace it!

(3) **Avoid Improper Operation: Do not** force mismatched plugs into the sockets; when plugging in or unplugging, hold the plug itself with your hand and **Do not** pull the power cord; **Do not** place the power strip in locations where it may be stepped on or cause people to trip.

After-Sale Support

Dear Customer,

Thank you for choosing to purchase our products！ We attach great importance to your shopping experience and hope to ensure that you are satisfied with this purchase.

Should you have any questions, please contact us through the original purchase platform. We will reply your messages as soon as possible, please kindly wait for the response from our team.

Thank you again for your understanding and support! If you have any other questions, please feel free to contact us at any time.

Best Regards,
After sales service team