TEAR SHEET



# Emiko 27" Table Lamp

Item # CHA 8669SBM-L

Designer: Chapman & Myers

Height: 27.25"

Width: 18"

Base: 4" x 10.75" Rectangle

Finishes: AWC, MLA, SBM

Shade Treatments: L

Shade Details: 14" x 18" x 12.25"

Socket: E26 Dimmer

Wattage: 15 LED A19

Weight: 22 Pounds

Note: 120V Configuration Only | Reactive Ceramic Glazes Will Vary ir Color and Texture

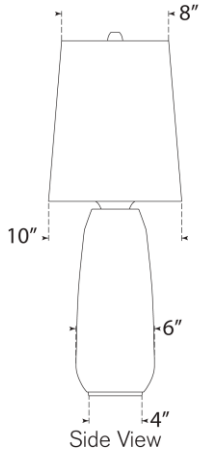

Side View

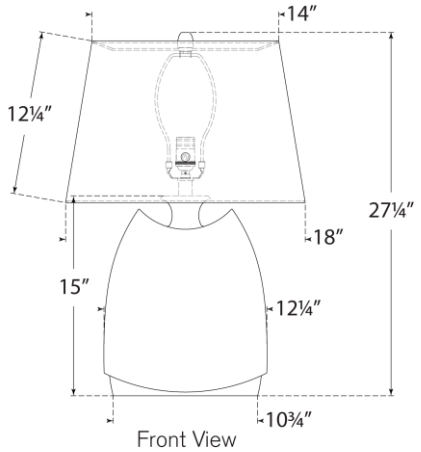

Front View

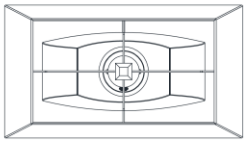
Top View

VISUAL COMFORT & CO.