ASSEMBLING INSTRUCTION

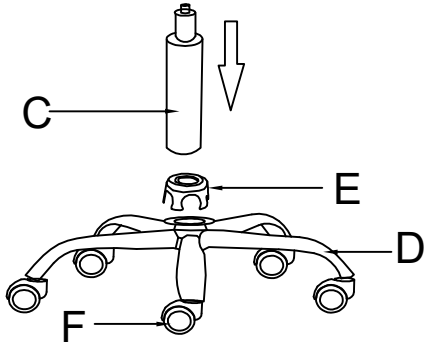

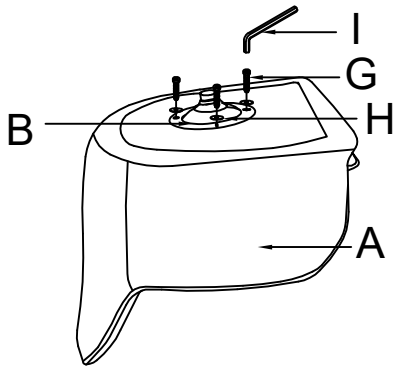

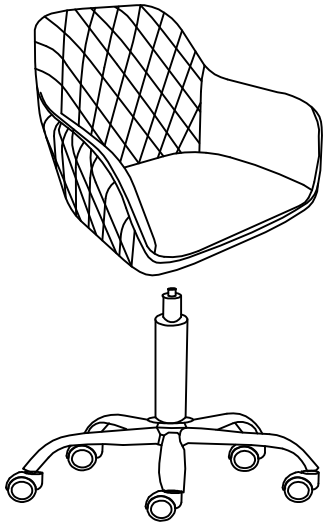

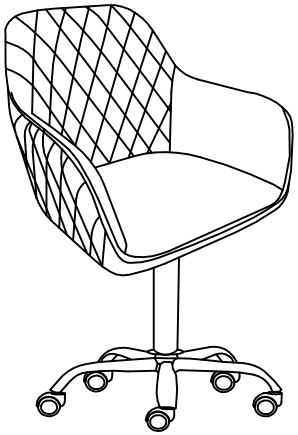

A		1
B		1
C		1
D		1
E		1
F		5
G		4
H		4
I		1