Counter Stool

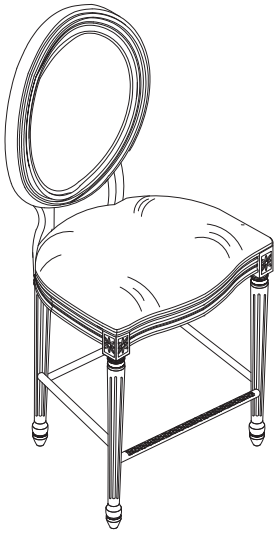

***Intended for residential use only**

LIMITED WARRANTY

We warrant to the original purchaser that this product will be free from defects in material and workmanship as described below. We will repair or replace, at its option, without charge to the original purchaser only, defective products or parts for one (1) year from the date of purchase.
Replacement parts can only be supplied if parts are available. Items out of production may be unavailable. This warranty shall be effective for the applicable time period beginning from the date of purchase as shown on your original sales receipt. This warranty is your sole remedy for product defects and excludes defects due to or arising in connection with product abuse or misuse, use modification of, or attachments to the product, and products or parts not used, maintained, or installed in accordance with the company's installation, maintenance and/or applicable guidelines. There are no other warranties, express or implied, other than those specifically described, including without limitation any implied warranty of merchantability or of fitness for a particular purpose. We will not be responsible for incidental or consequential damages. Some states do not allow the exclusion or limitation of incidental or consequential damages, so the above limitations or exclusions may not apply to you. This warranty gives you specific legal rights and you may also have other rights which may vary from state to state. Our quality standards are among the highest in the industry. Sometimes, no matter how hard we try, there are times when parts are damaged or missing. Our Parts Department will do everything possible to promptly remedy the problem. Contact us via e-mail, by Fax, or toll free parts number. To make a warranty claim, contact Parts Department. Provide model number, proof of purchase, description of the problem and obtain return authorization. At its option we will: (a) Supply compatible components of current manufacture. (b) Repair the customer's component. The customer must prepay freight on any components returned to the factory. Return freigh ot n components still in warranty will be paid by us.

Assembly Instructions - Important:

Carefully unpack and identify each component before attempting to assemble. Refer to parts list. Please take care when assembling the unit and always set the parts on a clean, soft surface. If you require any assistance with assembly, parts or information on other products, please visit our website or call or write us.

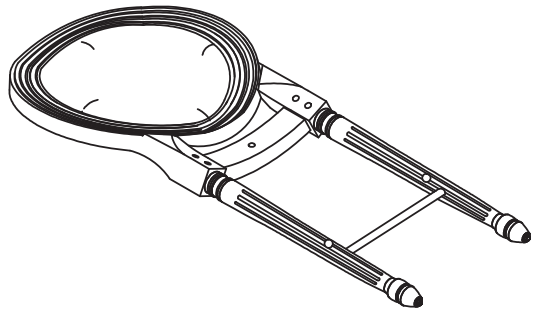

1 (Chair Frame) - 1 Piece

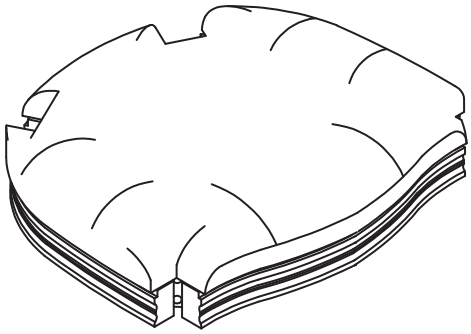

2 (Seat Cushion) - 1 Piece

3 (Left Front Leg) - 1 Piece

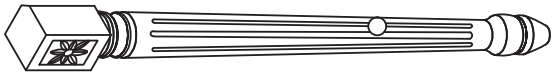

4 (Right Front Leg) - 1 Piece

5 (Front Stretcher) - 1 Piece

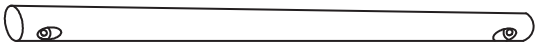

6 (Side Stretcher) - 2 Pieces

HARDWARE LIST			
A		BOLT	9 PCS + 1 EXTRA
B		SCREW	6 PCS + 1 EXTRA
C		LOCK WASHER	9 PCS + 1 EXTRA
D		FLAT WASHER	9 PCS + 1 EXTRA
E	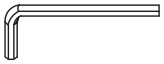	ALLEN WRENCH	1 PC

Phillips Screwdriver also needed for assembly (not provided).

Step 1

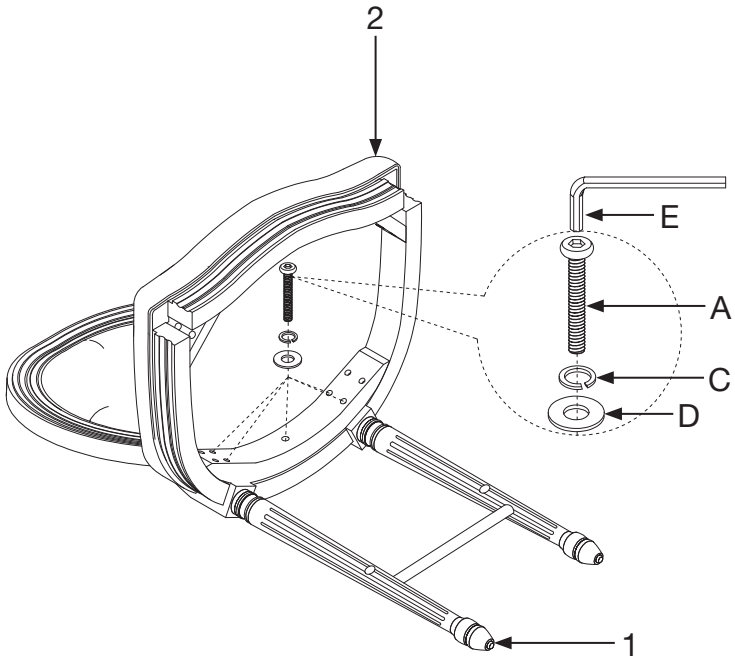

DO NOT FULLY TIGHTEN BOLTS.

Step 2

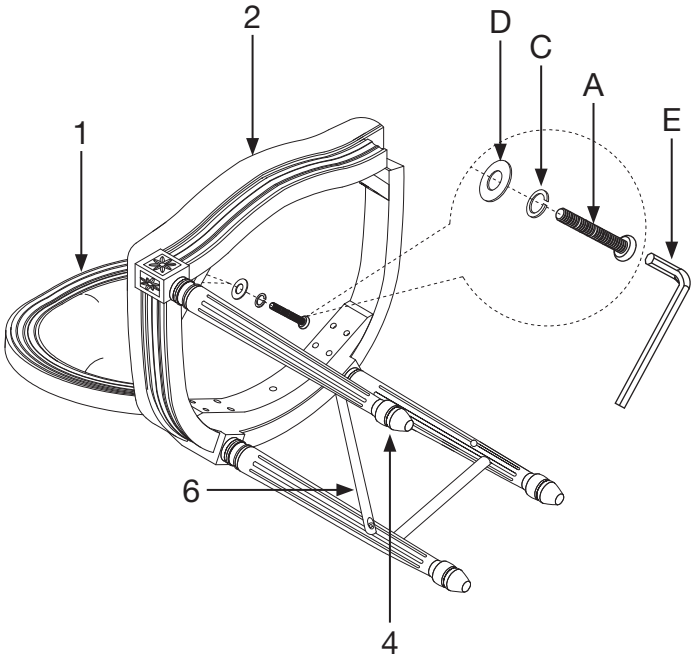

DO NOT FULLY TIGHTEN BOLTS.

Step 3

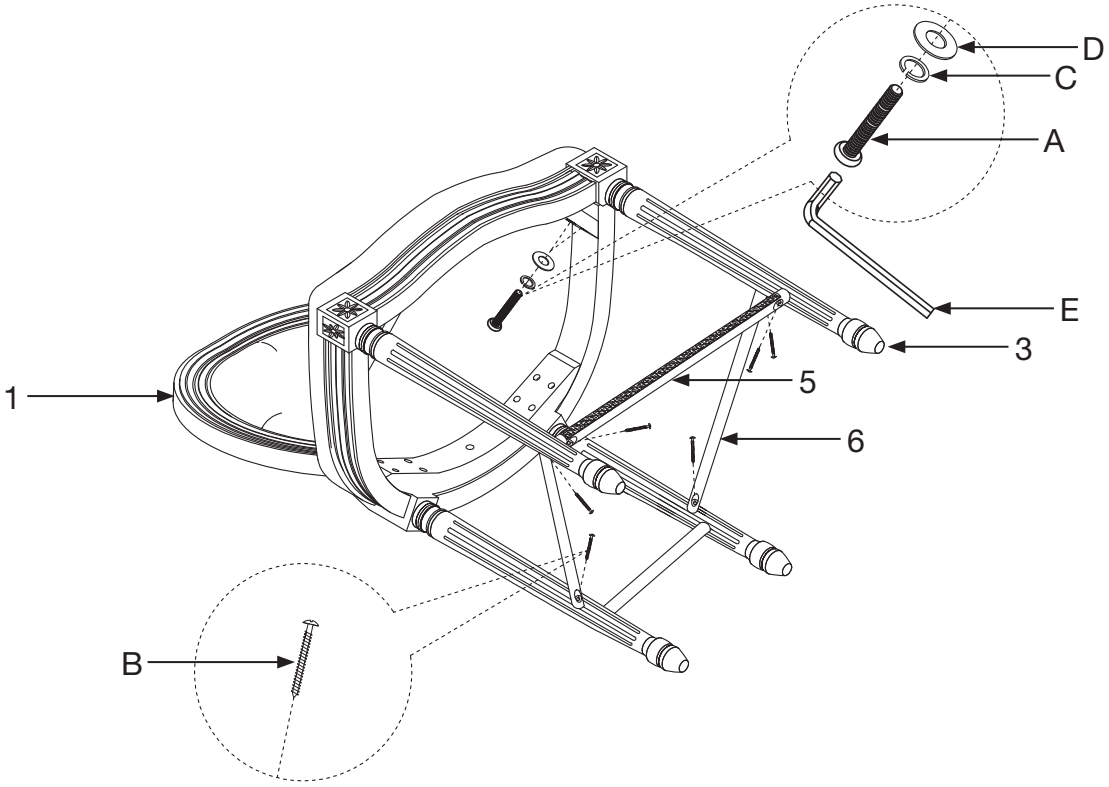

TURN CHAIR TO THE UPRIGHT POSITION, APPLY FIRM PRESSURE TO ALIGN & FULLY TIGHTEN BOLTS AND SCREWS.