ASSEMBLY INSTRUCTION FOR

MODEL: BENNY 4 DOOR SIDEBOARD

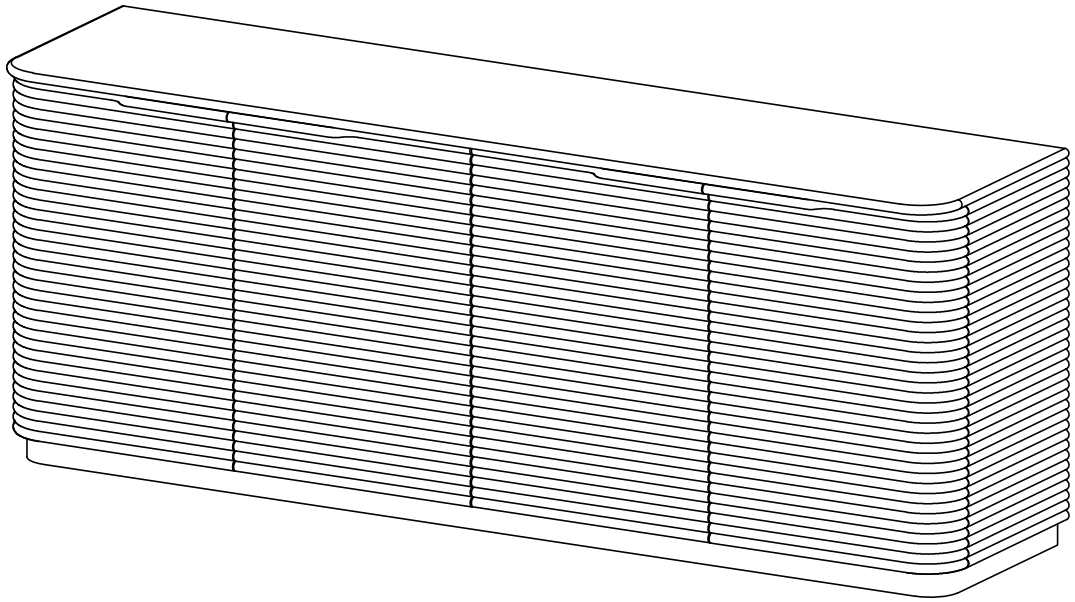

MADE IN VIETNAM

Step 1

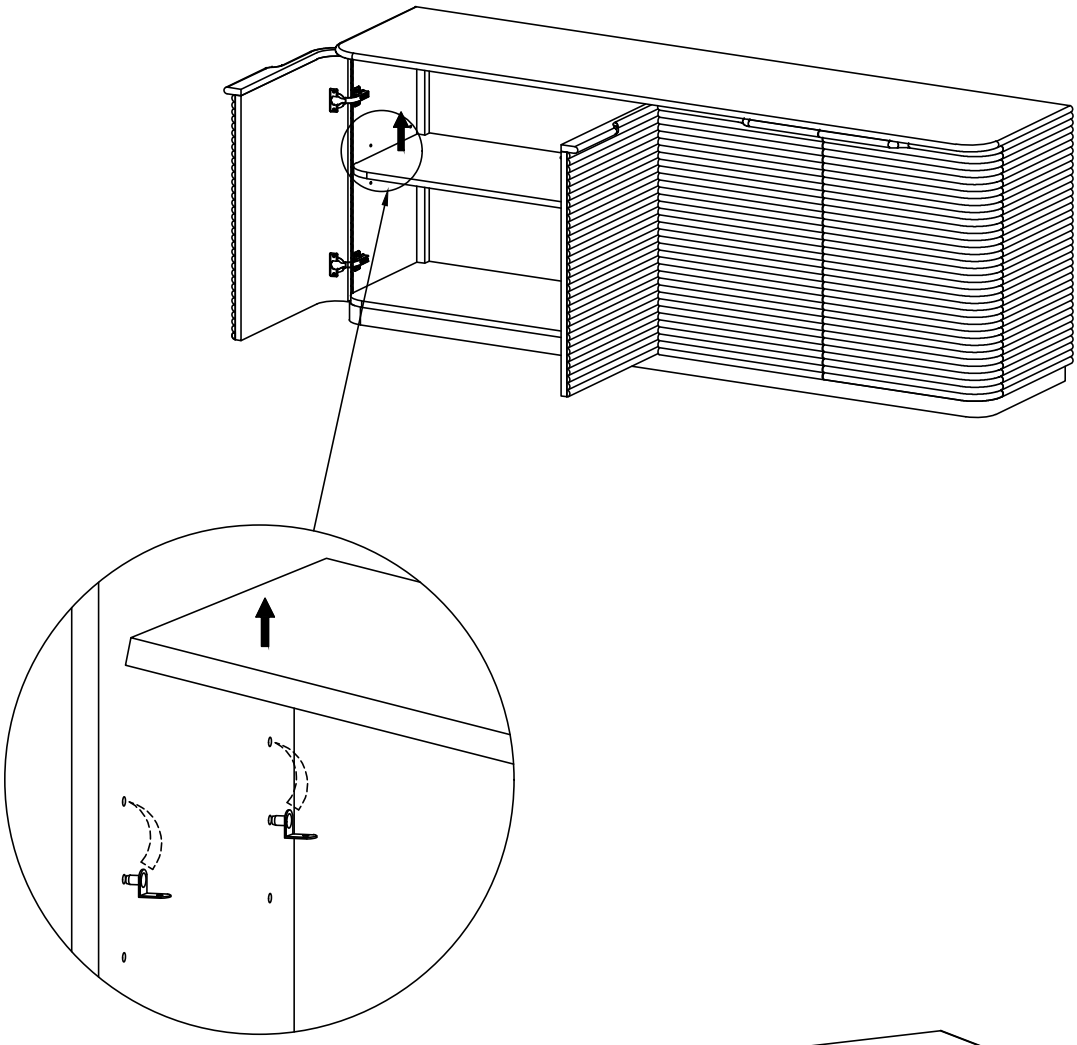

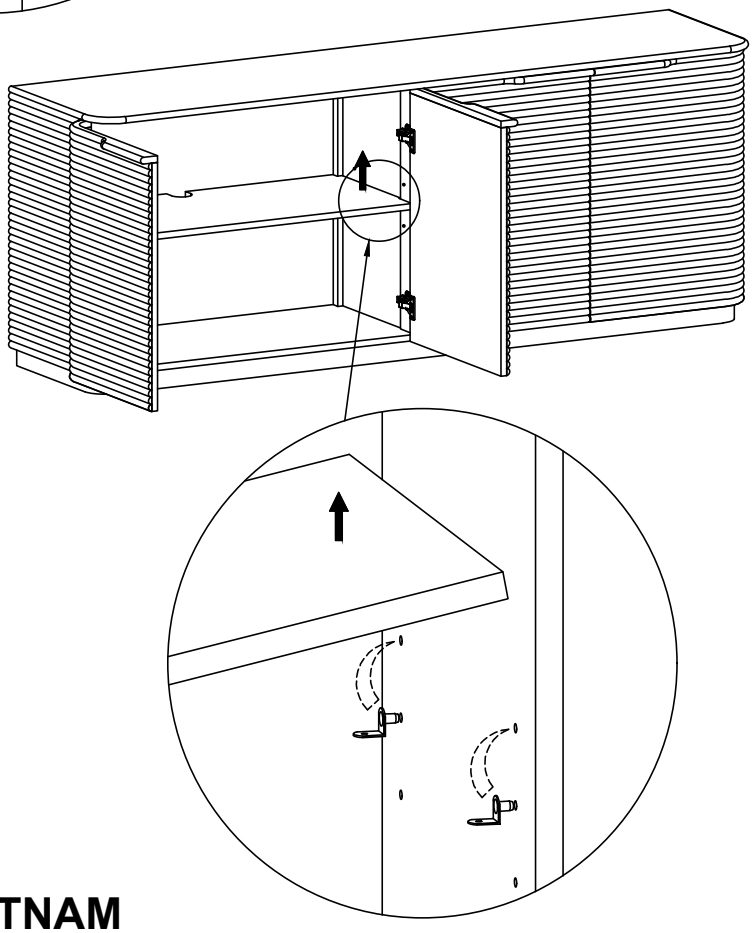

Adjusting Floor Levelers

Check for Stability - Place the furniture in its final position on a level surface. If it wobbles or doesn't sit evenly, the floor levelers need adjusting.

Locate the Levelers - These are small adjustable feet found at the bottom corners of your furniture.

Adjust as Needed - Using your hand or a wrench, turn the levelers clockwise to raise or counterclockwise to lower the furniture. Make small adjustments and check stability after each turn.

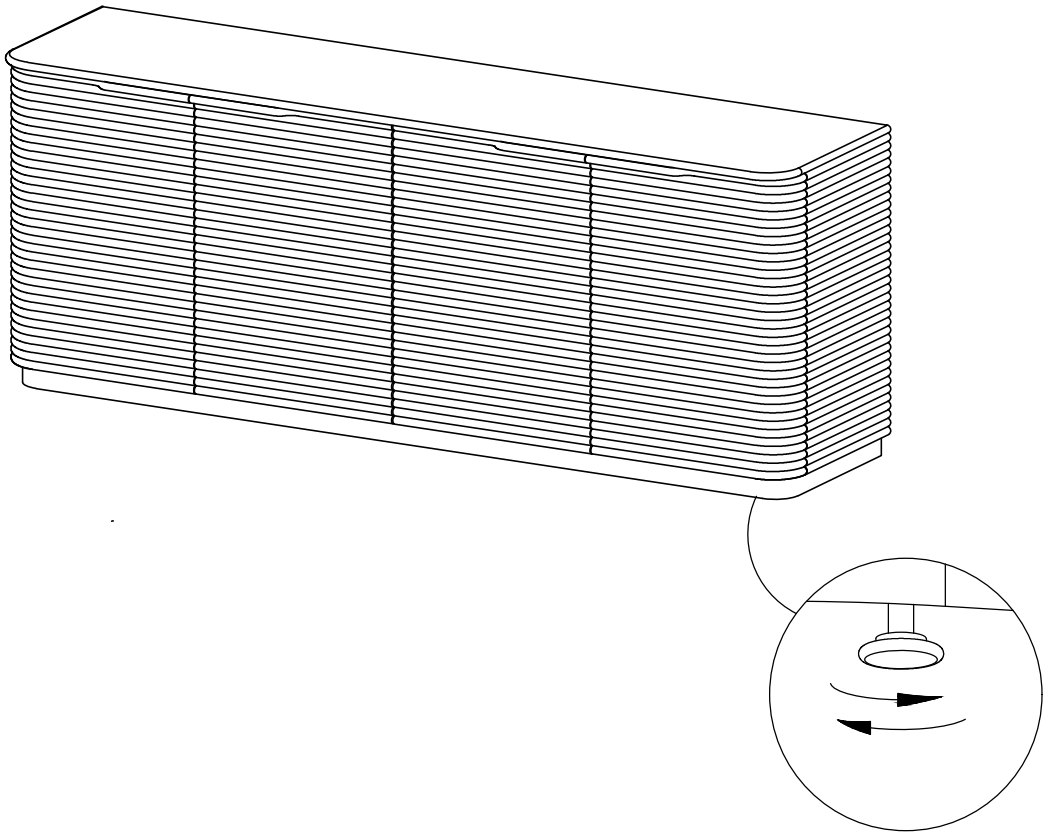

If you need further adjustments, repeat the process in small increments.

Adjusting door hinges

Your furniture has been expertly crafted and re-adjusted by professionals. However, slight shifts can occur during transportation. If you notice that the doors are not perfectly aligned or the furniture wobbles, a quick adjustment can help ensure stability and a seamless look.

Adjust the Hinges (If Necessary)

Make sure that the furniture is level left to right and front to back before attempting to adjust the hinges.

Identify the Hinges - The hinges have adjustment screws that control movement in different directions.

Adjust as Needed - Using your hand or a wrench, turn the levelers clockwise to raise or counterclockwise to lower the furniture. Make small adjustments and check stability after each turn.

1.Left and Right Adjustment: To shift the cabinet door sideways for alignment.

2.Back and Forth Adjustment: To move the cabinet door closer to or farther from the cabinet frame

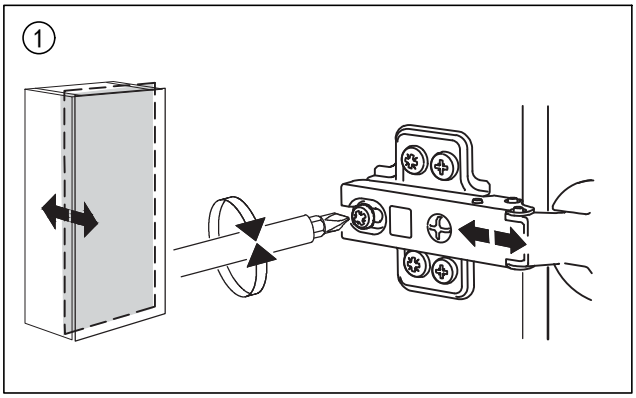

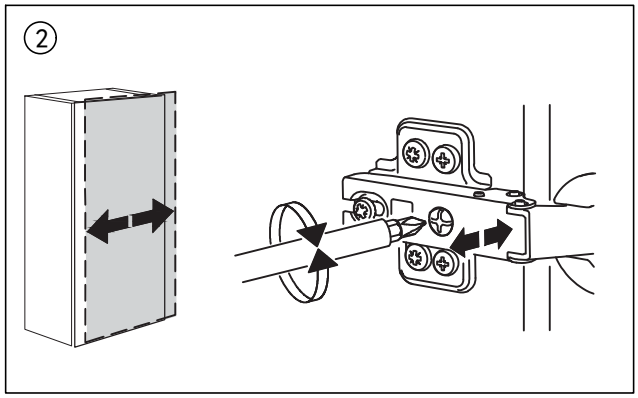

TIPS FOR ADJUSTMENT:

These“adjustments”are not preset and will need to be checked to meet the desired look

- **We recommend the use of a #2 Phillips Screwdriver.**
- **Adjust in small steps and check you rprogress frequently.**
- **Use a measuring tape to ensure the gaps between the top and bottom of the door are even.**
- **Avoid forcing the door closed if it does not align properly,as this may damage the door**
- **If the alignment is still off,make further adjustments as needed.**

By following these steps,you can achieve a balanced door alignment.

If you need further adjustments, repeat the process in small increments.

Important notes

While adjusting the hinges, firmly hold the door in place to prevent it from falling and getting damaged.

Repeatedly tightening and loosening the hinge screws can cause the screw holes to widen. To avoid this, minimize adjustments and avoid overtightening.