TEAR SHEET



Culloden Cordless Table Lamp

Item # ARN 3678BLL-L-CL

Designer: AERIN

Height: 30"

Width: 18"

Base: 6.5" Round

Finishes: BC, BLL, MS, PA, VI

Shade Treatments: L

Shade Details: 18" x 18" x 11"

Lightsource: Rechargeable LED w/ Touch Dimmer

Wattage: 4.6w (200 - 750lm)

Weight: 9 Pounds

Note: Rechargeable LED Lightsource and Charging Cable Included | Reactive Ceramic Glazes Will Vary in Color and Texture

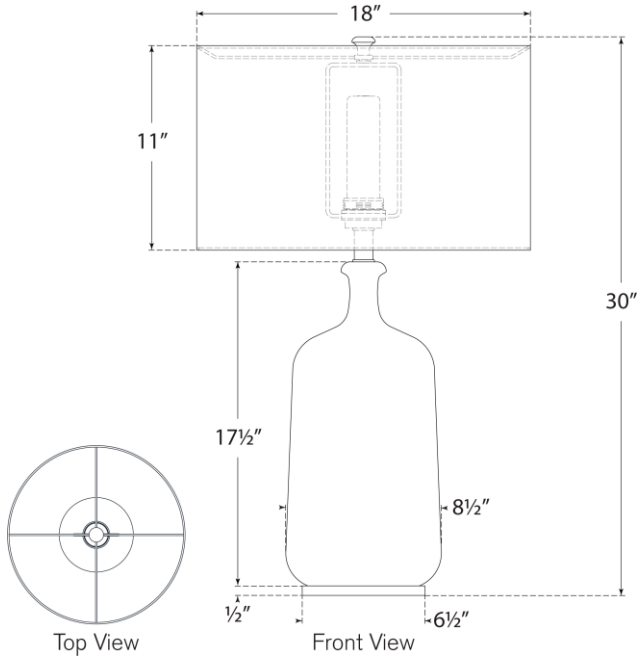

VISUAL COMFORT & CO.

DAMP LED