ASSEMBLY INSTRUCTIONS

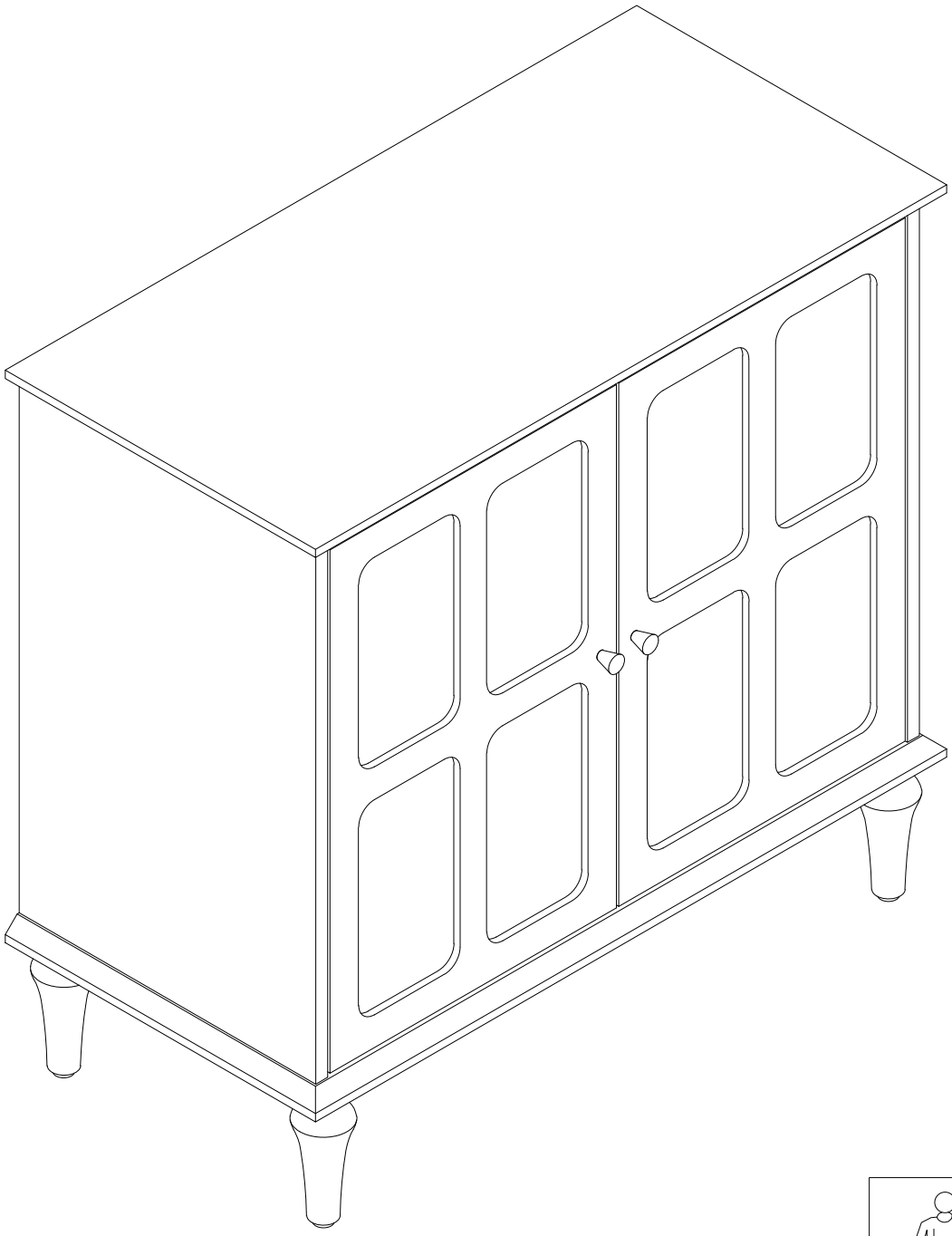

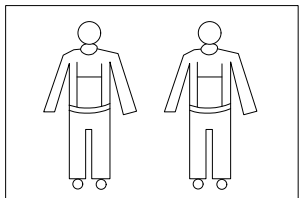

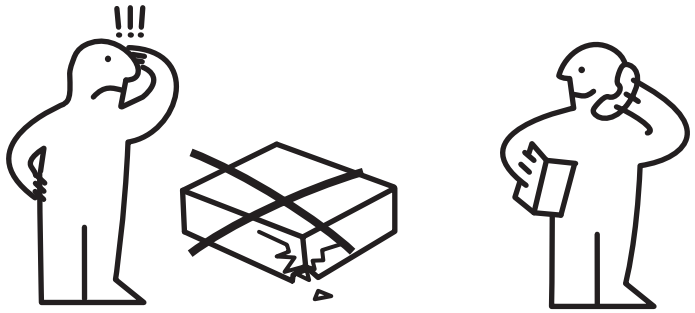

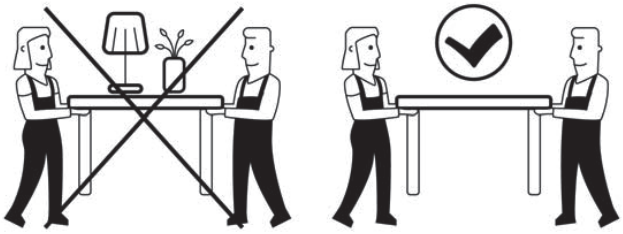

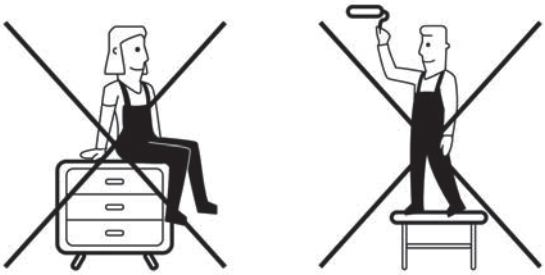

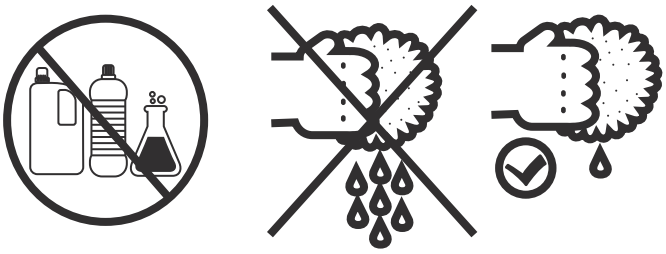

ASSEMBLY TOOLS REQUIRED (NOT INCLUDED)

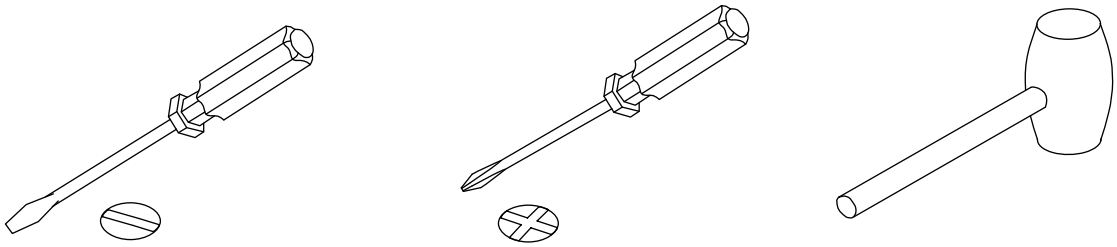

* Before discarding packing materials, please check all parts and hardware are presented.
* Please follow the instructions closely.
* After few days of initial assembly, the product may has acclimated to new environment, please tighten all hardware again.

Dowel Installation

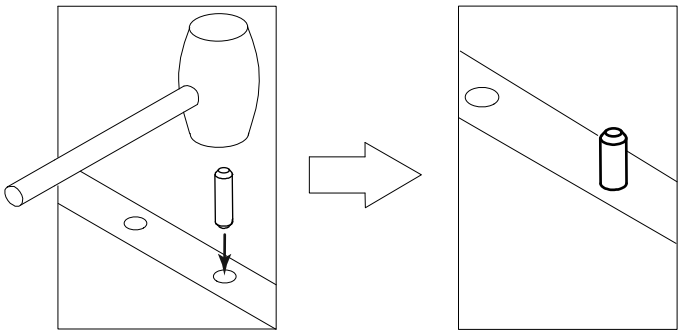

Gently tap dowel into hole with rubber mallet.

CAM-LOCK

Tighten until shoulder is flush with panel.Do not overtighten or undertighten

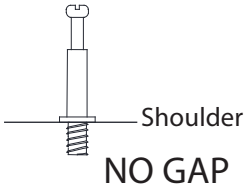

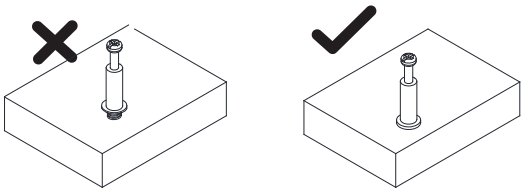

WHEN FITTING CAMS

ENSURE STARTING POSITION IS CORRECT
BEFORE YOU INSERT CONNECTING CAM-PILLAR
TURN CLOCKWISE UNTIL SECURE

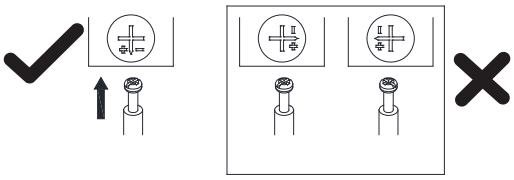

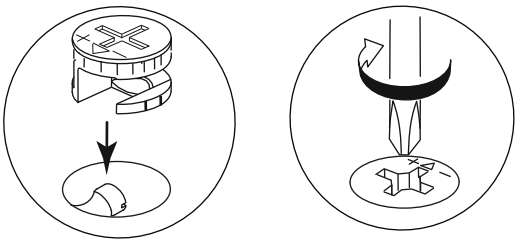

Laying out all the parts and hardware and identifying each part as shown below. It may help you when you assemble the item.

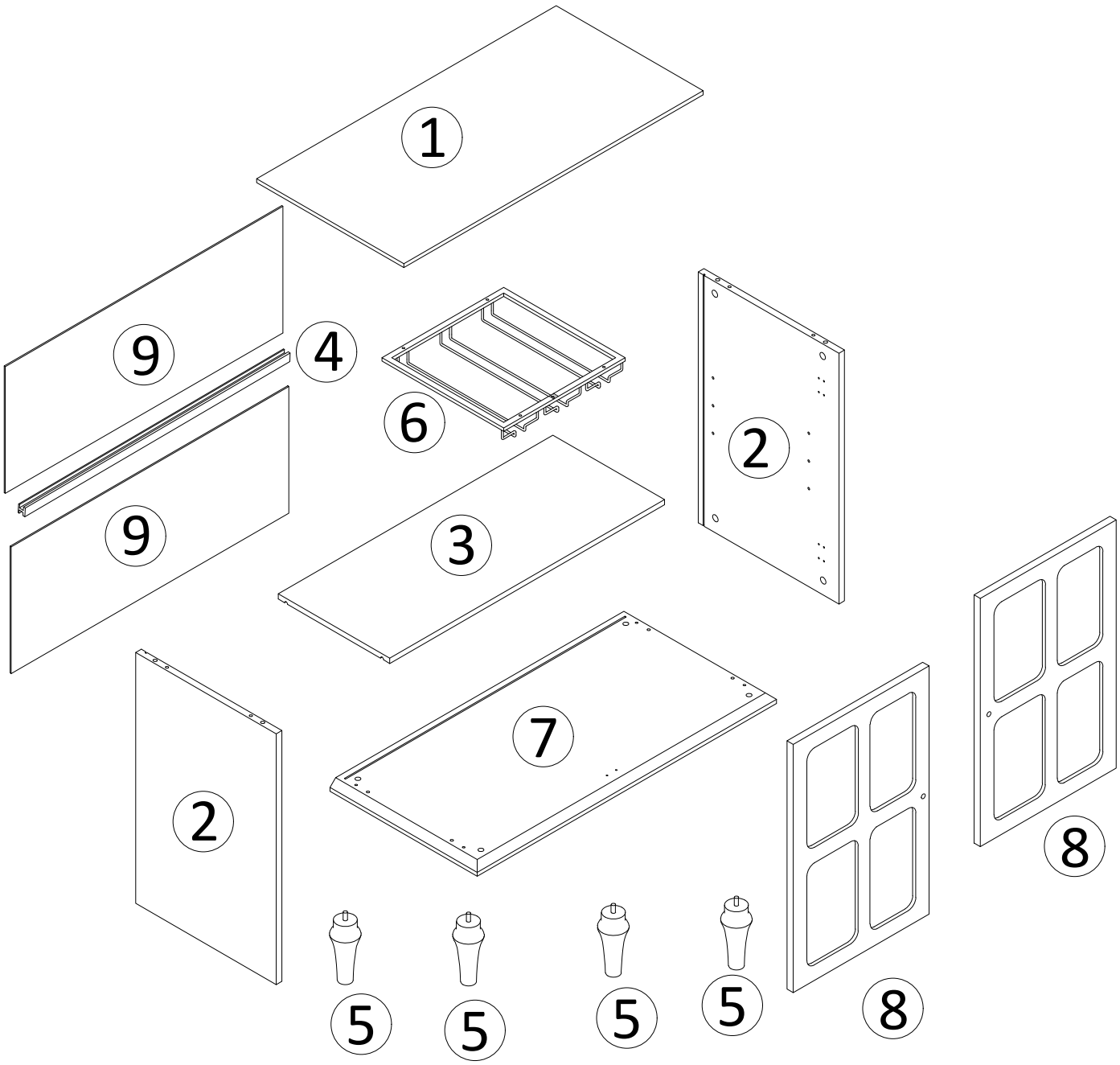

① ×1	② ×2	③ ×1	④ ×1	⑤ ×4	⑥ ×1
⑦ ×1	⑧ ×2	⑨ ×2			

A ×8	B ×8+1(Spare)	C ×8	D ×24+2(Spare)	E ×4
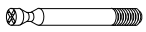				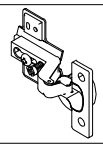
ϕ6×35mm	ϕ10×15mm	ϕ6×30mm	FA4×12mm	ϕ26mm-L
F ×4	G ×1	H ×6	I ×2	J ×2
	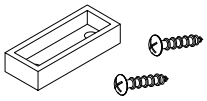	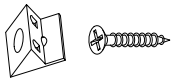		
FA4×20mm	FA3×12mm	FA3×16mm	ϕ20×23mm	M4×20mm
K ×4	M ×2	N ×4	O ×2	P ×4
			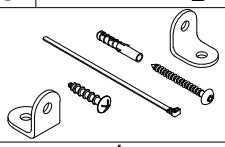	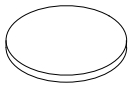
M6×15L-ϕ21×6T	ϕ8×2mm	M5×14mm	4×40mm/4×12mm	ϕ21 sticker

1

Turn the screws vertically from slow to fast.

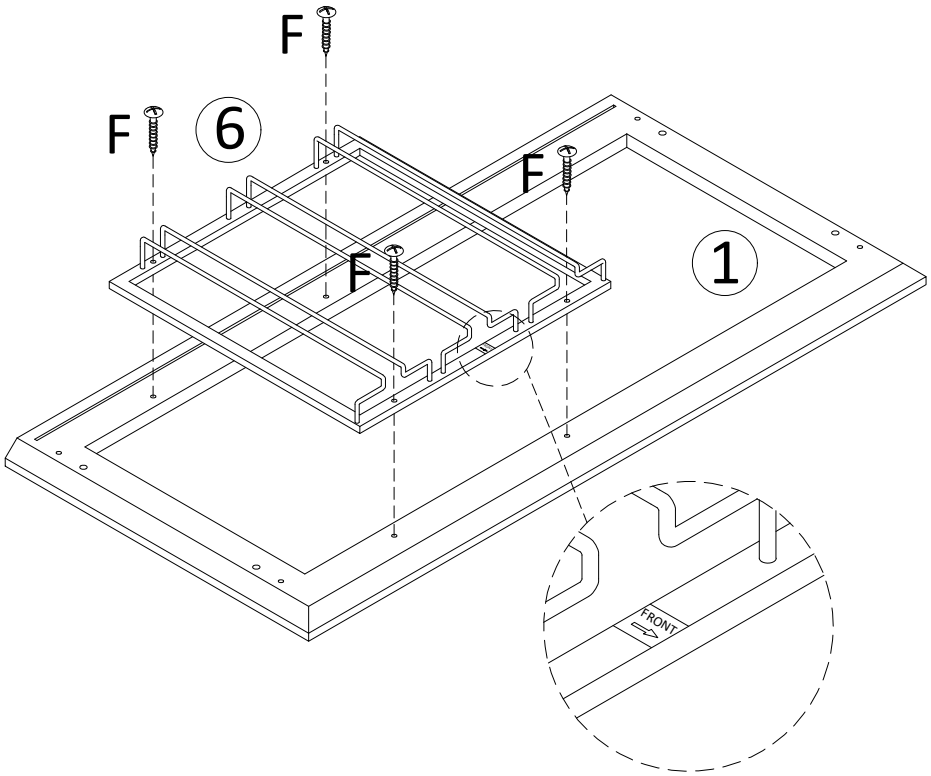

F

×4

2

Turn the screws vertically from slow to fast.

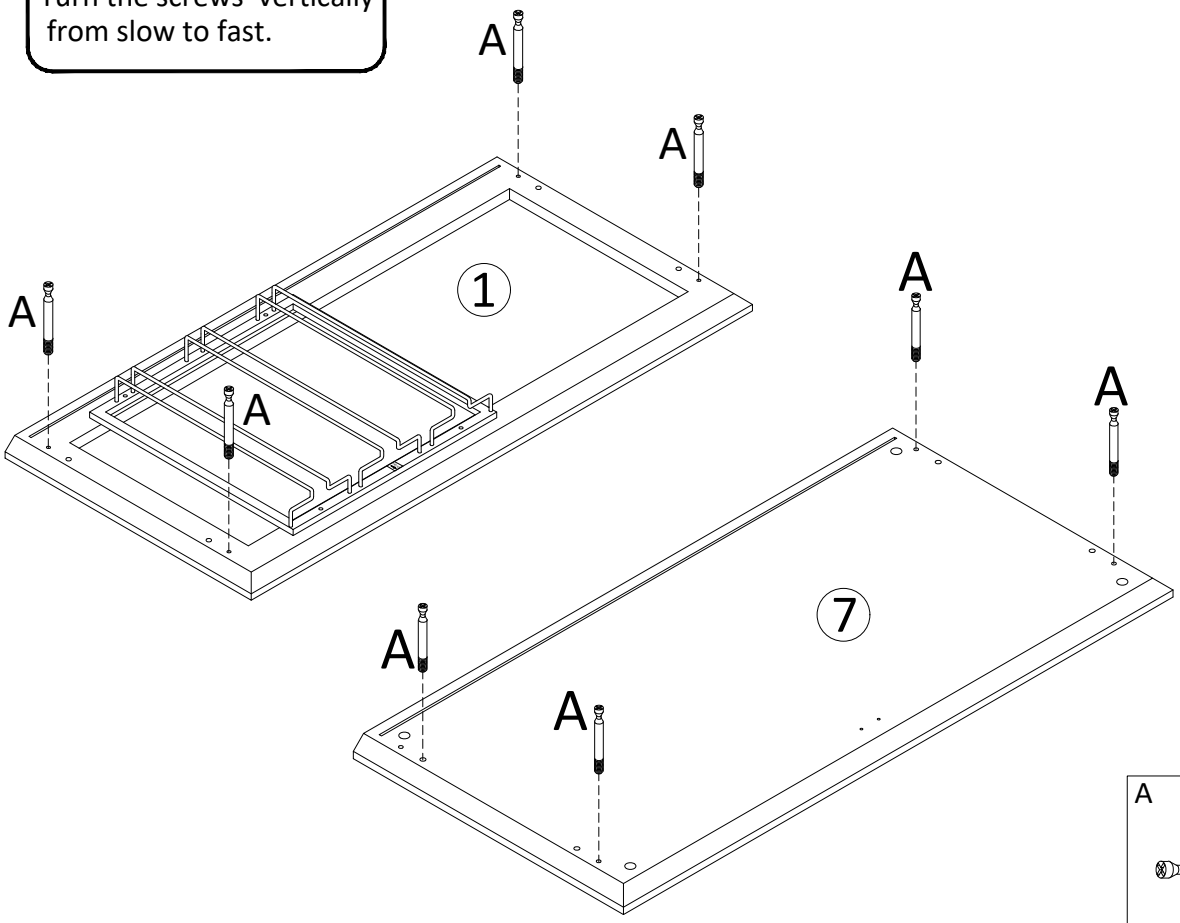

A

×8

3

Turn the screws vertically from slow to fast.

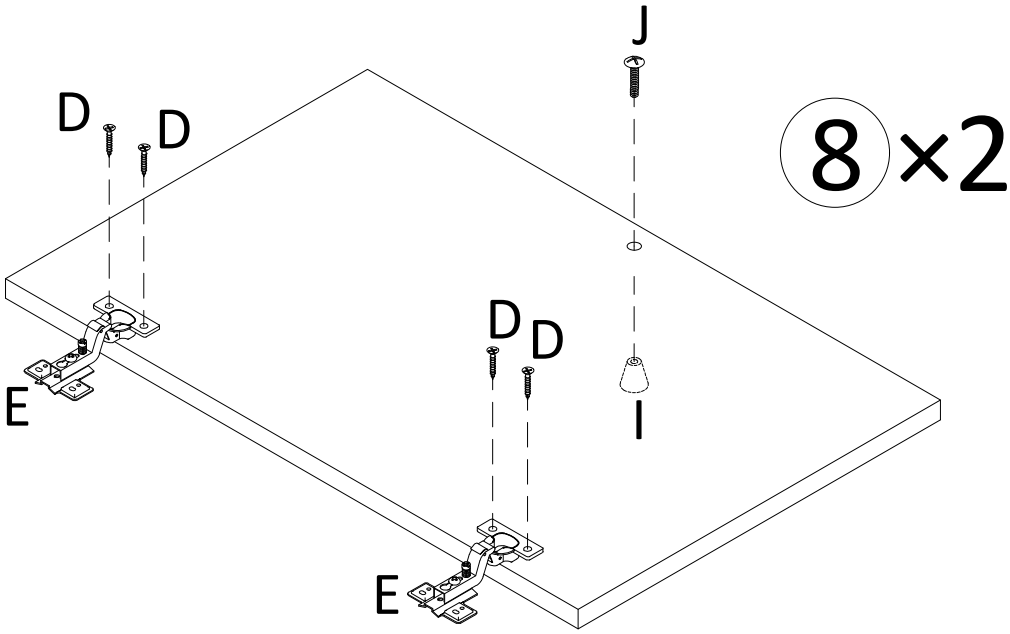

E	I	J	D
×4	×2	×2	×8

4

Turn the screws vertically from slow to fast.

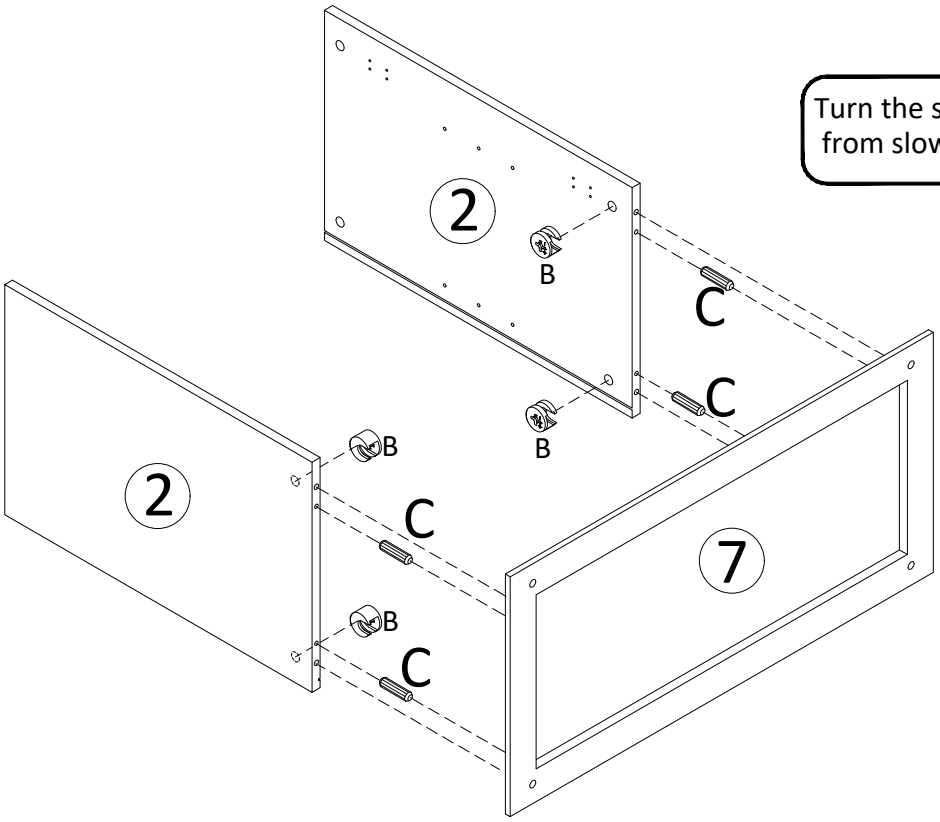

B	C
×4	×4

5

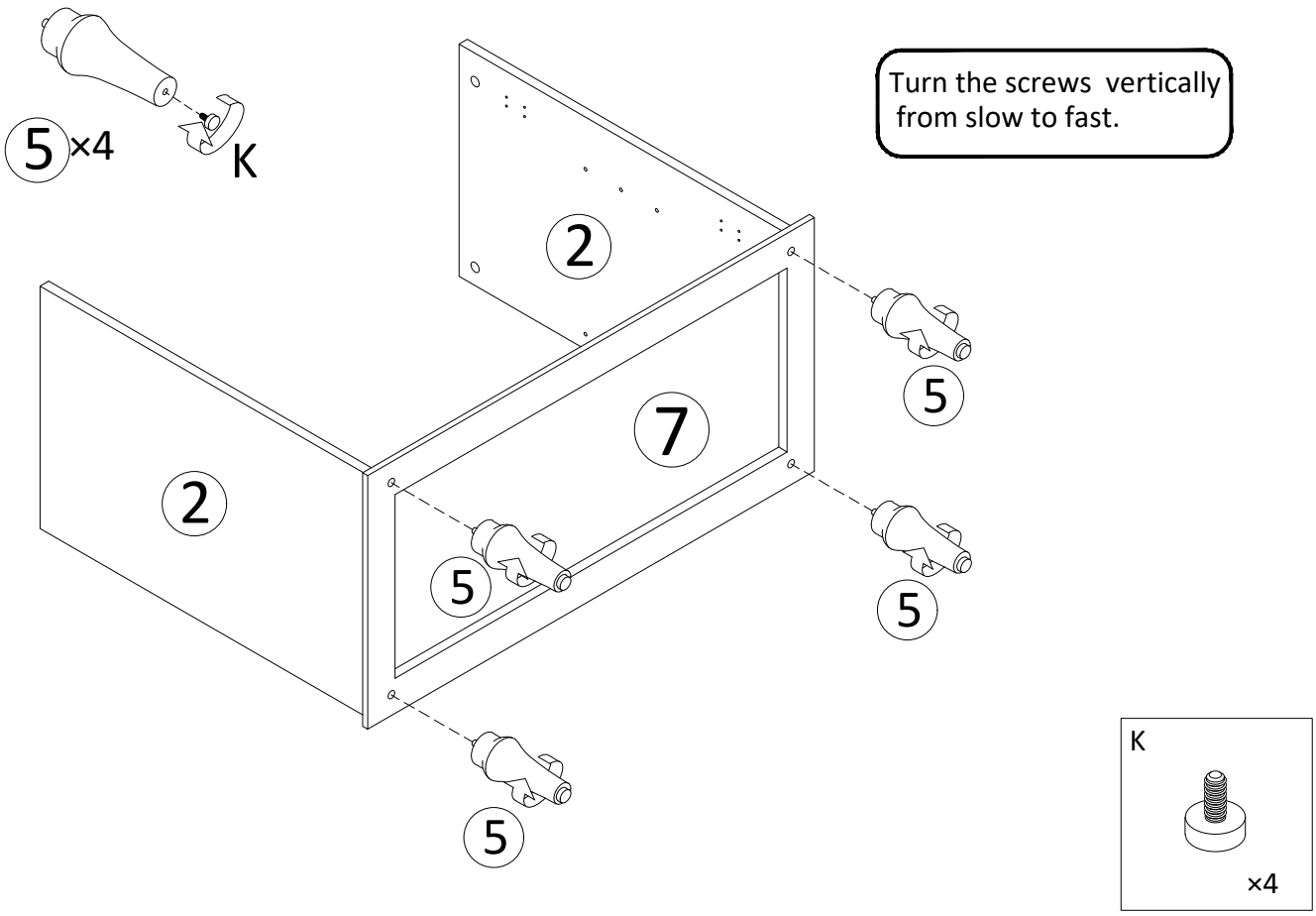
5 ×4
K
Turn the screws vertically from slow to fast.
2
2
7
5
5
5
5
5
K
×4

6

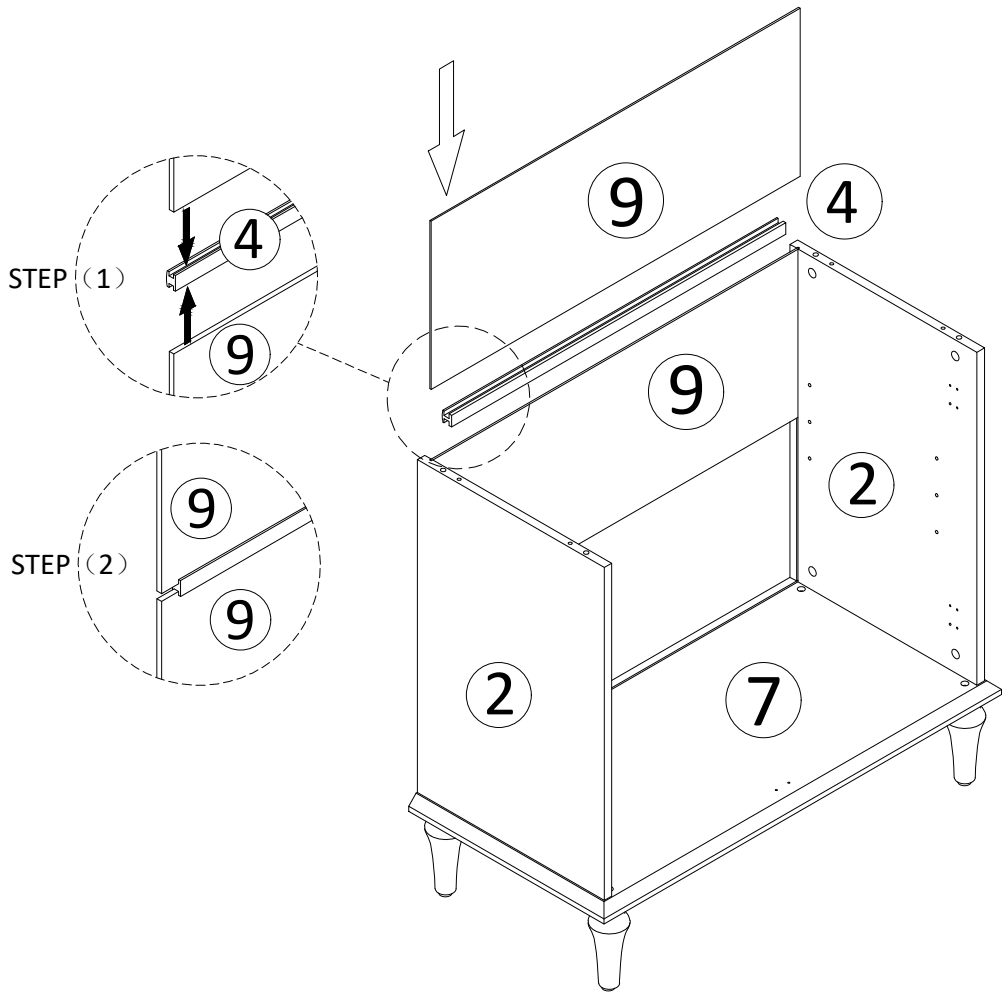
STEP（1）
4
9
STEP（2）
9
9
9
4
9
2
2
7

7

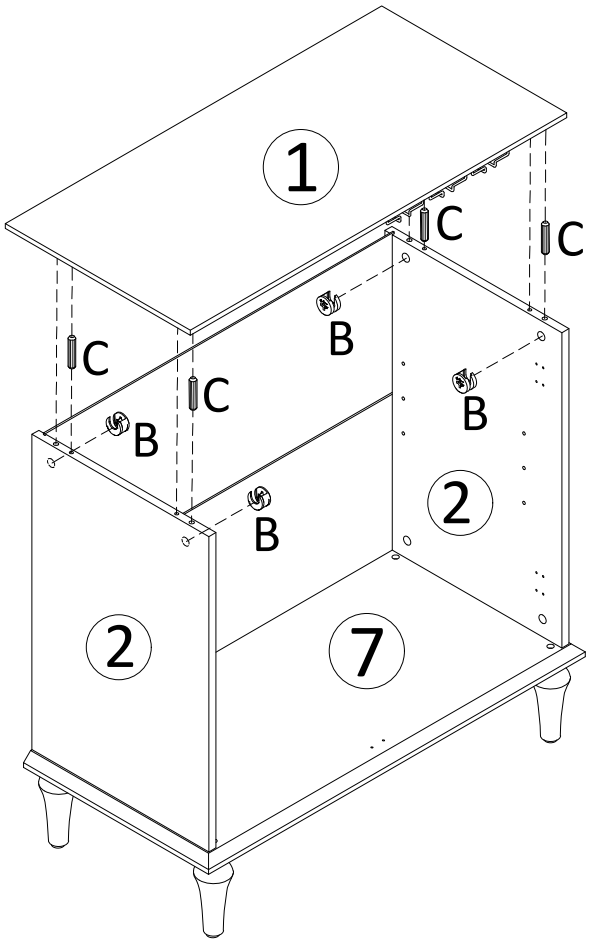

Turn the screws vertically from slow to fast.

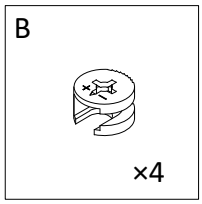

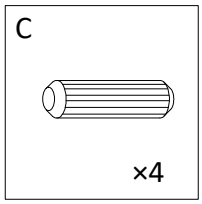

8

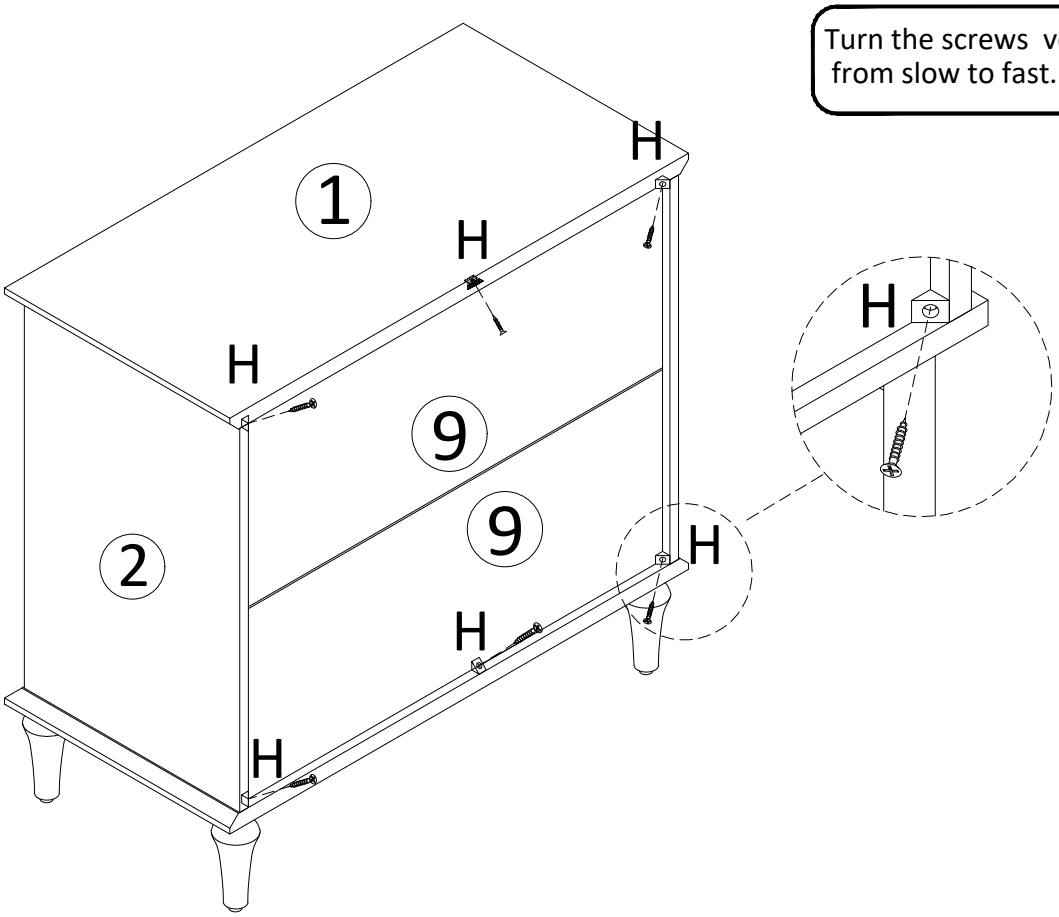

Turn the screws vertically from slow to fast.

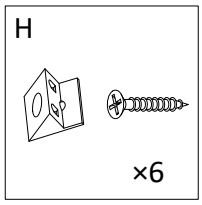

9

Turn the screws vertically from slow to fast.

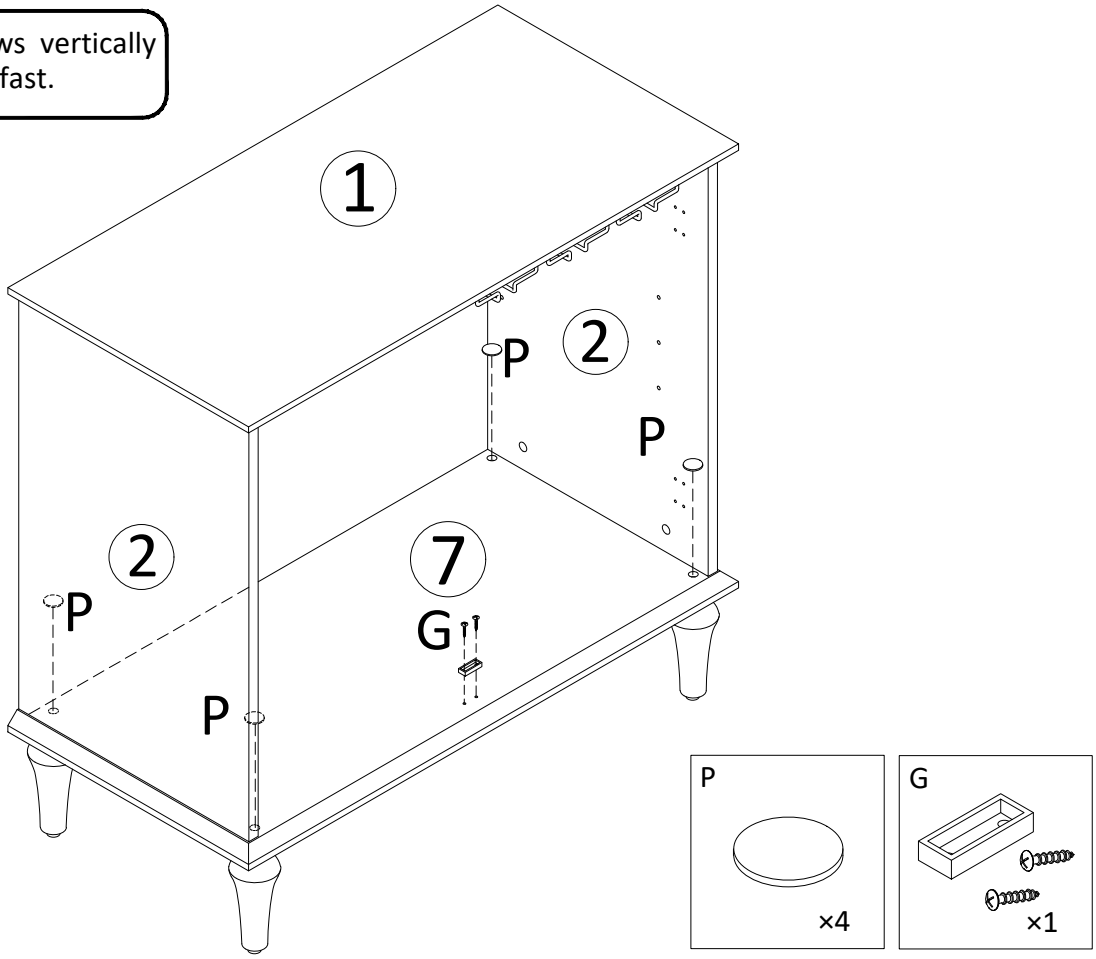

10

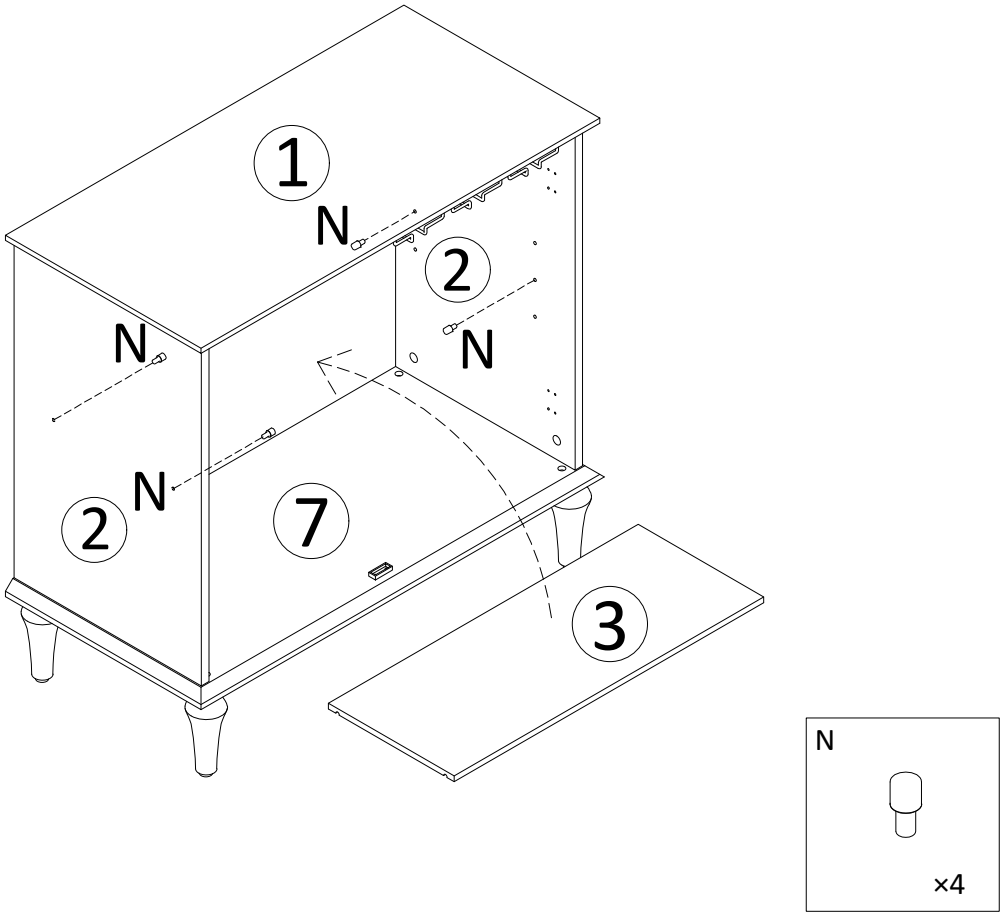

11

STEP（1）

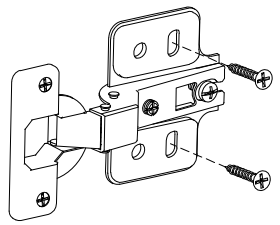

Tips：Turning the screw to approx 50% tightness, don't be fully tight.

STEP（2）

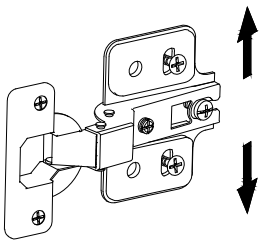

Tips：Moving the hinges up or down appropriately to adjust the gap between the door with the cabinet top and bottom.

STEP（3）

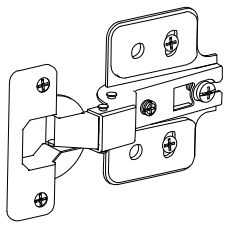

Tips：Tightening the screws completely.

STEP（4）

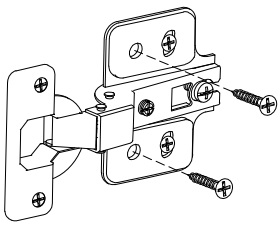

Tips：Tightening the other screws completely.

Turn the screws vertically from slow to fast.

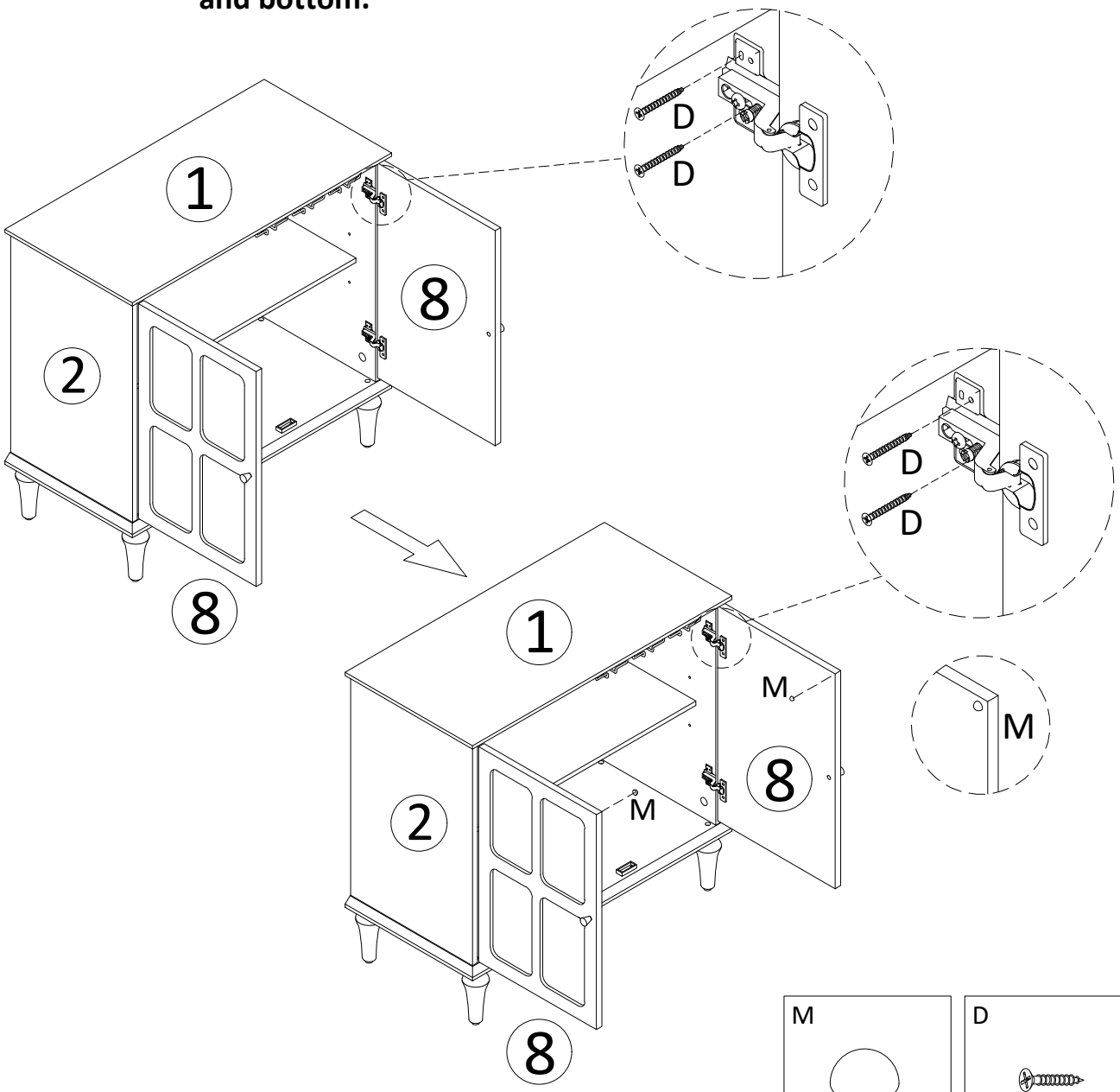

12

Tips：If the gap between two doors is too far or close, please turning the screw as shown below.

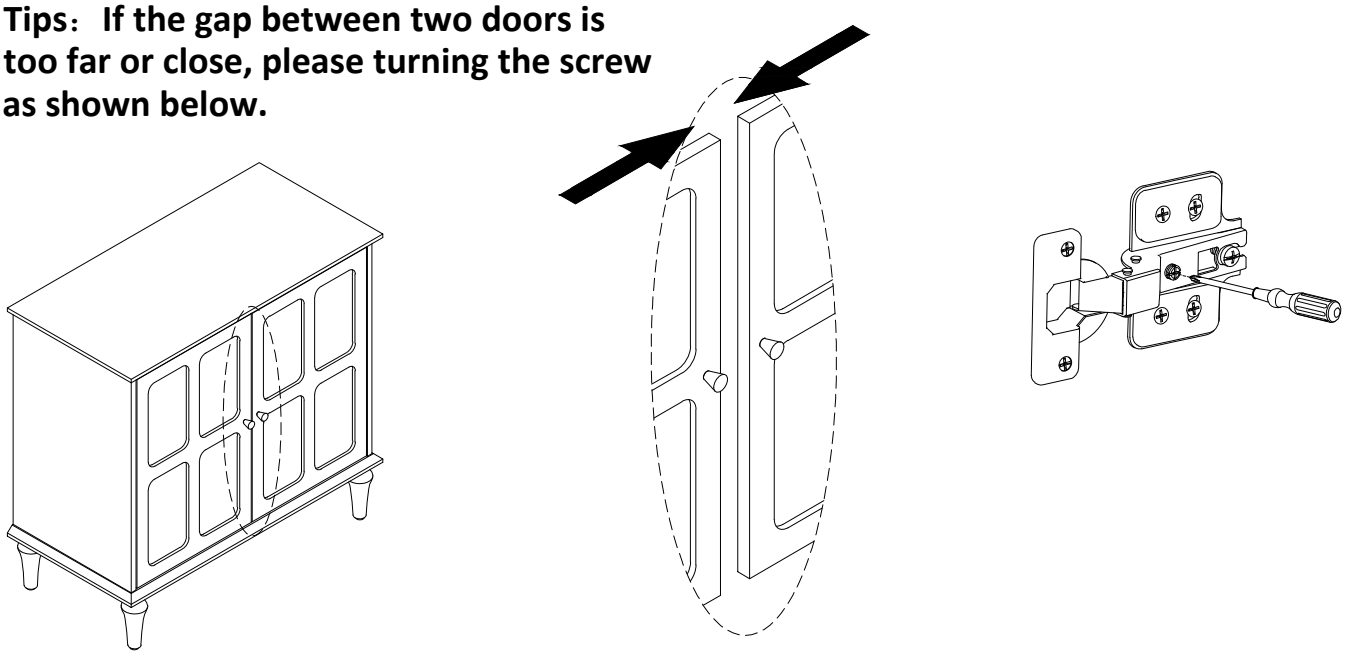

Tips：Adjusting the screw as shown in the following picture can make the door move forward or backward.

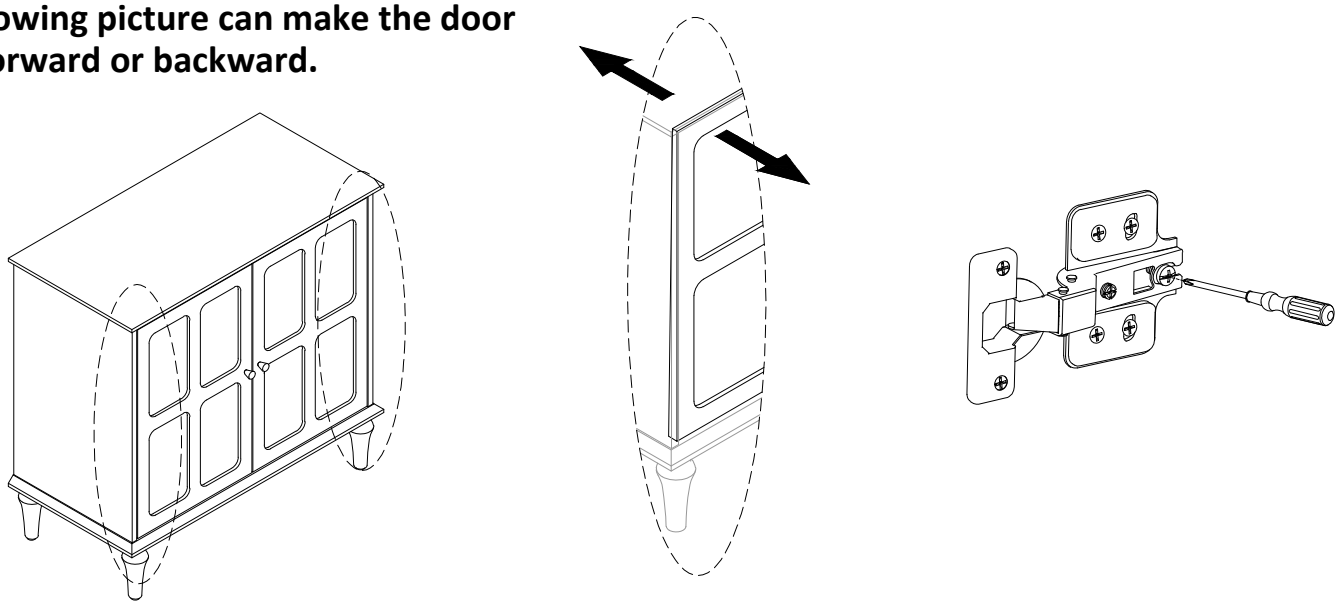

Tips：Adjusting the levelers appropriately underneath the bottom of the foot can make the gaps between the door and frames of cabinet even.

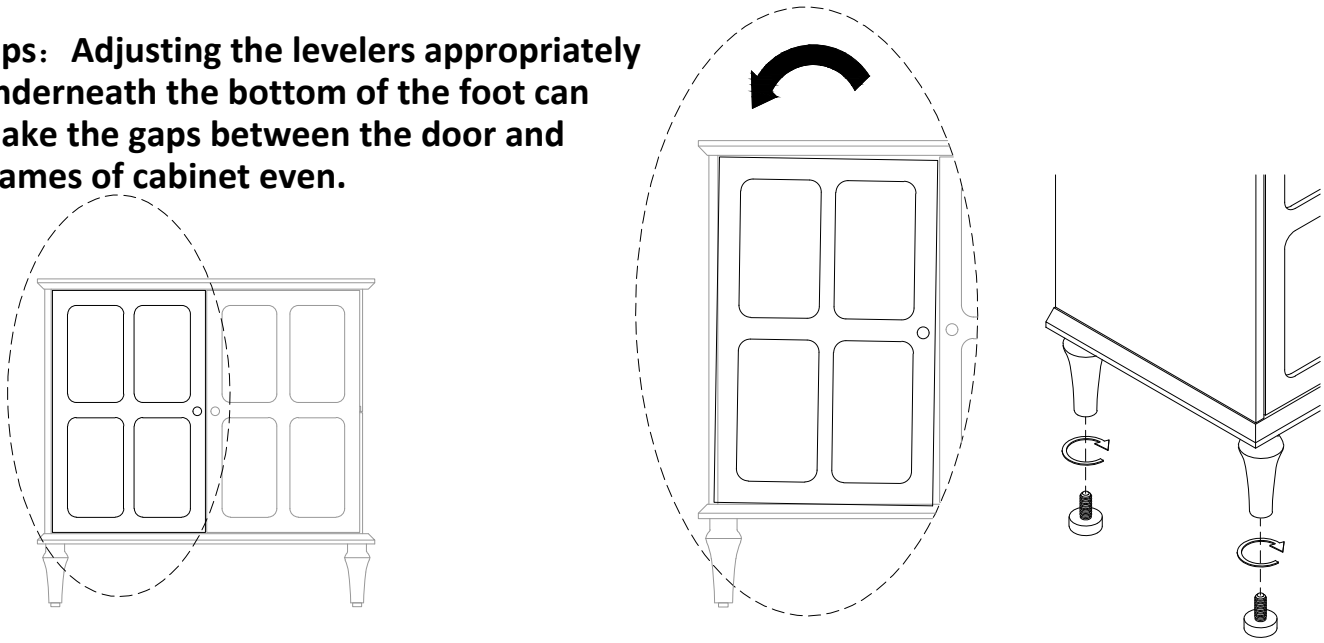

13

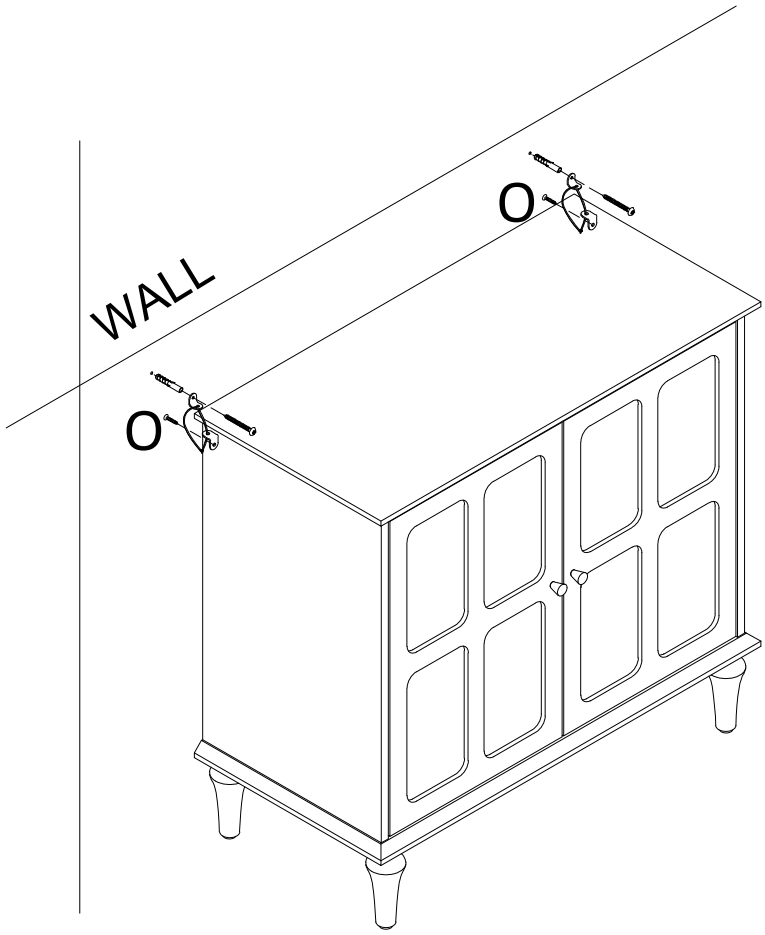
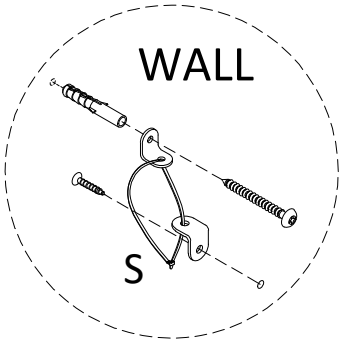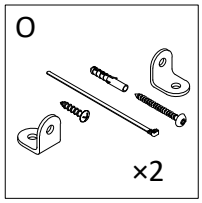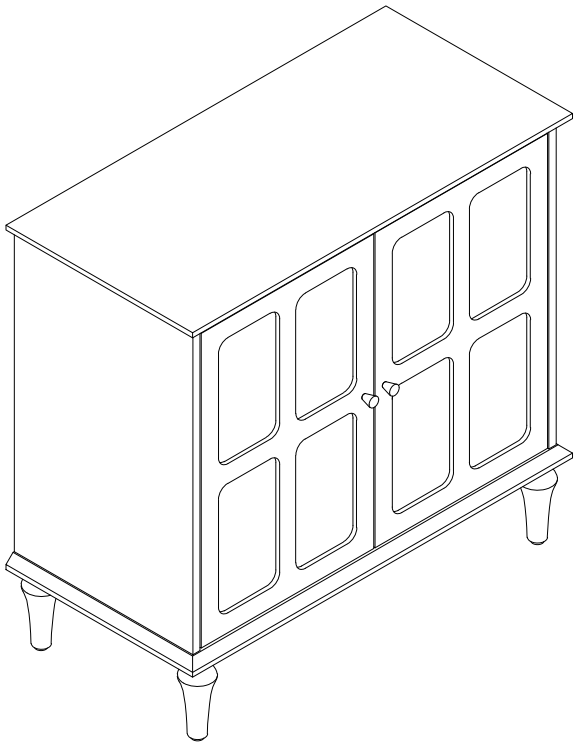
Turn the screws vertically from slow to fast.