Installation instructions

A  X 1	B  X 1	01 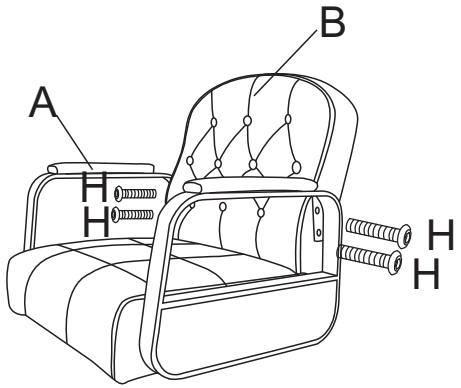	02 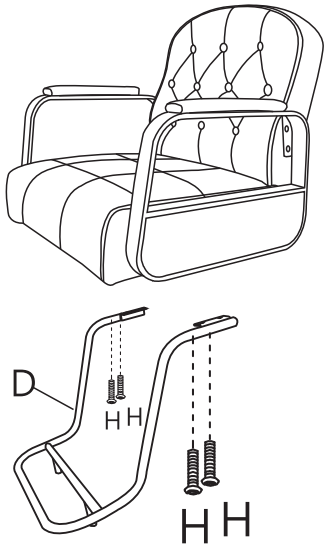	03 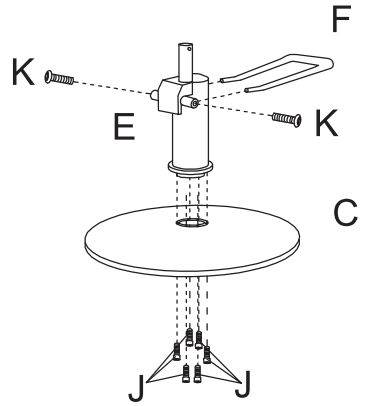
C  X 1	D  X 1			
E 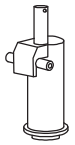 X 1	F  X 1			
G 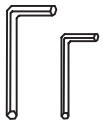 X 1	H 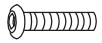 X8	04 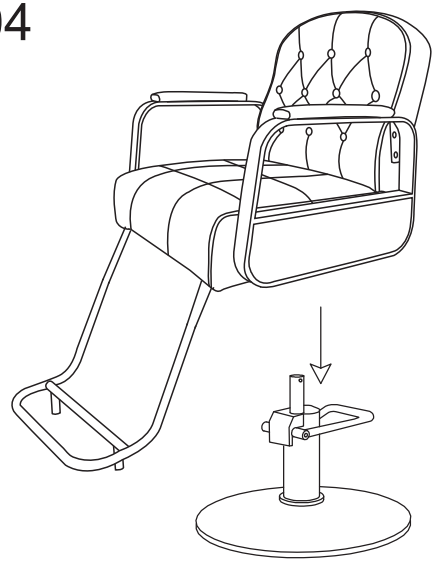	05 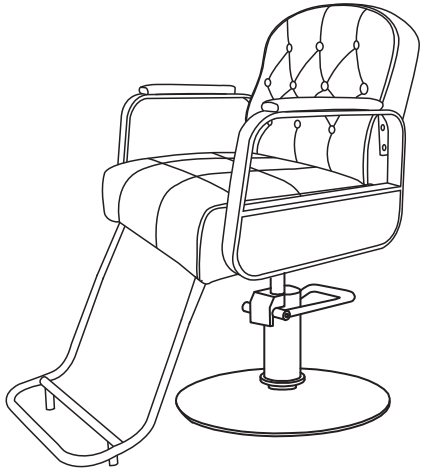	
J  X 6	K X 2			