RUSTIC FLOWER CART RAISED GARDEN BED

Review all assembly and care information before using this product. Save this manual for future reference.

Assemble components on a soft,clean surface to avoid damaging the finish

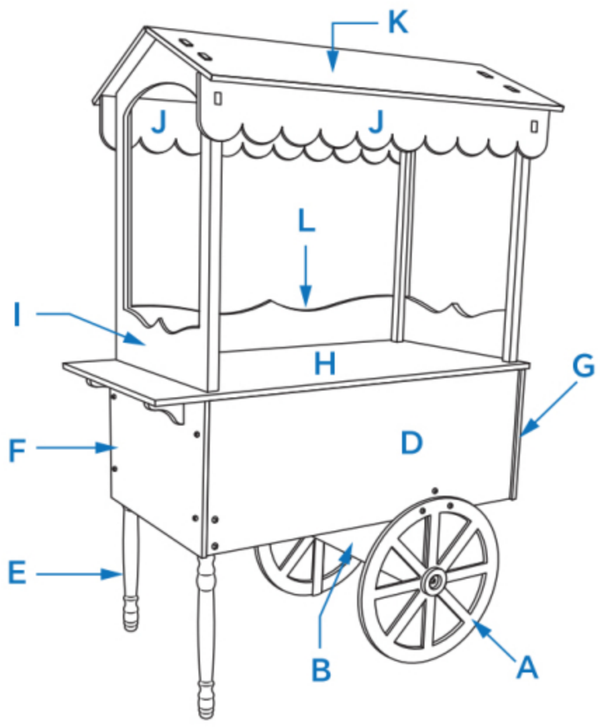

Tools Required (not included)			
O	Screw M6-25*18	S	Hexagonal screwdriver*2
P	Screw M6-35*4	R	Screw M6-35*2

No.	Parts	Qty.
A	Wheel*2	2
B	Wheel connecting plate*1	1
C	Left side panel*1	1
D	Right side panel*1	1
E	Table leg*2	2
F	Front side panel*1	1
G	Rear side panel*1	1
H	Table top panel*1	1
I	Arch Panel*2	2
J	Flower panel*2	2
K	Roof*2	2
L	Joint Panel*1	1
M	Decorative panel*1	1
N	Decorative panel base*3	3

⚠WARNING:

Manufacturer and seller expressly disclaim any and all liability from personal injury, property damage or loss, whether direct or indirect, or incidental, resulting from the incorrect attachment, improper use, inadequate maintenance, or neglect of this product.

⚠ WARNING ⚠

CHOKING HAZARD — This item contains small parts that can be swallowed. Keep children and pets away during assembly.

ASSEMBLY

Review all steps and understand assembly before beginning.

Do not fully tighten hardware until all components have been loosely assembled.

STEP 1

Attach wheel (A) and table leg (E) to (C,D) using screws (P) and (R)

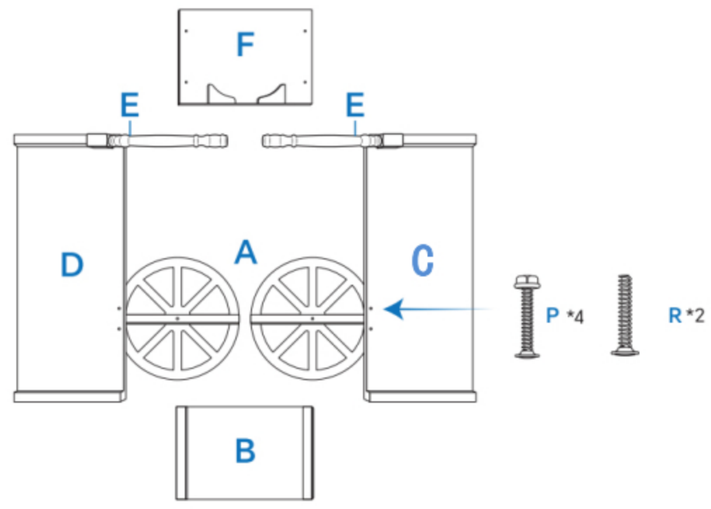

STEP 2

Attach the wheel attachment plate (B) to both sides of the wheel using the screws (R).

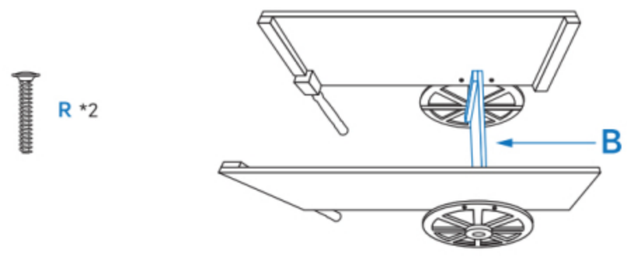

STEP 3

Secure (F,G) panels with screws (O)

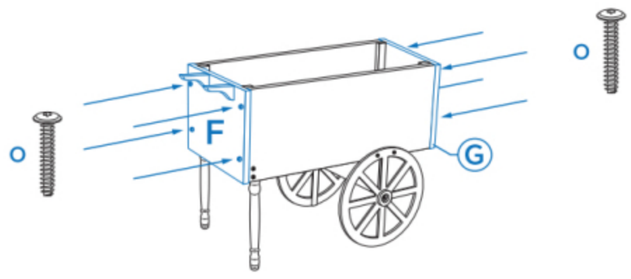

STEP 4

Combine the countertop panel (H), the arch panel (I) and the connecting panel (L), and then use the screws (O) to reinforce (I,L).

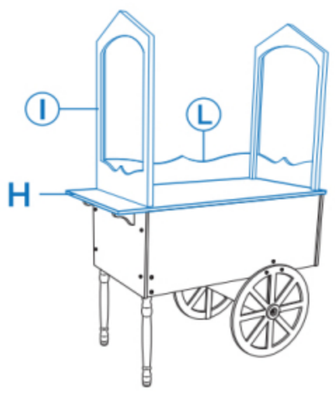

STEP 5

Attach the flower plate (J) to the arch panel (I) and fasten it.

