ASSEMBLING INSTRUCTION

Please assemble according to the steps and angles in the manual

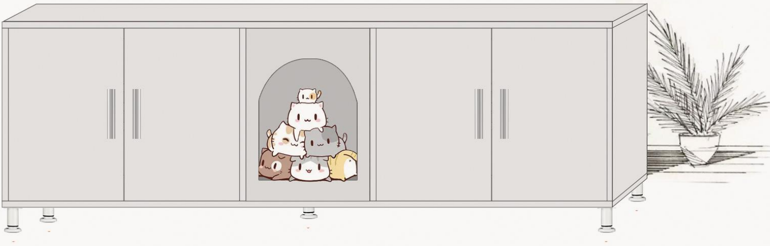

PARTS

Tip:If you cannot find the number posted on the board, please try to identify it based on the hole characteristics.

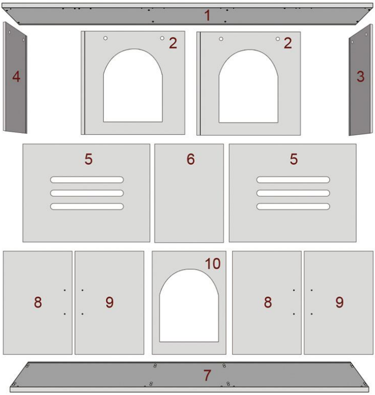
1
2
2
4
3
5
6
5
10
8
9
8
9
7

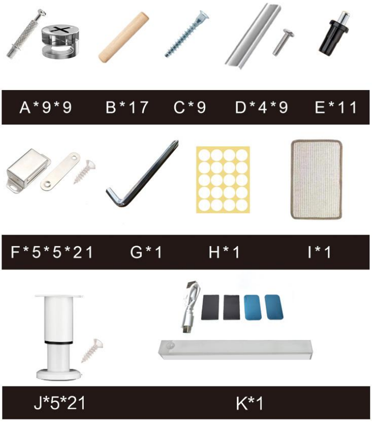
A*9*9
B*17
C*9
D*4*9
E*11
F*5*5*21
G*1
H*1
I*1
J*5*21
K*1

1

Assembling the top panel

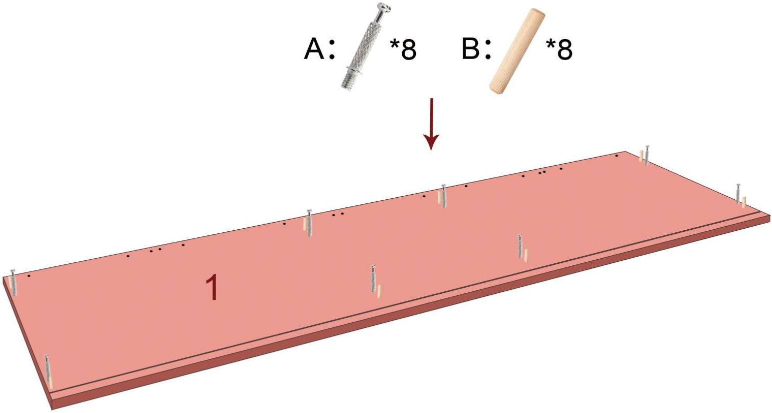

2

Assembling the entrance panel

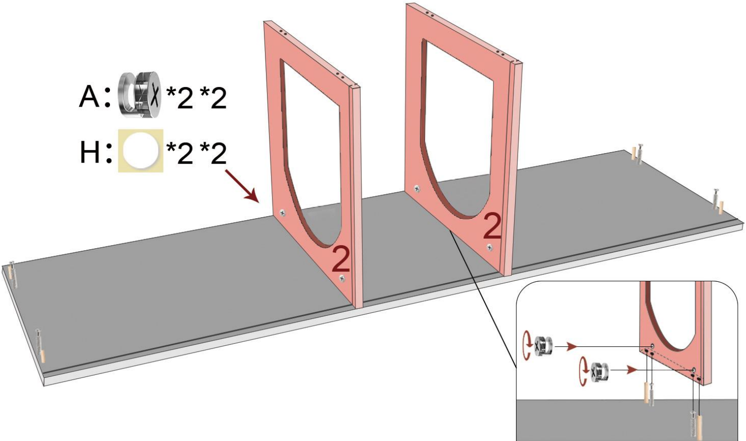

3 Assembling the right side panel

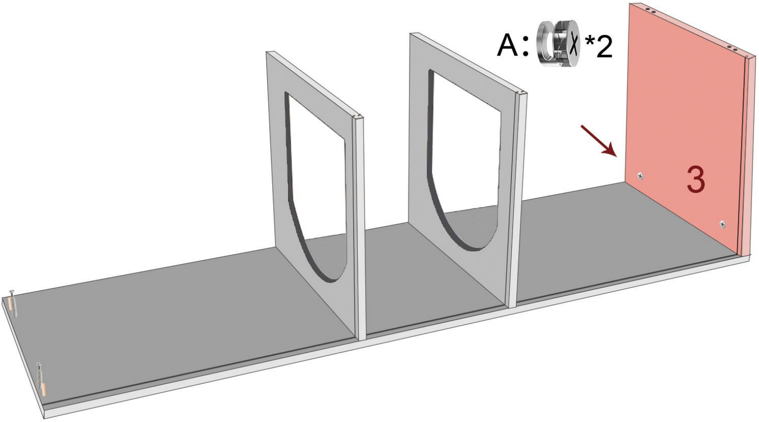

4 Assembling the left side panel

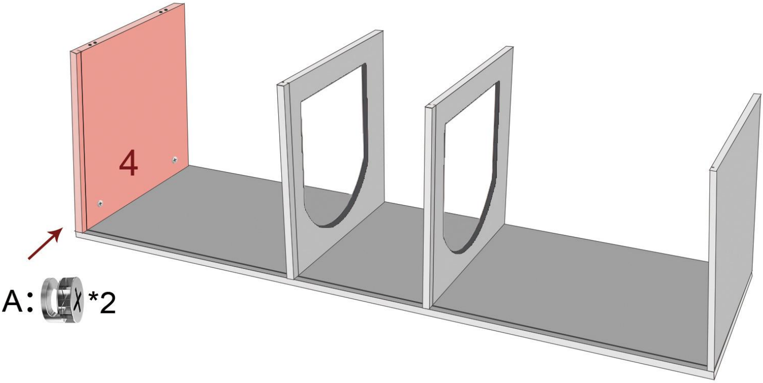

5 Assembling the back panel

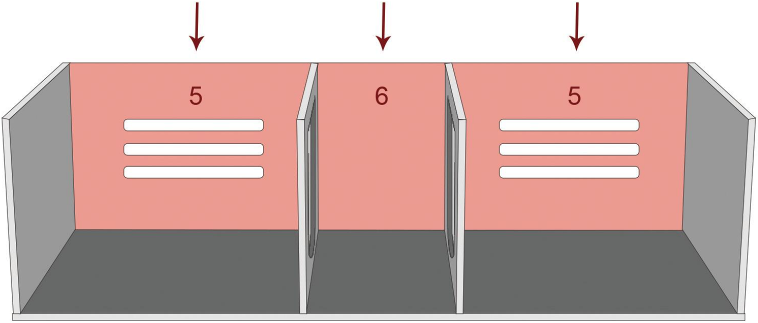

6 Assembling the bottom panel

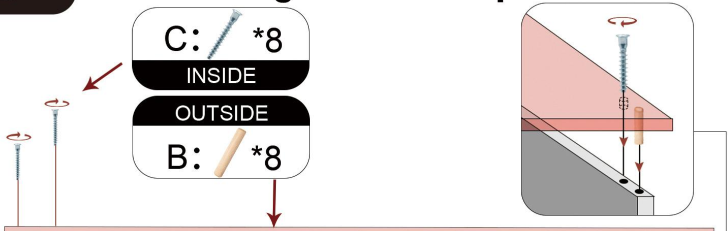
C: *8
INSIDE
OUTSIDE
B: *8

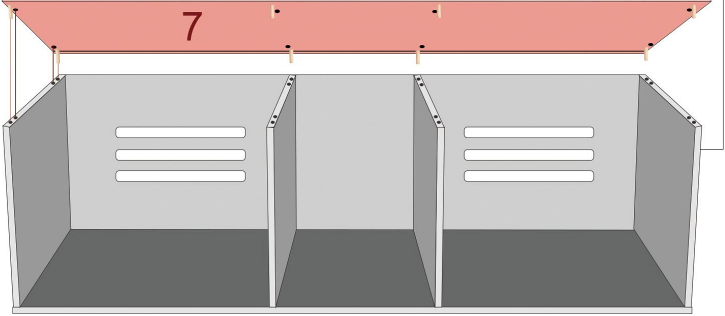

7 Assembling the magnets & the feet

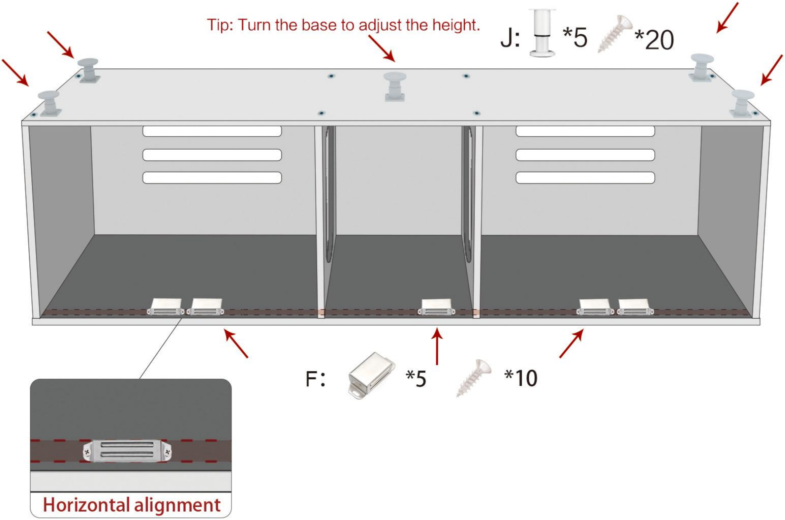
Tip: Turn the base to adjust the height.
J: *5
*20
F: *5
*10
Horizontal alignment

8 Assembling the left doors

Tip:Turn the cabinet over so the top is facing up

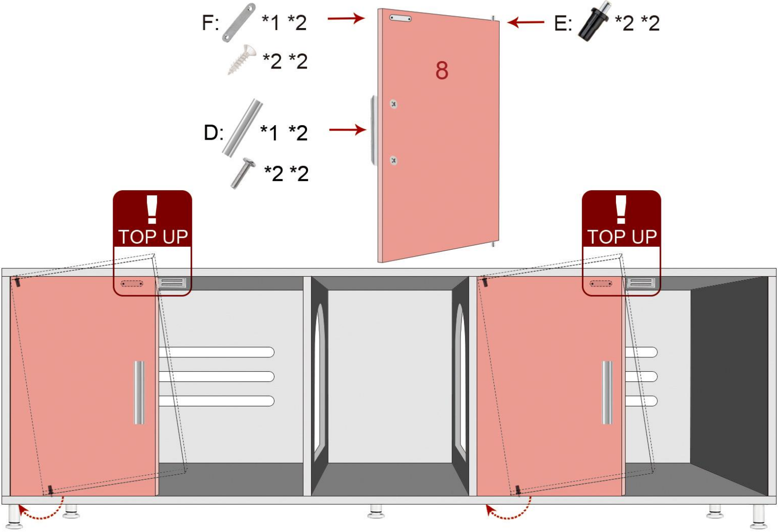
F: *1 *2
*2 *2
D: *1 *2
*2 *2
8
E: *2 *2
TOP UP
TOP UP

9 Assembling the right doors

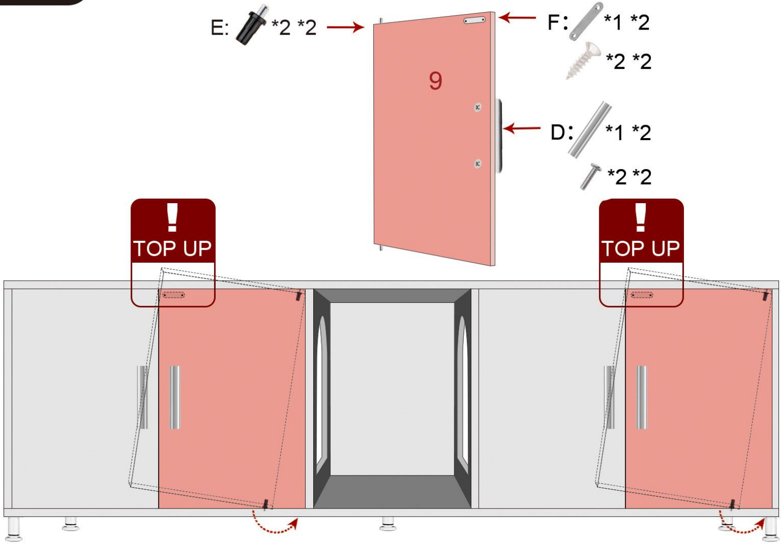
E: *2 *2
9
F: *1 *2
*2 *2
D: *1 *2
*2 *2
TOP UP
TOP UP

10 Assembling the arch door

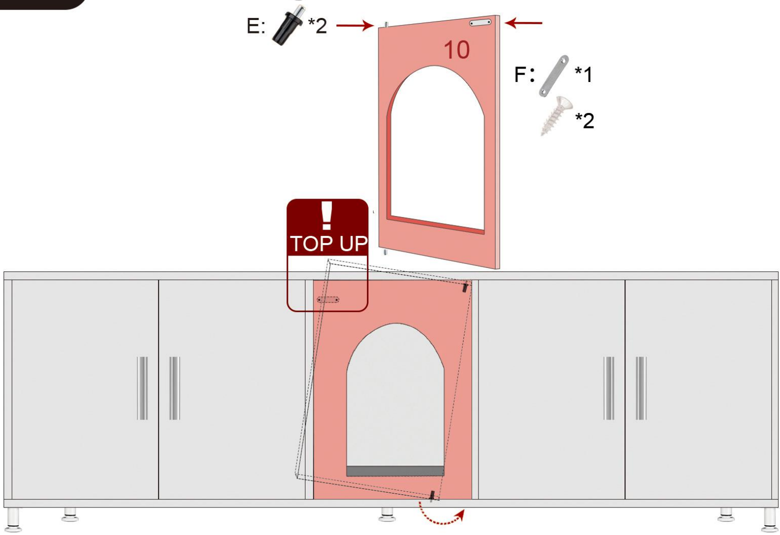
E: *2
10
F: *1
*2
TOP UP

11 Assembling the lamp and cat pads

Steps:

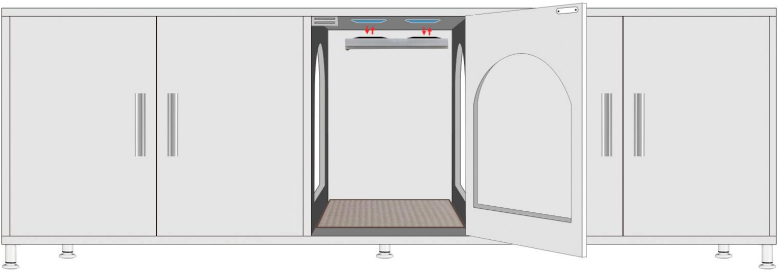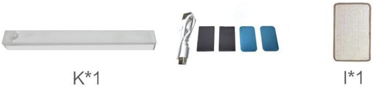1. You can tear the glue sticker of the black magnet and stick to the back of the lamp, then suck the blue steel plate on the magnet(Do not tear the glue sticker).
2. You can tear the glue stickers of the blue steel sheet, and then paste the lamp to the installation location.
3. You can unload the lamp at any time for charging (See the packaging instructions for the use of the lamp).