Owner Manual

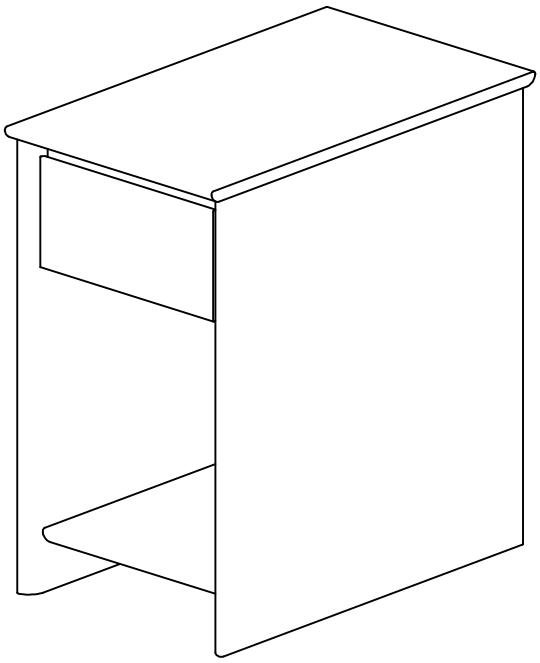

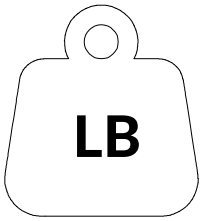

Per Seat Weight Limitation

100 LBS

Thank You For Choosing Our Furniture

If you have any questions or concerns, don't hesitate to reach out to us.

NOTE:
This brochure contains IMPORTANT safety info. Please read and keep it for future reference.

MAINTENANCE AND WARNINGS

Before You Start

Please follow the steps below:

⚠ Check the packaging for any damage, deformation, or water stains. If there is significant damage, please contact us promptly.

⚠ Open the packaging and confirm that the panels, hardware, screws, etc are complete.

⚠ Please read the installation instructions carefully to understand the installation steps and precautions to ensure proper installation.

⚠ Clean the installation area in advance and ensure the ground is level and there is enough space to avoid damaging the furniture or making installation difficult.

⚠ Lay a protective mat on the ground to prevent scratching the floor during installation.

After-Sales Service

- If you encounter any issues or need technical support during use, please contact our after-sales team.We offer long-term maintenance and warranty services.

Precautions

⚠ This product for indoor use only. Do not expose it to outdoor elements or high-humidity environments.

⚠ Keep the product away from high heat or open flames to prevent fire nazards.

⚠ Do not allow children to climb on the product to prevent personal injury caused by tipping

Safety Warnings

⚠ If you notice any loose or damaged parts,stop using the product immediately and contact customer service.

⚠ Do not attempt to disassemble or replace any components yourself,as this may affect the stability and safety of the product.

Daily Maintenance

- Regularly clean the surface of the sofa with a soft cloth to prevent dust accumuation.
- Do not use cleaning agents containing acids,alkalis,or corrosive substances, as they may damage the surface. It is recommended to use neutral cleaning agents or specialized furniture cleaners
- Avoid exposing furniture to humid environments for extended periods to prevent swelling or deformation of the boards. Use a dehumidifier or desiccant during humid weather.
- Avoid direct contact of furniture with water.If water is accidentally spilled, wipe it dry immediately.
- Avoid placing excessively heavy objects on the furniture: ensure the weight is within a reasonable load-bearing range.
- Avoid using sharp or rough items on the furniture surface to prevent scratches, Handle items gently when moving them

Explosive view

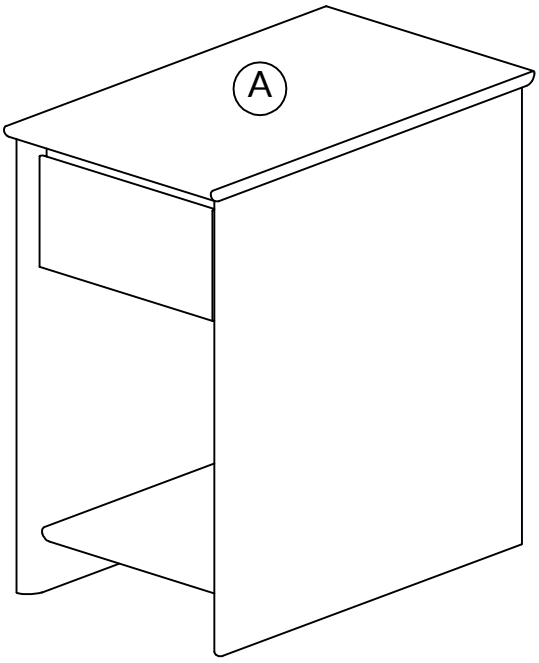

Parts list

A 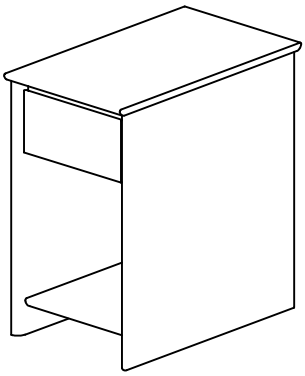 x1	

Installation:
15minutes.

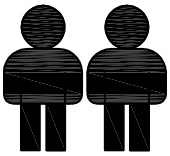

Two Person

Hardware List

1 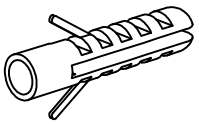 x2	2 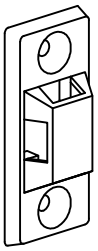 x2	3 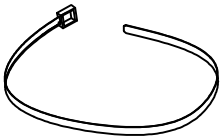 x1
4 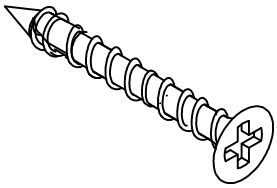 x2 D4x38mm	5 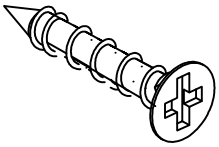 x2 D3x20mm	6 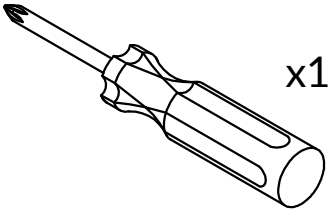 x1 Not including

Step 1

Use screw #5 to attach plastic bracket #2 to panel (A), make sure all holes aligned and tighten screw #5 with screwdriver #6.

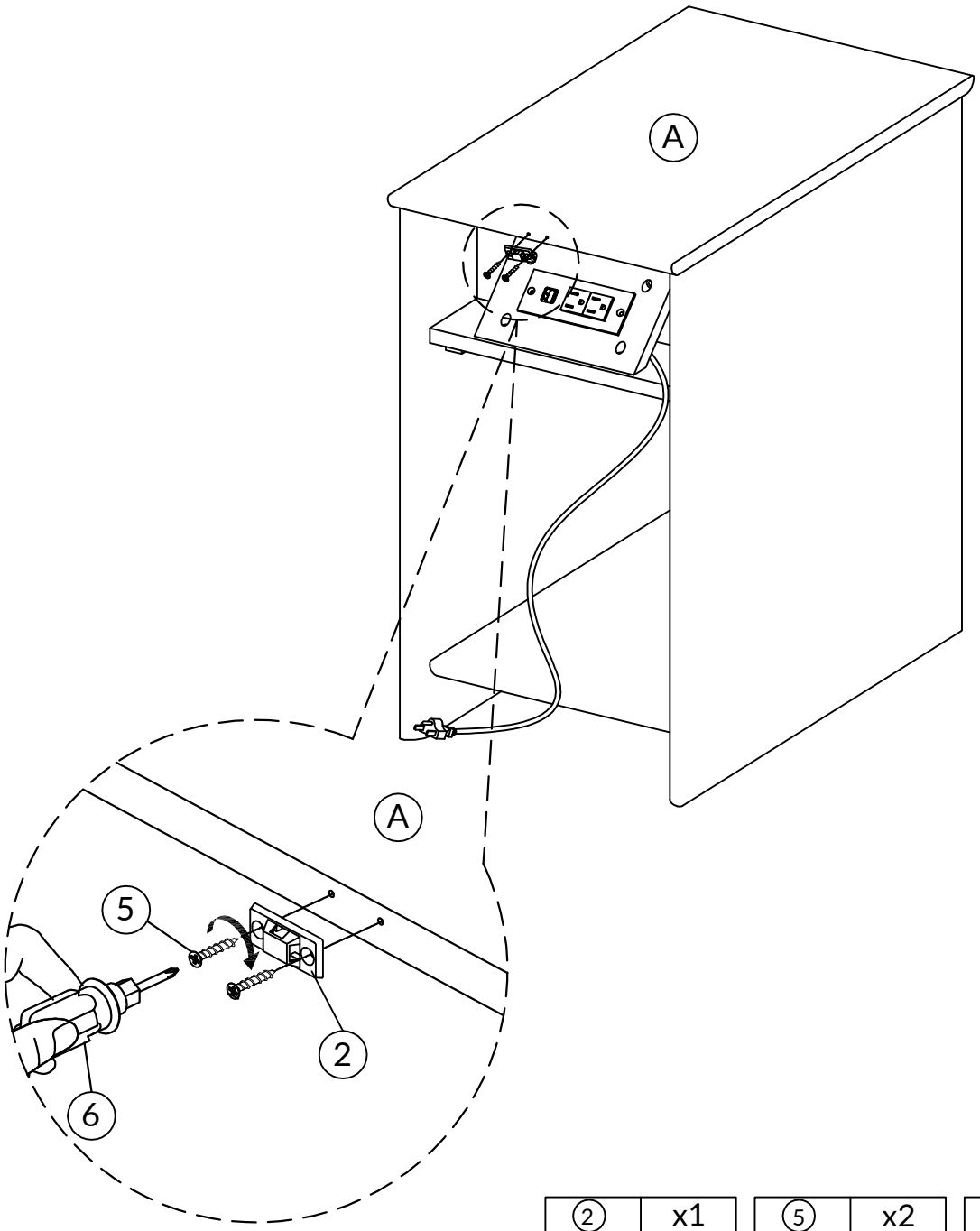

2	x1

5	x2
D3x20mm	

6	x1
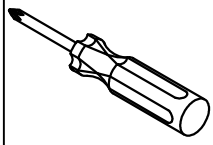	
Not including	

Step 2

①	x2	②	x1	④	x2	⑥	x1
				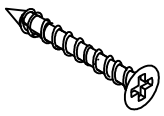	D4x38mm	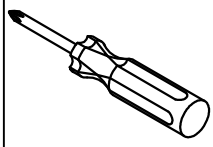	Not including

1.Install the anti-collapse device.
2.Mark the position on the wall, that corresponds to the location of part 2 on the of panel (A); Drill and insert the expandable screw 1 by hammer.
3.Assemble the part 2 to the wall. Align the hole in the part 2 with the expandable screw 1, use screw 4 to attach it and tighten by screwdriver 6.

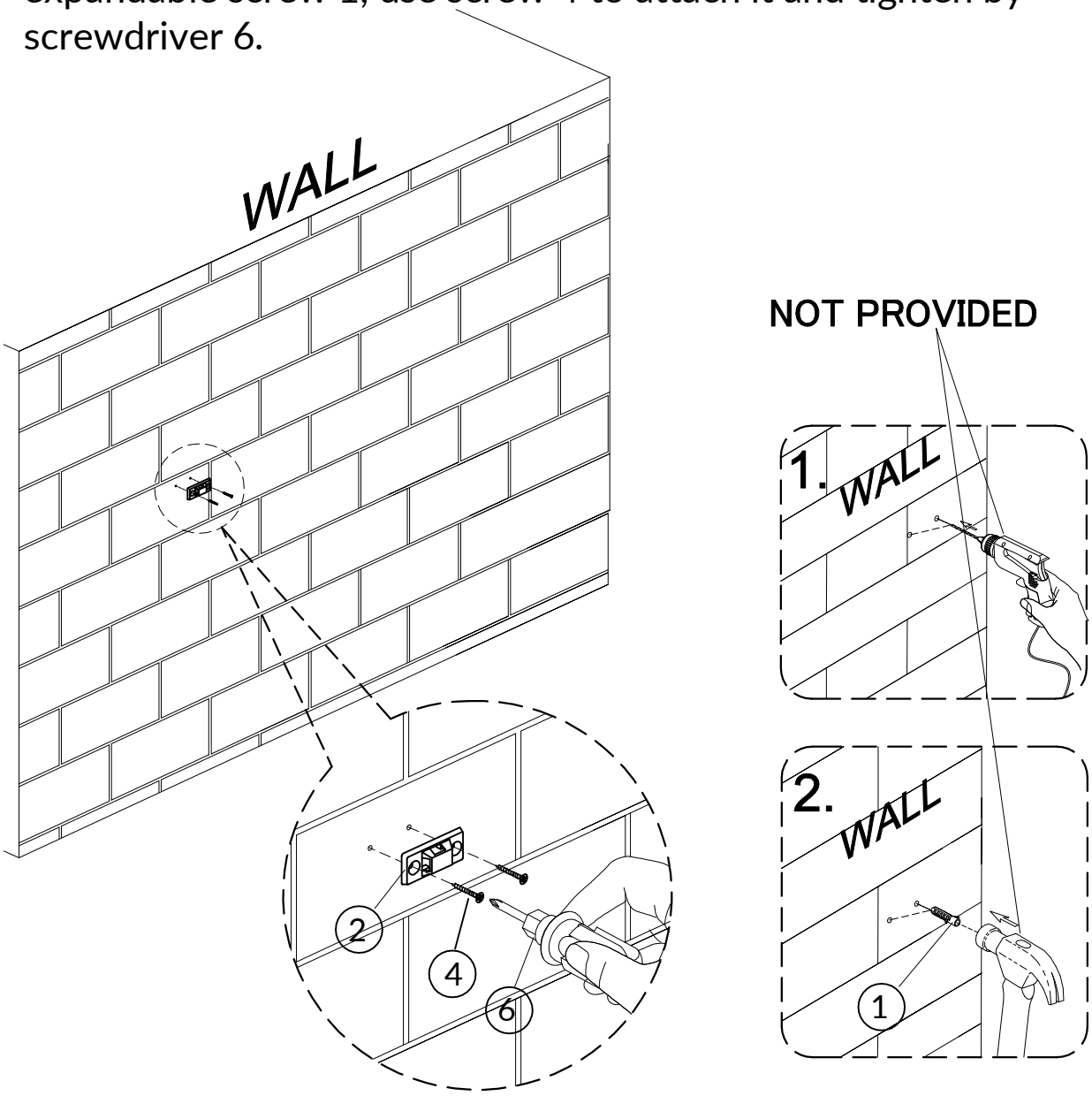

Step 3

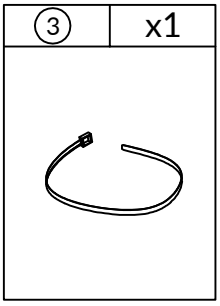

Let the plastic belt 3 pass through the both part 2 and pull tightly.

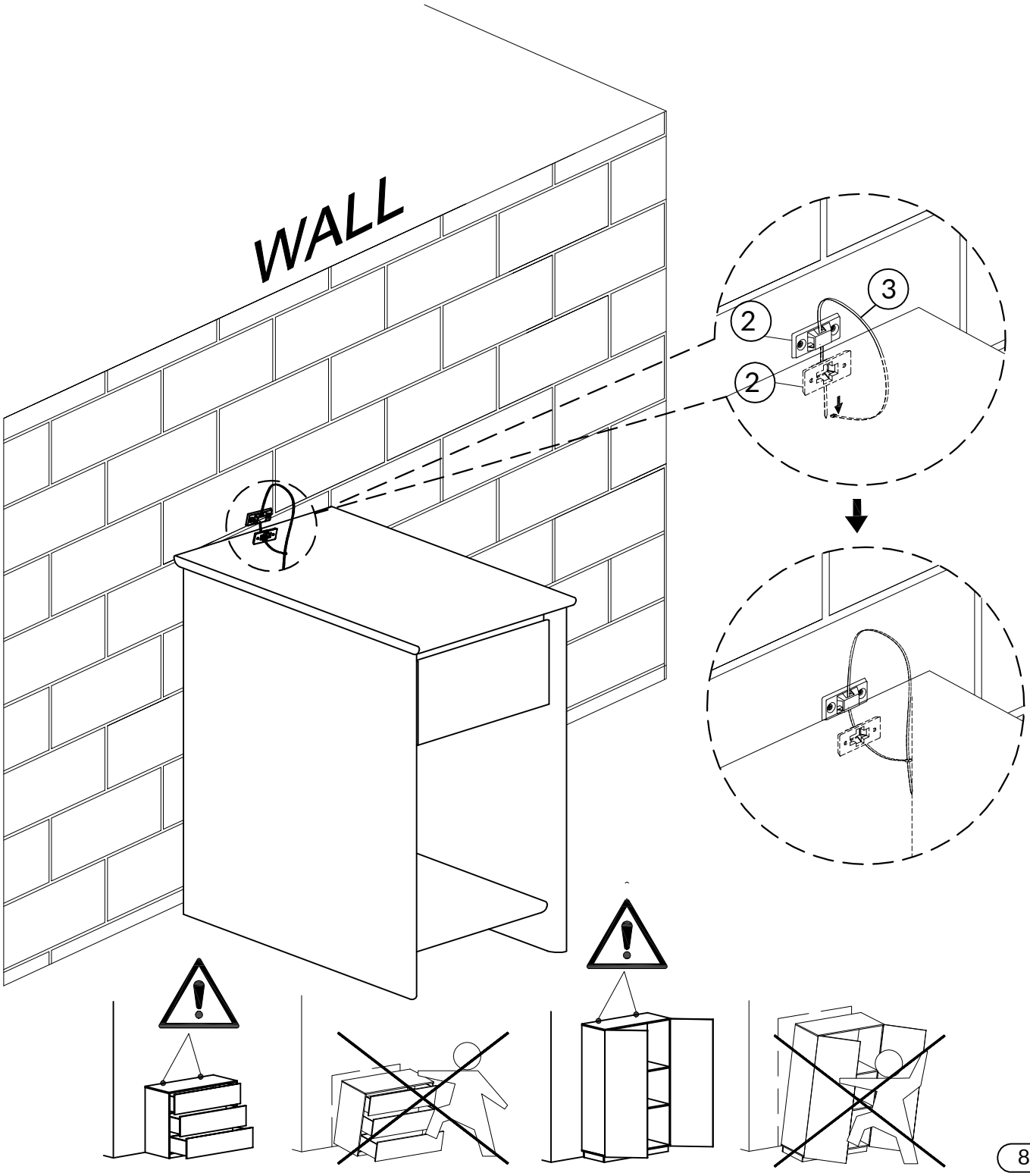

WARRANTY

- We strive to offer quality products, and we also try our best to satisfy every customer who orders from us with products or services as needed.

- We provide 30 days warranty starting from the time you receive the item. Each customer must provide a record of their orders such as the order number, or item receipt for any items that are out of the warranty period you may also still receive.

- Replacement parts by purchasing them from our company if they are available.

- For return,please check the return policy with the retailer or market place you bought from

Appreciate your purchasing from us.
Pop up your life by our furniture piece!