ASSEMBLY INSRTRUCTION
BAUANLEITUNG

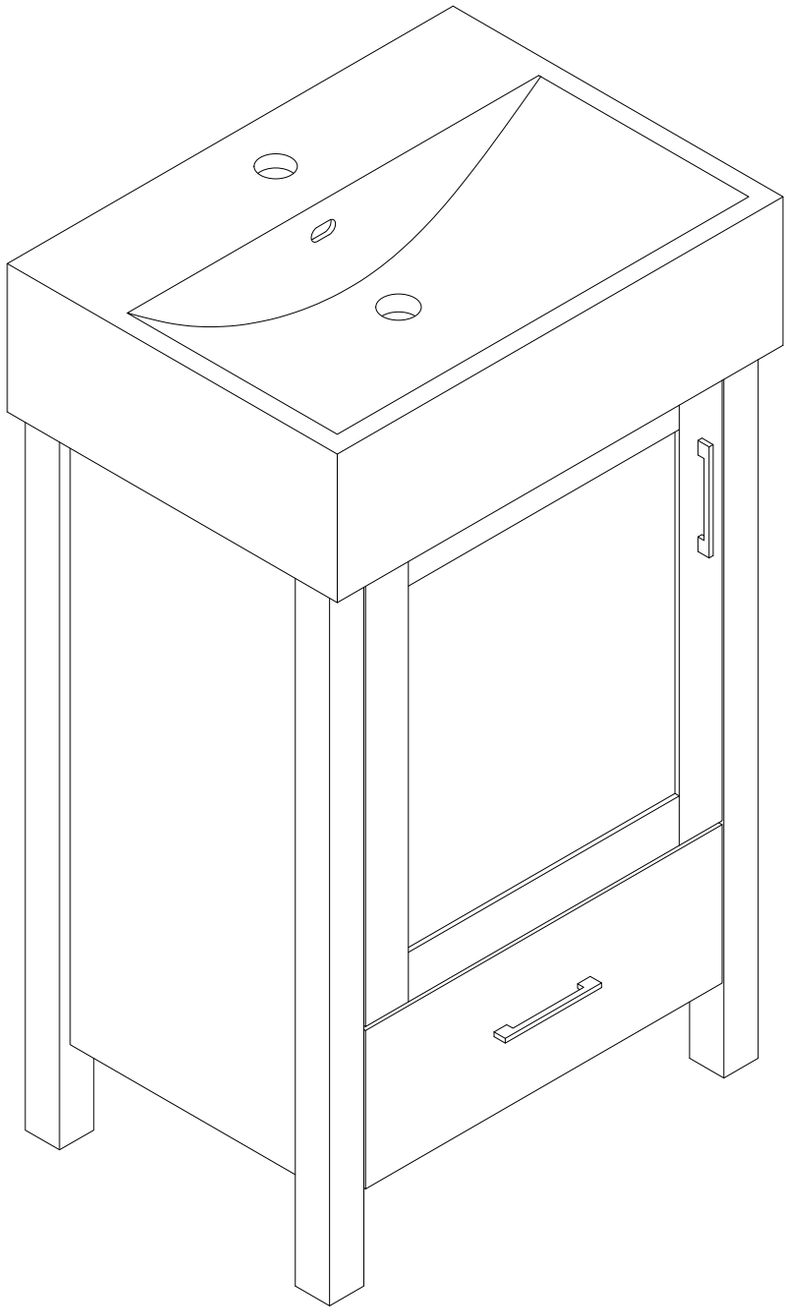

Before Installation

Important-Please read these instructions fully before starting assembly

Thank you for purchasing this quality product.Be sure to check all packing materials carefully for small parts,which may have come loose inside the carton during shipment.Identify and count all items according to the PARTS LIST and/or HARDWARE LIST shown below.Check you have all the components and tools listed on the following pages.

•We recommend that you assemble this product with the assistance of another person;this will make the assembly easier,and will help eliminate damage to the product or injury to persons during assembly.

•Please do not over tighten screws or bolts until the assembly is completed.

•Keep children and animal away from the work area,small parts could choke if swallowed.·Please put all parts on a non-abrasive floor before assembly,and follow the assembly steps to assemble your newly purchased product correctly and efficiently.

Cam Lock Assembly Instructions

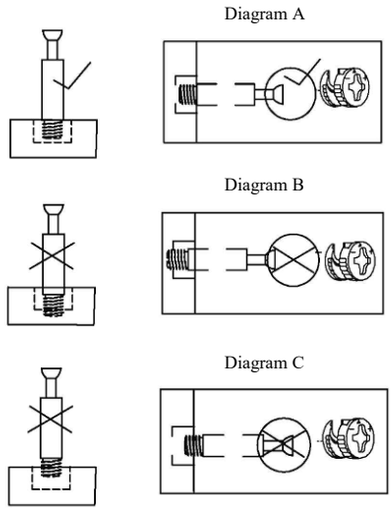

Insert Cam Bolt into hole as shown in diagram A.

Make sure not to insert the Cam Bolt:
Too deep as shown in figure B as this will cause the Cam Lock to be misaligned and unable to interlock properly.

Also avoid inserting the Cam Bolt too close to the surface of the hole as shown in figure C,as this will cause the Cam Lock to be too loose,and not interlock properly.

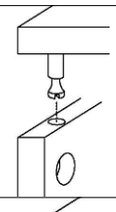

Connect the panels together.

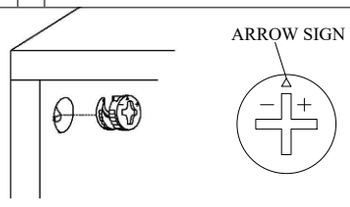

Insert the Cam Lock so the side opening fits over the head of the Cam Bolt.

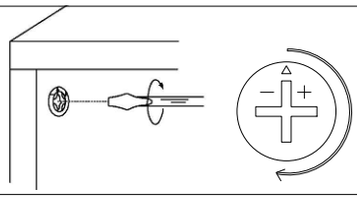

To tighten the Cam Lock,turn it clockwise on half a turn with a flat screwdriver.
*Do not use an automatic screwdriver as it may bend or break if too much power is imposed.

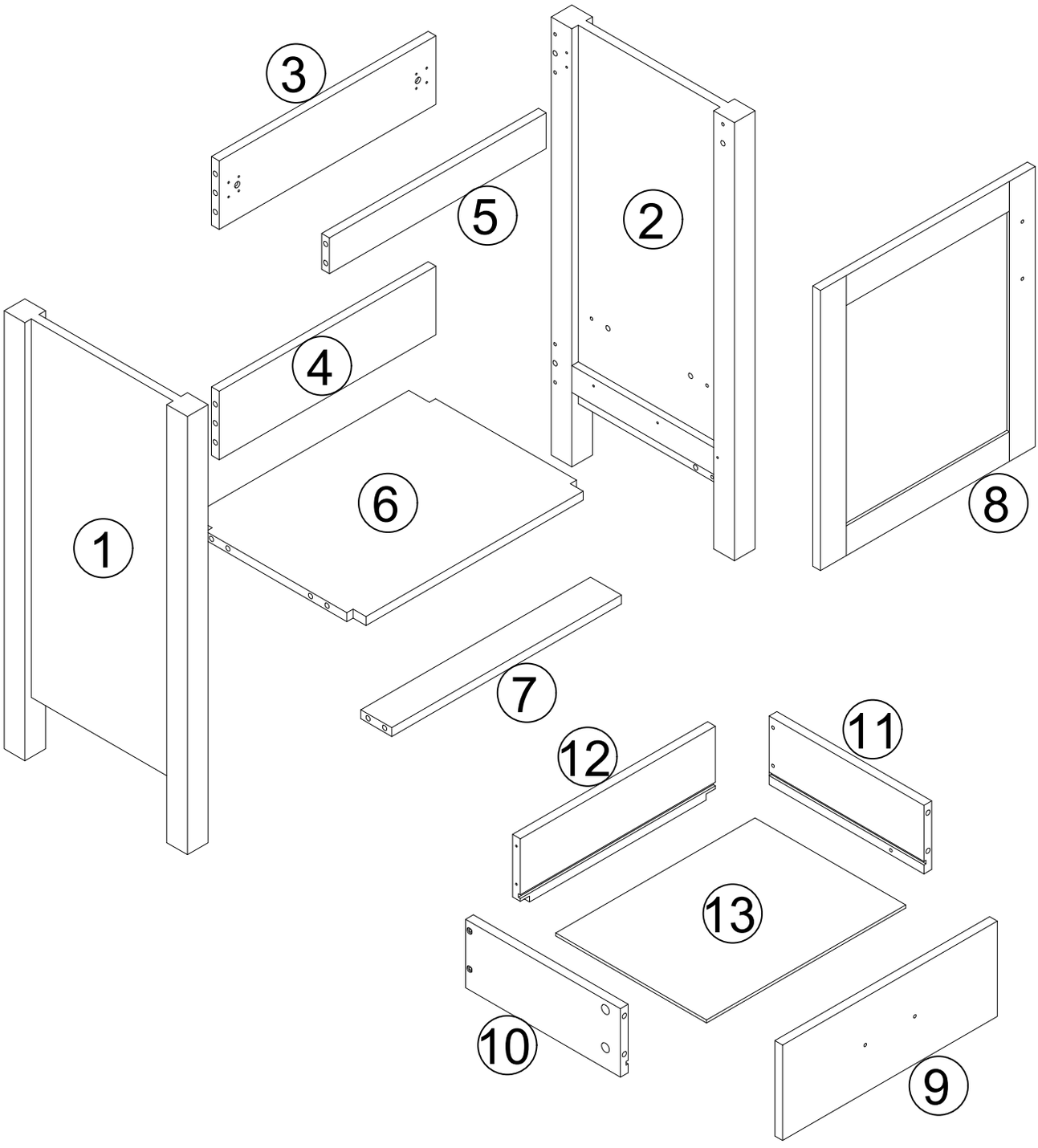
3
5
2
4
6
8
1
7
12
11
13
10
9

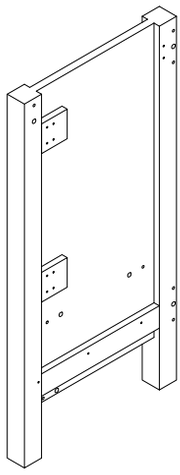	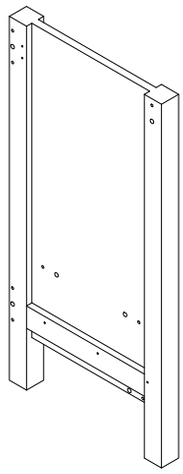	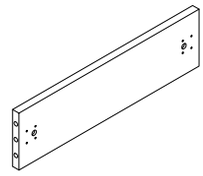
① x 1	② x 1	③ x 1
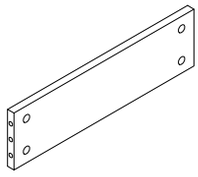	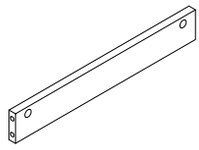	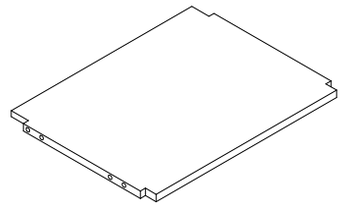
④ x 1	⑤ x 1	⑥ x 1
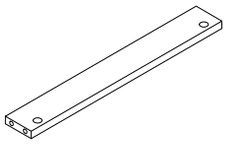	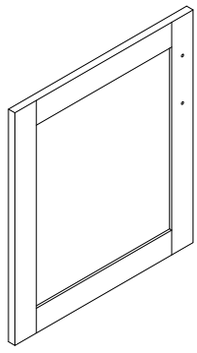	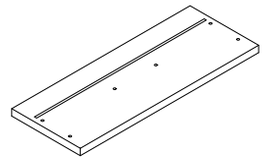
⑦ x 1	⑧ x 1	⑨ x 1

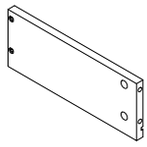	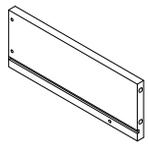	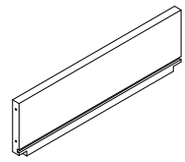
⑩ x 1	⑪ x 1	⑫ x 1
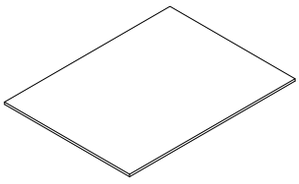		
⑬ x 1		

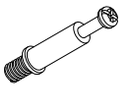 Φ6x35mm	Φ15x12mm	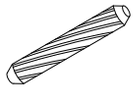 Φ8x30mm	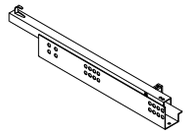	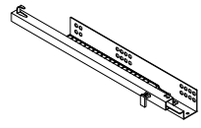	
A x 20+2	B x 20+2	C x 12+1	D x 1	E x 1	F x 2
M4x14mm	M4x14mm	M4x18mm	M4x35mm	M6x60mm	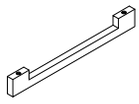
G x 12+1	H x 18+1	I x 4	J x 4	K x 2	L x 2
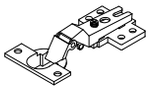	Φ8x40mm				
M x 2	N x 2	O x 4			

Step 1

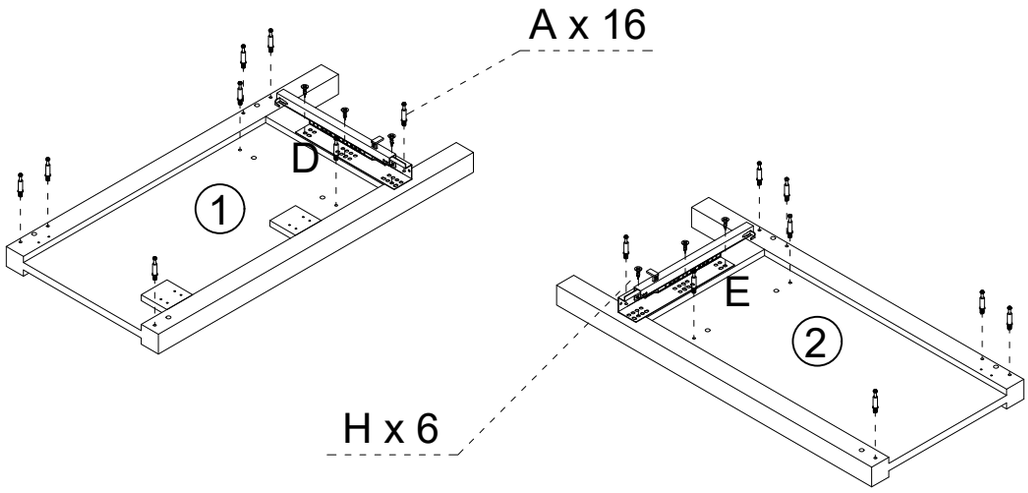
A x 16
D
1
E
2
H x 6

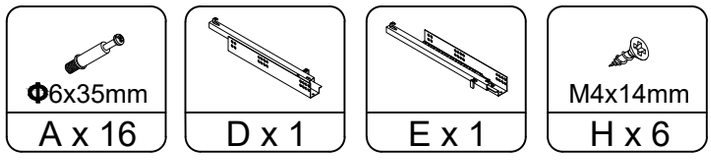
Φ6x35mm
A x 16
D x 1
E x 1
M4x14mm
H x 6

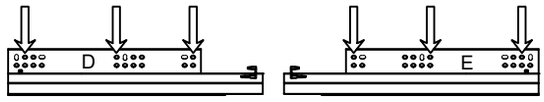
D
E

Step 2

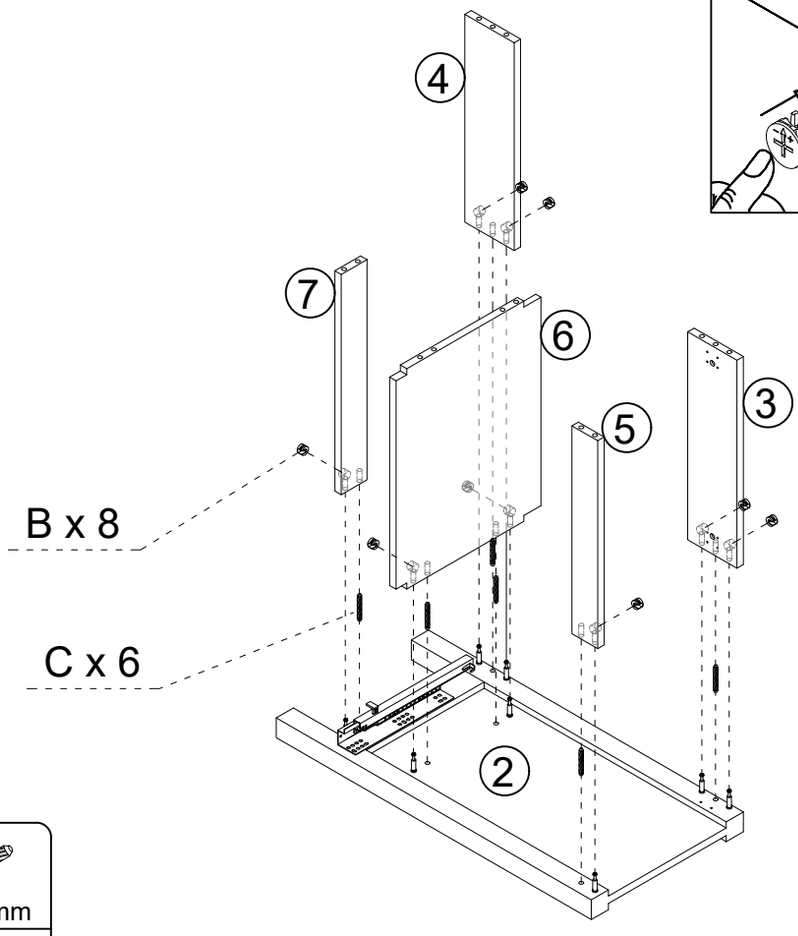
4
7
6
5
3
B x 8
C x 6
2

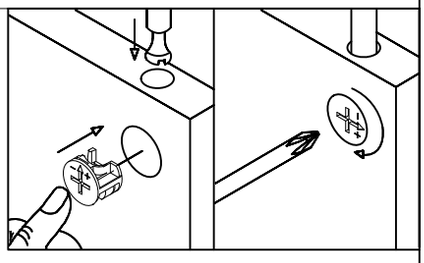

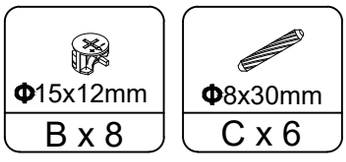
Φ15x12mm
B x 8
Φ8x30mm
C x 6

Step 3

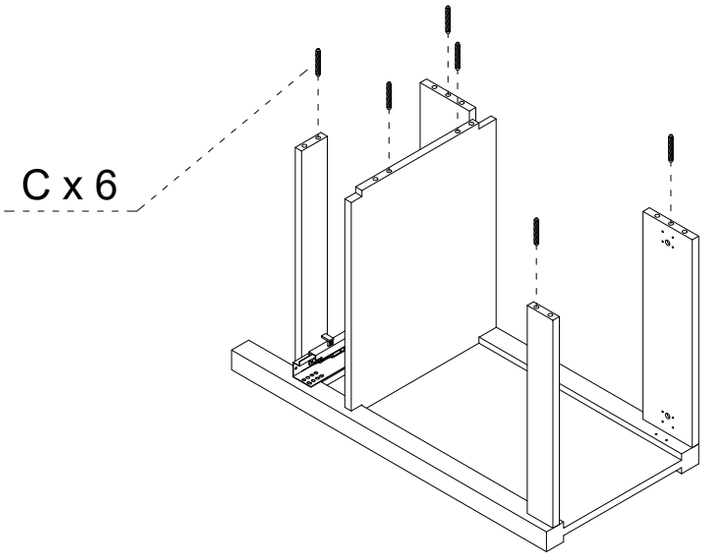

Φ8x30mm

C x 6

Step 4

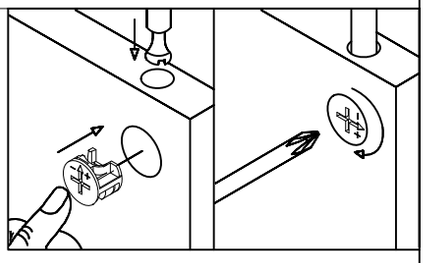

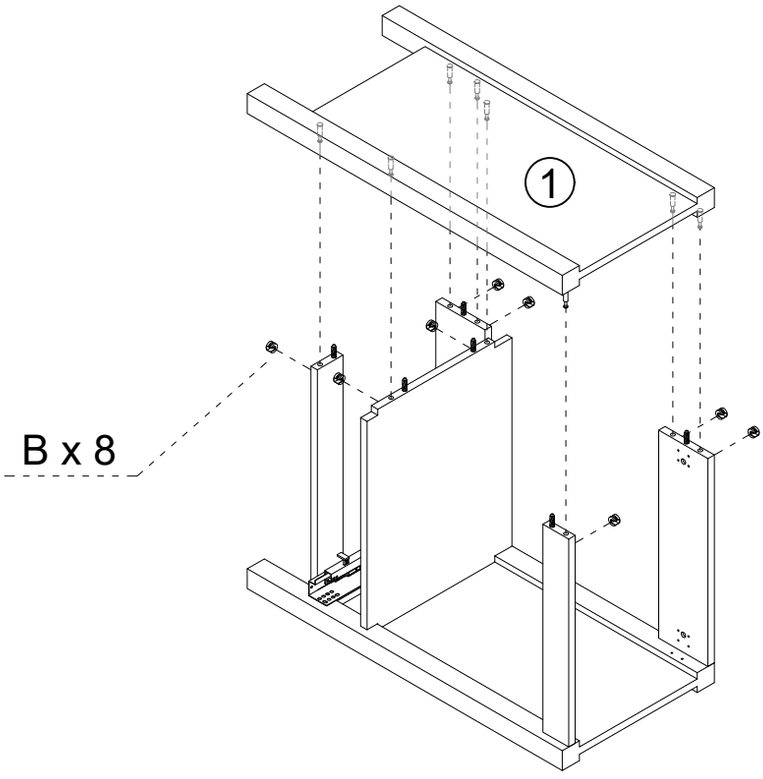

Φ15x12mm

B x 8

Step 5

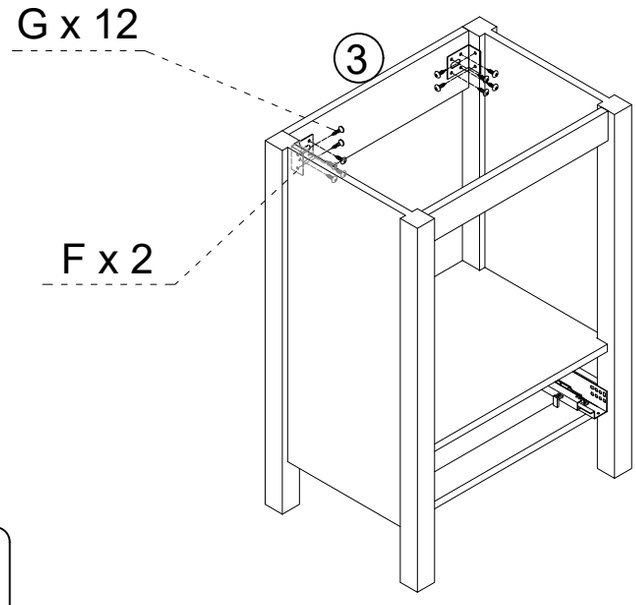

F x 2

M4x14mm

G x 12

Step 6

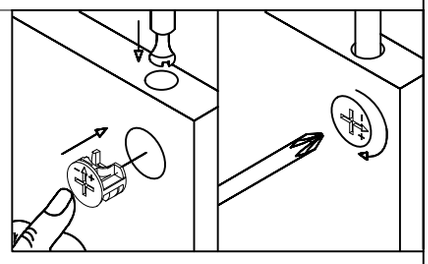

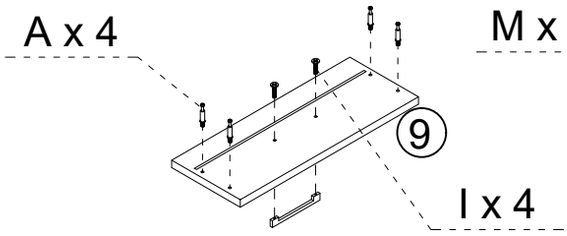

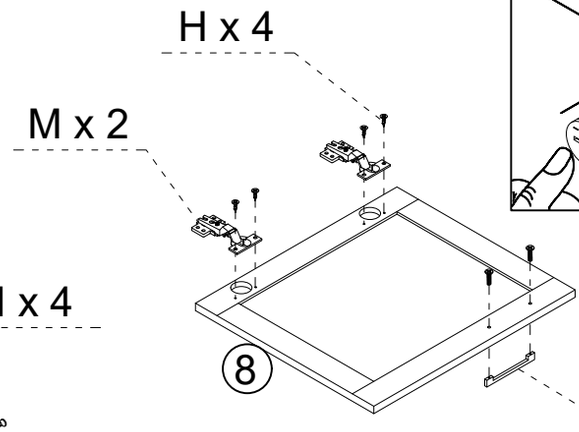

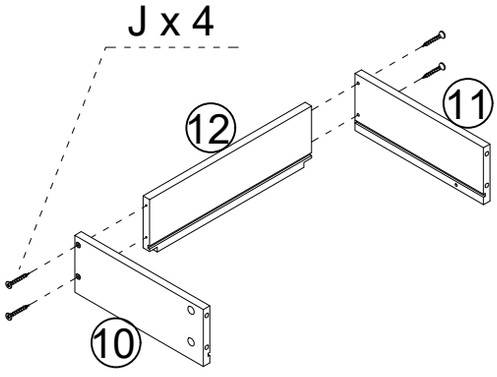

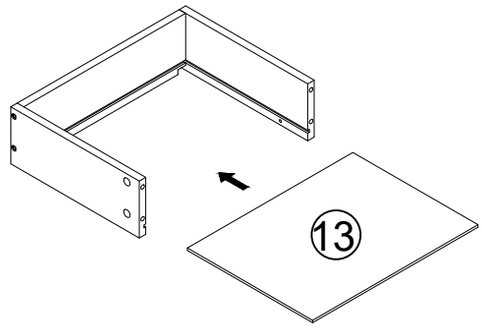

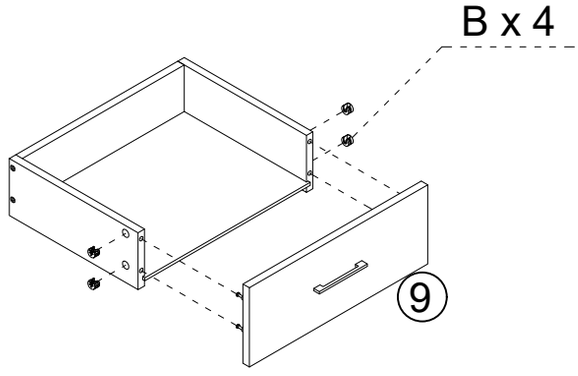

Φ6x35mm

A x 4

Φ15x12mm

B x 4

M4x14mm

H x 4

M4x18mm

I x 4

M4x35mm

J x 4

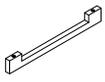

L x 2

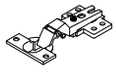

M x 2

Step 7

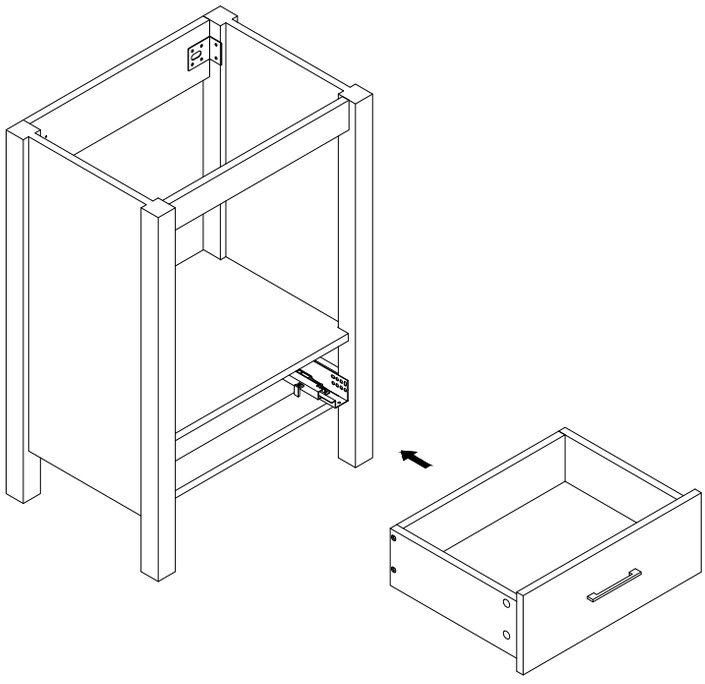

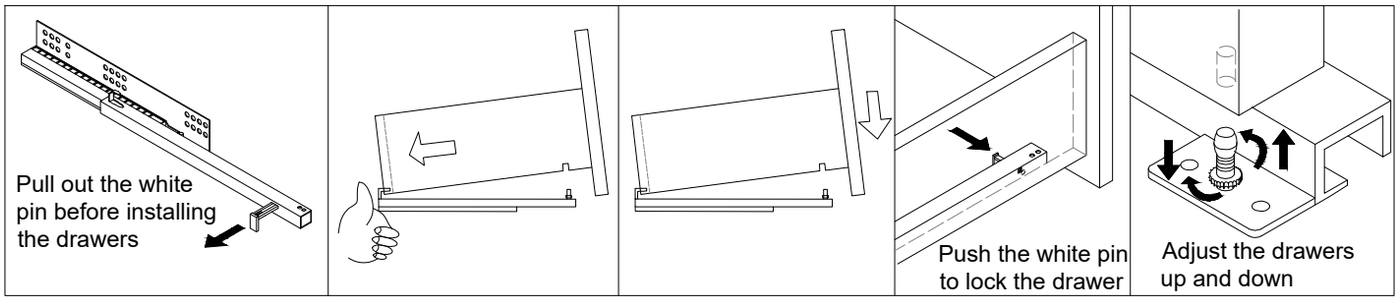

Step 8

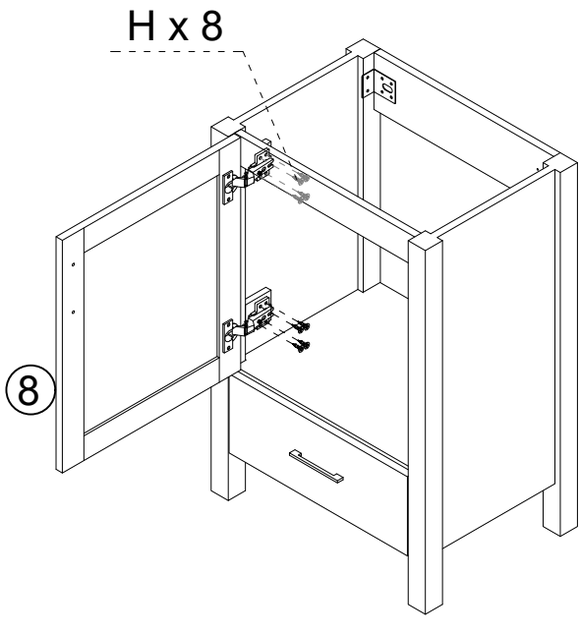

SETTINGS DOORS

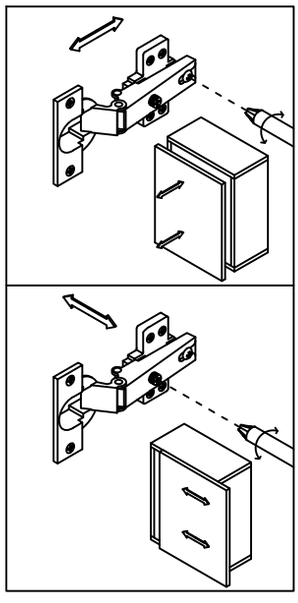

If the hinge holes are notaligned, you can tryadjusting the front and rear hinges.

If the door gap is large,you can adjust the hinges left and right

M4x14mm
H x 8

Step 9

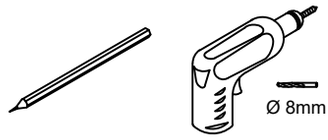

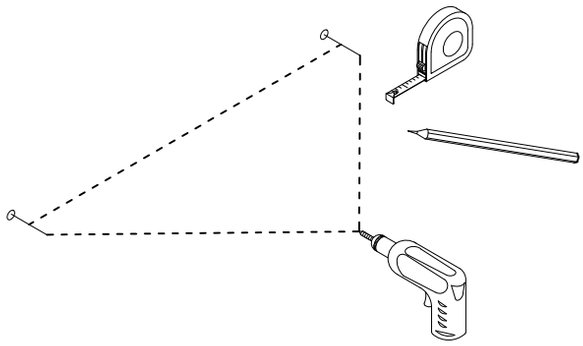

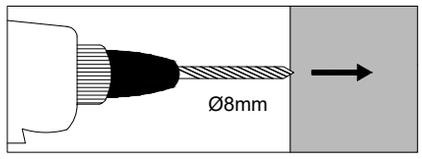

Step 10

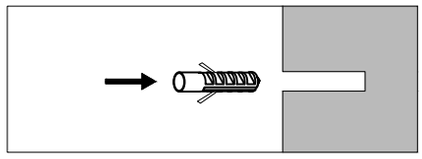

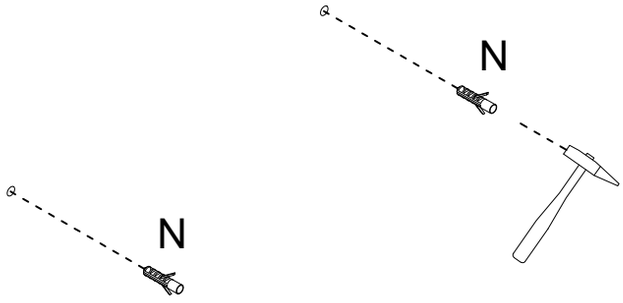

Φ8x40mm

N x 2

Step 11

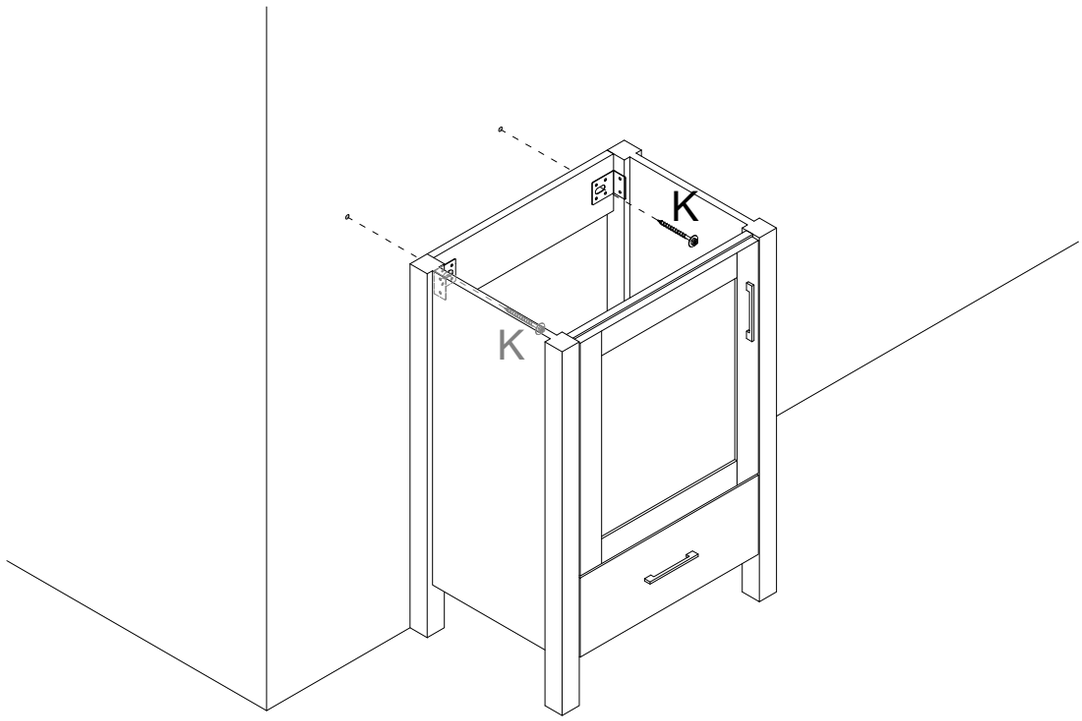

Step 12

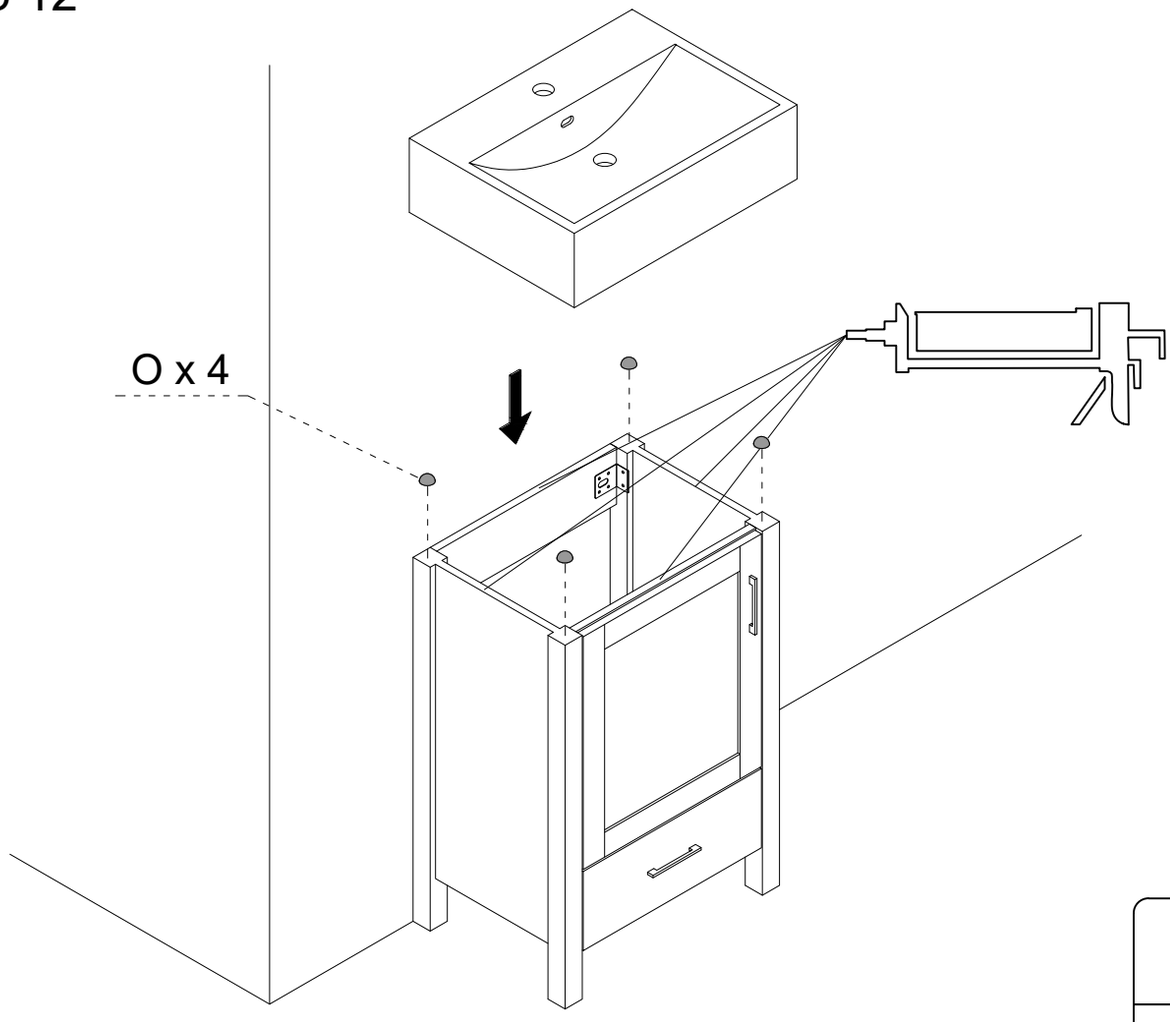

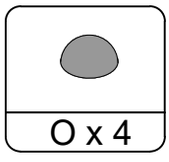
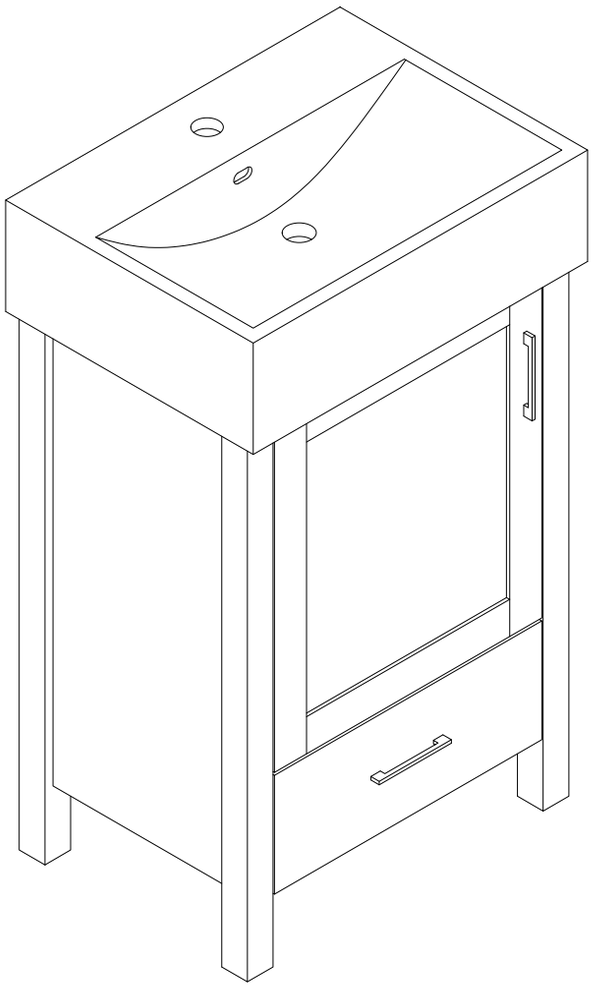
Step 13