MADE IN CHINA

29008-4BK

OPERATIONS MANUAL

4MODERN HOME

Assembly & Installation Instructions

Dear Customer:
Thank you for your business!
If you have any questions or problems, please send us an email to support@4modernhome.com or call us at 469-312-6428. We will do everything possible to make you completely satisfied with your purchase. Product reviews help future customers to make their purchase decision. You are encouraged to share your experience by leaving a short product review on the platform where you bought this product.
Thank you!
4ModernHome

Warning: If any special control devices are used with this fixture, follow the instructions carefully to assure full compliance with N.E.C.requirements. If there are any questions, contact a qualified electric contractor.

Warning: California Residents Proposition 65 This product contains lead, a chemical known to the state of California to cause cancer and birth defects or other reproductive harm. Do not place the product in your mouth. Wash your hands after handling this product.

Caution: It is highly recommended to get an electrician to install this light. Please make sure to turn the electricity off at the main circuit breaker before beginning installation. All glass is fragile.Use care when handling glass component(s)and/or lamp(s).

Step4

Lock the crossbar to the junction box of theceiling by using 2 pcsof 5/32 screws in the accessories bagBConnect the wires. The hot/positive wire (+) hasan "L" label on it The other one is the negativewire (-). And the bare cooper is the ground wire.Attach the canopy to the ceiling with screws

Step3

Lock the Canopy plateand Lamp arms together

Step2

Fix the lamp arm and crystal lamp body together with screws

Step1

The boom is installed on the lamp body, and then the lamp body is locked on the suction top plate

Step5

Install 4 E12 bulbs

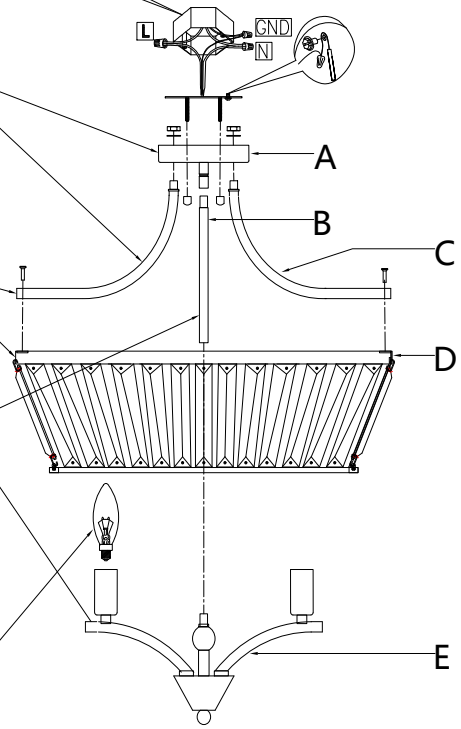

WIRE CONNECTION DIAGRAM

Wires meeting safety standards are required to connect the electrical circuit.

CAUTION: Risk of fire

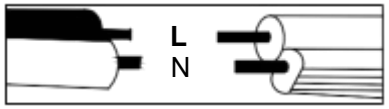

Please read all instructions carefully. Before you proceed to install, make sure that the power supply is turned off and remains off until installation is completed.

PARTS INCLUDED

Code	Part Description	QTY
A	Suction Cup	1
B	Straight tub	1
C	Decorative bend	4
D	Crystal ring	1
E	Modulator body	1