IMPORTANT INSTRUCTIONS AND OPERATING MANUAL

ELECTRIC FIREPLACE

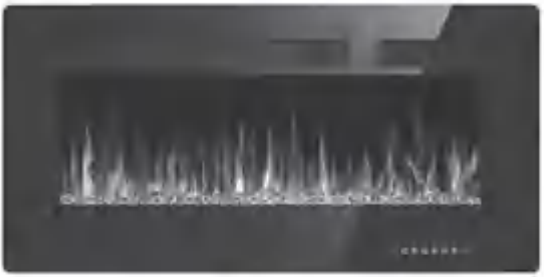

30-LTFP-C1/36-LTFP-C1
42-LTFP-C1/50-LTFP-C1
60-LTFP-C1/72-LTFP-C1

NO VENTING REQUIRED	
WARNING	Read and understand this entire owner's manual, including all safety information before plugging in or using this appliance. Failure to do so could result in fire, electric shock, or serious personal injury.

Phone:3022415039/6605538327
Email:aftersale@sannwsginc.com
Please contact us by phone or email.

After-sales phone service hours:
US Central Time: 19:00-23:00
Seattle time: 17:00-21:00
US Eastern Time: 20:00-00:00
Toronto time: 20:00-00:00
Germany time: 8:00-11:00
After-sales mailbox service time: 7*24 hours

TABLE OF CONTENTS

IMPORTANT SAFETY INSTRUCTIONS **4**

1.0 PACKING LIST **6**

1.1 DIMENSIONS 8

2.0 ELECTRICAL INSTALLATION NOTES **10**

2.1 GENERAL INSTRUCTIONS 10

3.0 INSTALLATION INSTRUCTIONS **11**

3.1 UNPACKING AND TESTING APPLIANCE WALL 11

3.2 GROUNDING APPLIANCE 11

3.3 ASSEMBLY 12

Wall Hanging 13

Built in Construction 17

4.0 FINISHING **20**

5.0 OPERATING INSTRUCTIONS **20**

5.1 MAIN POWER BUTTON 20

5.2 CONTROL PANEL / REMOTE CONTROL OPERATION 20

5.3 REMOVE CONTROL 22

6.0 TROUBLE SHOOTING GUIDE **23**

7.0 MAINTENANCE **25**

7.1 PARTIALLY REFLECTIVE GLASS CLEANING 25

7.2 SCHEMATIC DIAGRAM 26

8.0 LIMITED WARRANTY **26**

9.0 Q&A AND CONTACT INFORMATION **27**

IMPORTANT SAFETY INSTRUCTION

⚠ WARNING

These instructions should be carefully read before installation. The booklet must be kept and delivered to the new user. The Manufacturer reserves the right to vary the features of the product without prior notice. The technical data are indicative only.

1. THIS APPLIANCE IS HOT WHEN OPERATED AND CAN CAUSE SEVERE BURNS IF TOUCHED.
2. Do not operate appliance before reading and understanding instructions. Failure to operate appliance could cause fire or injury.
3. This heater is hot when in use. To avoid burns, do not let bare skin touch hot surfaces. Keep combustible materials, such as furniture, pillows, bedding, papers, clothes, etc. and curtains at least 3 feet (0.9 m) from the front of the heater and keep them away from the sides and rear (sides and rear restrictions apply to location dedicated heaters only).
4. Risk of burns. Please do not touch the appliance directly after use and cooling it for a while. Please turn off the control and then remove plug if you want disconnect power of appliance.
5. Do not install damaged or incomplete components.
6. Extreme caution is necessary when any heater is used by or near children or invalids and whenever the heater is left operating and unattended.
7. Do not install damaged, incomplete or substitute components.
8. To prevent accidental swallowing, small kits should be kept away from children and infants.
9. There is a battery in the remote control Please keep away from children.
10. Do not install battery in the wrong direction, put it close to fire or mix with other type of batteries.
11. Ensure you have adequate safety measures to protect infants/toddlers from touching hot surfaces.
12. It is imperative that the control compartments, circulating blower and ventilation channel in the appliance are kept clean. The appliance should be inspected before use and serviced by a qualified service person once a year.
13. Under no circumstances should this appliance be modified.
14. Do not use this appliance if any part has been in contact with water. Please call a qualified service technician to inspect the appliance immediately and to replace the parts which has been in contact with water.
15. Do not operate the appliance when the glass door was removed, cracked or broken. Replacement of the glass service should be done by a qualified service person.
16. Do not strike the glass door of appliance.
17. Keep the packaging material away from children and dispose of the materials in a safe manner.

18. Always unplug appliance when not in use.

19. Do not operate any heater after it malfunctions. Disconnect power at service panel and have heater inspected by a reputable electrician before reusing.

20. Do not use appliance outdoors.

21. Never place appliance where it may fall into a bathtub or other water container.

22. Do not run cord under carpet. Do not cover cord with throw rugs, furnitures etc. Place cord away from cluttered area and where it will not be tripped over.

23. Connect to properly grounded outlets only.

24. Do not insert or allow foreign objects to enter any ventilation or exhaust valve as this may cause an electric shock or fire, or damage the appliance.

25. To prevent fire cases, do not block the air intake or exhaust valve in any way. Do not use appliance on soft surfaces, such as carpet, where exhaust valve may become blocked.

26. Always plug appliances directly into a wall outlet/receptacle. Do not use extension cord or relocatable power tap (outlet/power strip).

⚠ WARNING

WARNING: Chemical Burn Hazard.
Keep batteries away from children. The following or equivalent: "This product contains dry batteries, If the battery is swallowed or enters the body".
It can cause severe internal burns and can lead to death in as little as 2 hours. Always completely secure the battery compartment. If the battery compartment does not close securely, stop using the product, remove the batteries, and keep it away from children. If you think batteries might have been swallowed or placed inside any part of the body, seek immediate medical attention.
a) The cells shall be disposed of properly, including keeping them away from children;
b) Even used cells may cause injury.

SAVE THESE INSTRUCTIONS

1.0 PACKING LIST

No.	Description	Quantity
1	Front Frame	1 pc
2	Electric Fireplace	1 pc
3	Mounting Bracket (Pre-attached)	1 pc
4	Manual	1 pc
5	Decorative Stuff	Varies
6	Remote Control	1 pc

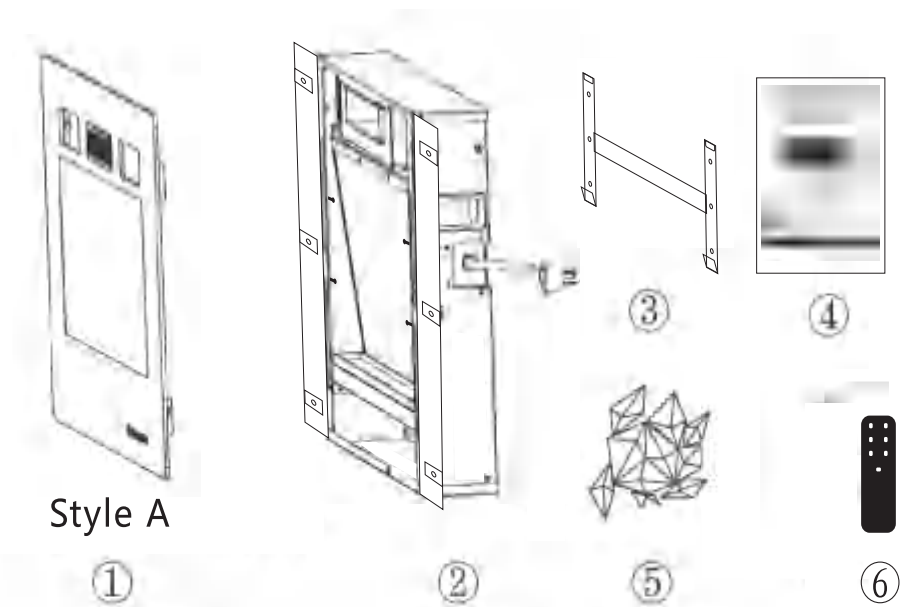

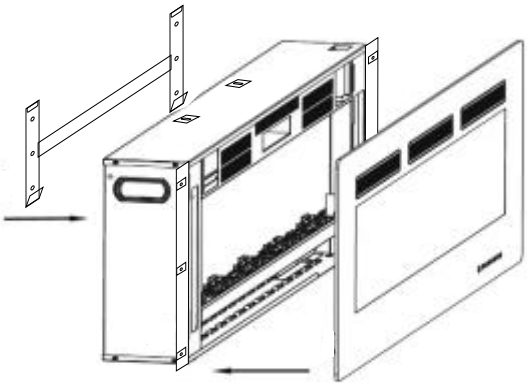

HARDWARE INCLUDED

A

B

C

Part	Description	
A	Anchor Screw	**6**
B	Wall Anchor	**6**
C	M4×12 screw	**2**

1.1 DIMENSIONS

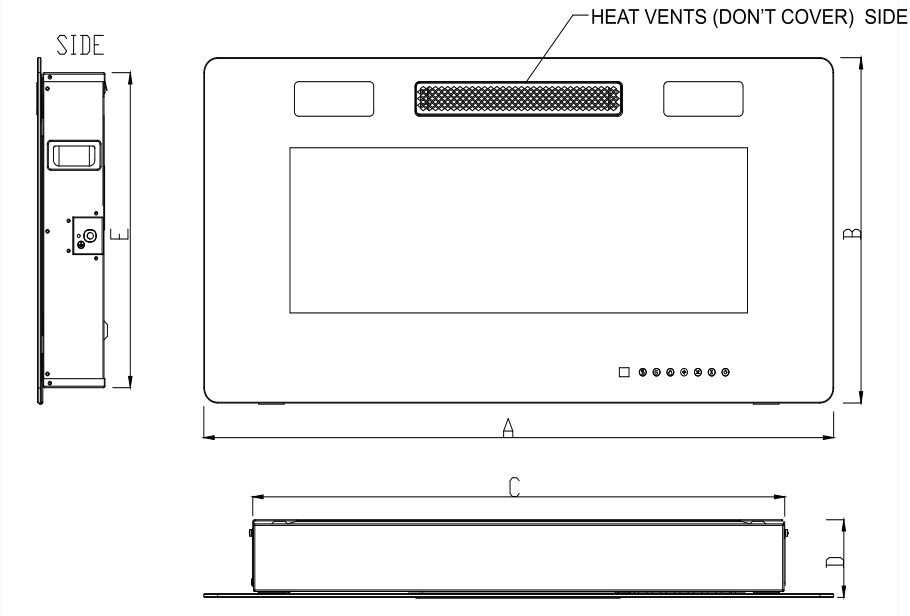

[illegible]	A (mm)	B (mm)	C (mm)	D (mm)	E (mm)	A (in.)	B (in.)	C (in.)	D (in.)	E (in.)
[illegible]	762	460	650	106	420	30	18.11	25.59	4.17	16.54
[illegible]	914	460	702	106	420	36	18.11	27.64	4.17	16.54
[illegible]	1066	460	854	106	420	42	18.11	33.62	4.17	16.54
[illegible]	1270	460	1058	106	420	50	18.11	41.65	4.17	16.54
[illegible]	1524	460	1312	106	420	60	18.11	51.65	4.17	16.54
[illegible]	1829	460	1616	106	420	72	18.11	63.62	4.17	16.54

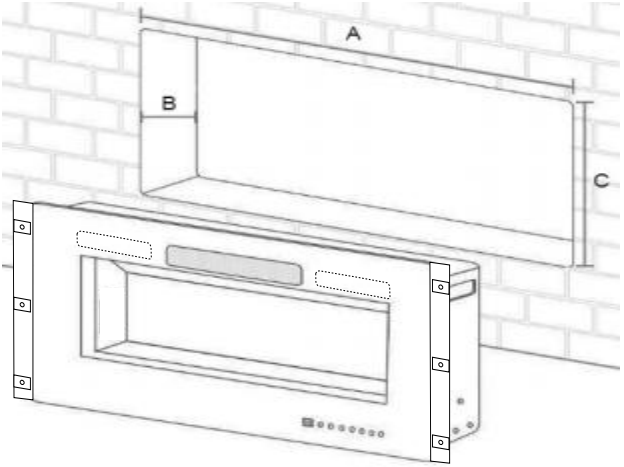

Model	A(mm)	B(mm)	C(mm)	A(in.)	B(in.)	C(in.)
30-LTFP-C1	670-680	91-100	430-450	26.37-26.77	3.58-3.94	16.93-17.7
36-LTFP-C1	717-727	91-100	430-450	28.23-28.62	3.58-3.94	16.93-17.7
42-LTFP-C1	869-879	91-100	430-450	34.21-34.61	3.58-3.94	16.93-17.7
50-LTFP-C1	1073-1083	91-100	430-450	42.24-42.64	3.58-3.94	16.93-17.7
60-LTFP-C1	1327-1337	91-100	430-450	52.24-52.64	3.58-3.94	16.93-17.7
72-LTFP-C1	1636-1646	91-100	430-450	64.41-64.81	3.58-3.94	16.93-17.7

NOTE:

※ **The size of column B left some space for the main power switch on the top, you can also choose 3.54 inch for full embedding, since the touch screen also has a main power switch.**

※ **Please leave enough space to pace the power cord on the right side of the fireplace.**

LISTING APPROVALS

This appliance has qulifired with the ETL Standards for fixed and location-dedicated electric room appliances in the United States and Canada. If you need assistance during installation, please contact your local dealer.

NOTE: This appliance must be electrically wired and grounded in accordance with local or, in the absence of local, with National Electric Code ANSI/NFPA 70-latest edition in the United States or the Canadian Electric Code, ETL in Canada.

Model No.	
Description	Wall-mount, recessed, or free standing Appliance
Voltage	120VAC
Watts	Max 1500W
Amps	12.5AMP
BTUs	5100BTU

2.0 ELECTRICAL INSTALLATION NOTES

2.1 GENERAL INSTRUCTIONS

CAUTION - Some parts of this product can become hot and it easy to cause burns. Pay attention to keep away from them.

A. Please confirm that house circuit breakers for the outlet are on, before plugging your appliance into an electrical outlet.
B. The appliance may emit a slight harmless odor when first used. It is caused by the initial heating of internal appliance elements and will not occur again.
C. If your appliance does not emit heat, check the operation section of this manual for further information.
D. Use with an ETL or UL certified protector.

RISK OF FIRE! THE POWER CORD MUST NOT BE PINCHED AGAINST A SHARP EDGE. SECURE CORD TO AVOID TRIPPING OR SNAGGING TO REDUCE THE RISK OF FIRE, ELECTRIC SHOCK, AND PERSONAL INJURY. DO NOT RUN CORD UNDER CARPETING. DO NOT COVER THE CORD WITH THROW RUGS ETC.

ARRANGE THE CORD AWAY FROM CLUTTERED AREAS AND WHERE IT WILL NOT BE TRIPPED OVER.
RISK OF FIRE! TO PREVENT A POSSIBLE FIRE, DO NOT BLOCK AIR INTAKE OR EXHAUST VALVE IN ANY MANNER. DO NOT USE IT ON SOFT SURFACES WHERE OPENINGS MAY BECOME BLOCKED.
RISK OF FIRE! DO NOT BLOW OR PLACE INSULATION AGAINST THE APPLIANCE.
THIS ELECTRIC APPLIANCE IS TESTED AND LISTED FOR USE ONLY WITH THE APPROVED OPTIONAL ACCESSORIES. USE OTHER ACCESSORIES THAT NOT TESTED FOR THIS ELECTRIC APPLIANCE COULD DISABLE THE WARRANTY AND THE FIRE HAZARD RESULT.

A FIRE RESULT MAY CAUSING PROPERTY DAMAGE, PERSONAL INJURY, OR DEATH IF THE CUSTOMER DID NOT FELLOW THE INSTRUCTION EXACTLY. DO NOT STORE OR USE GASOLINE OR OTHER FLAMMABLE VAPORS IN THE VICINITY OF THIS APPLIANCE.
THIS APPLIANCE IS HEAVY. THUS THERE NEED TWO PEOPLE FOR INSTALLING.
IN ANY WAY, HEATER VENTS ON THE ELECTRIC APPLIANCE CAN NOT BE COVERED. AS IT MAY LEADE A FIRE HAZARD.
THE FIRE HAZARD RESULT.

Follow all national and local electrical codes.

1. The heater should be installed only using the mounting brackets we provided.
2. The heater can not be recessed in the ceiling. There must be enough space around the top of the heater to ensure adequate ventilation.
3. The heater should be placed at least 60cm away from surrounding walls.
4. At least 90 cm should always be left in front of the heaters to ensure safety.
5. The Heater can not be located either directly below, or in front of a socket outlet.
6. The heater must be installed to prevent any control switches from being able to be touched by anyone who is in the shower or bath.
7. Make sure that there is no possibility of inflammable material, combustible material, or curtains coming into contact with the heater.
8. **DO NOT USE THE HEATER WITHOUT SUPERVATION.**

3.0 INSTALLATION INSTRUCTIONS

3.1 UNPACKING AND TESTING APPLIANCE WALL

Carefully remove the appliance from the box. Before installing the appliance, make sure the appliance operates properly by plugging the power supply cord into a conveniently located 120 Volt grounded outlet.

3.2 GROUNDING APPLIANCE

This appliance is for use on 120 Volts. The cord has a plug as shown in (A). An adapter as shown in (C) is available for connecting three-blade grounding-type plugs to two-slot receptacles. The green grounding lug extending from the adapter must be connected to a permanent ground such as a properly grounded outlet box. The adapter should not be used if a three-slot grounded receptacle is available.
To disconnect the appliance, turn the controls off, then remove the plug from the outlet.

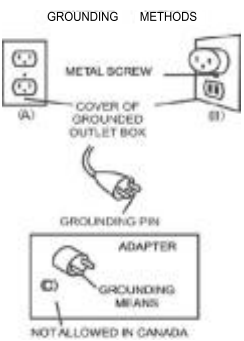

3.3 ASSEMBLY

The fireplace can be installed with 2 options:

1. Wall hanging with provided mounting bracket.:

2. Built-in construction (in-wall recessed).:

1. Install carbon bed decorative material

If a complete fireplace is installed on the wall, place the decorative material (crystal stones or imitation carbon) on transparent strip of the fireplace carbon bed.

Installation of the crystal stones

a. Take the crystal stones out of the PE packaging bag inside the packaging box, and carefully place the crystal stones on top of the transparent slot, placing them evenly from one end to the other. (as shown on the right)

Installation Option 1 - Wall Hanging

The fireplace can be installed with 2 options:

- Remove the fixed screw in the side plate
- Lift the glass frame 1-2 cm vertically. Then the entire glass frame can be removed from the front.
- Take the glass frame 10-20 cm away from the appliance, pull out the data cable connector with the help of others or put the glass panel down on the ground before complete separation.

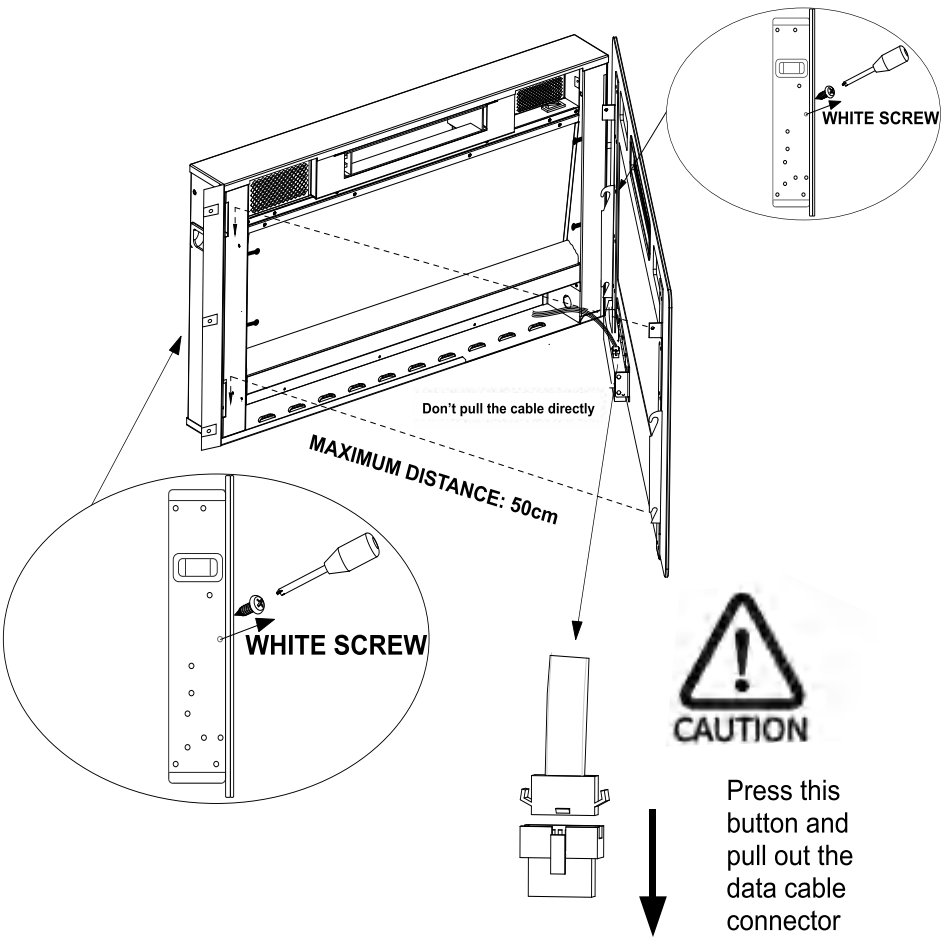

The fireplace can be installed with 2 options:

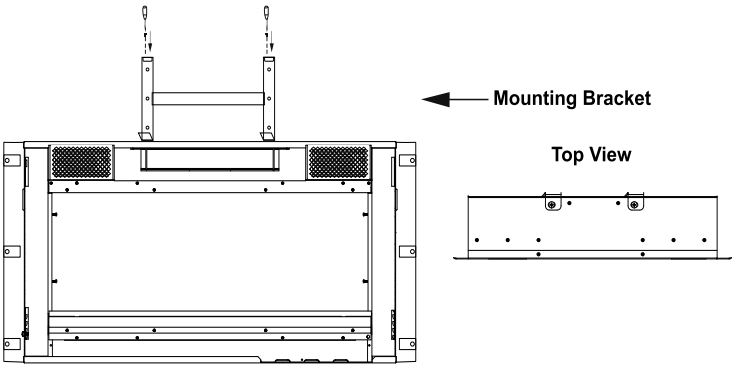

- Unscrew the two screws with a Phillips screwdriver from both ends (Do not discard them), then remove the per-attached mounting bracket.

Step 3. Choosing a Wall Location

- Find a safe location, where minimum clearance from the ceiling and the mantel must be at least 8 inches (200 mm); minimum clearance from the front must be at least 3 feet (900 mm). Choose a location near an outlet so an extension cord is not required.

Note: DO NOT position the unit directly below a power outlet. Please check Safety Information on pages 2 and 3 for more warnings about placement, installation, and use of this product.

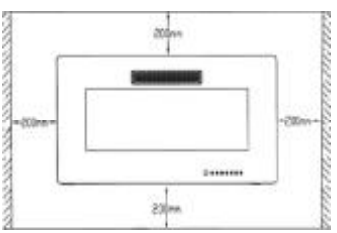

Step 4. Drilling the Holes and installing the Mounting Bracket

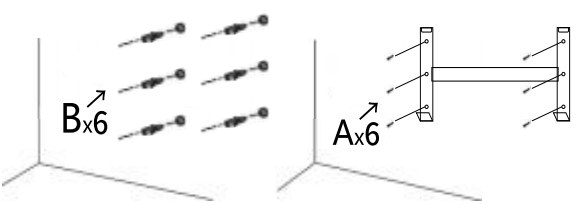

- Use a level to align the bracket and mark the holes which need to be drilled with a pencil.
- Drill 3-10 (according to the model you have bought) 8/25 in. (8mm) holes in the wall.
- Insert the wall anchors into the holes by using a hammer.
- Attach the mounting bracket to the wall by fastening the Anchor Screws (Part B) into the wall anchors (Part A).

Step 5. Hanging the Fireplace on the Bracket

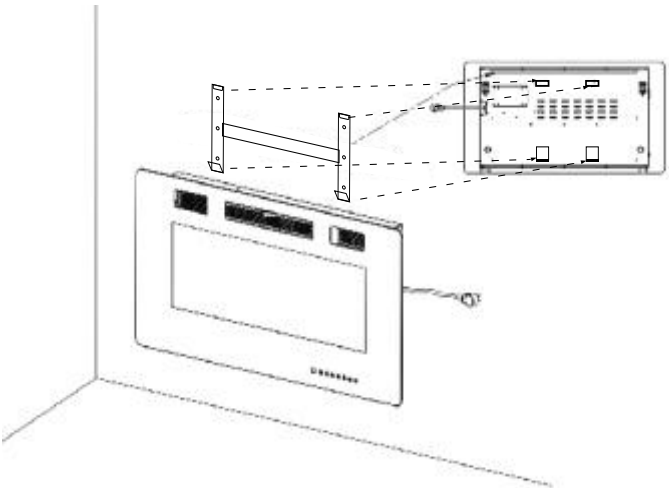

- Hang the slotting behind the appliance on the hooks at the left and right sides of the bracket.

(Please hold the appliance to avoid dropping down before the installation is finished)

Step 6. Locking the Fireplace on the Bracket

use the screw we removed from step 2.

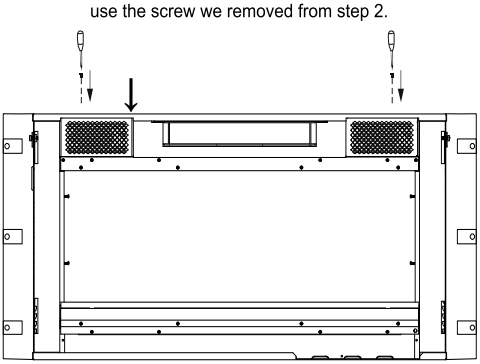

Top View

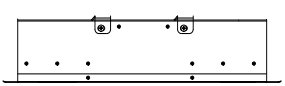

- Lock the bracket at both ends with the screw we removed from step 2 to ensure a solid combination of the

Step 7.

- Connect the data cable connector before hanging the glass frame on the appliance.
- Gently push on the glass panel by aligning the 4 hooks until it snaps into position (sinks down 1-2 cm).

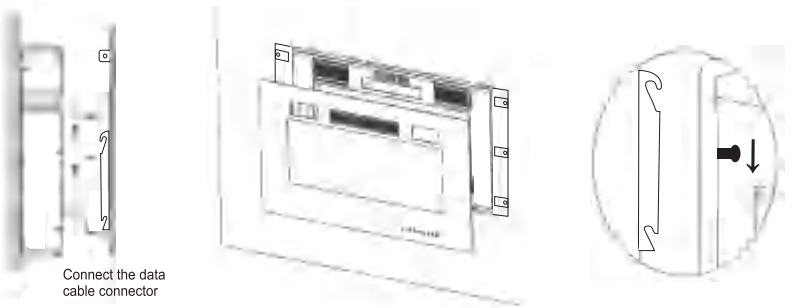

Step 8. Refasten the Glass Frame

- Thread the M4 X 12 screw into the threaded holes on the glass panel. Check the alignment of the glass panel and securely tighten the screws.

Installation - Built in Construction

Step 1. Removing the Glass Frame

Step 2. Removing the Mounting Bracket

(Step 1 and Step 2 please refer to page 13-14 same as Wall Hanging Installation.)

Step 3. Settling the Holes of Screw

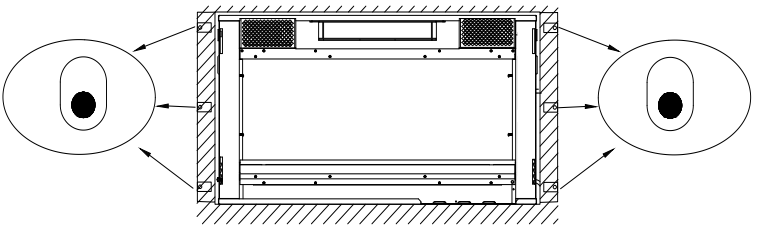

- The appropriate cavity (1-2 cm bigger for each side) needs to be prepared according to the size of the appliance.
- Put the fireplace in place, mark the holes which need to be drilled with a pencil. Then take it out of the cavity again.

Step 4. Drilling & Installing the Wall Anchors

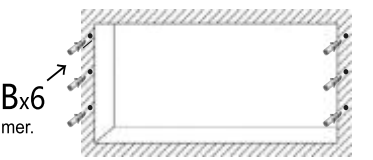

- Drill the holes 7/25 in. (7 mm) on the prepared marks.
- Insert the wall anchors (Part B) into the holes by using a hammer.

Step 5. Placing the Pads and Fixing the Fireplace

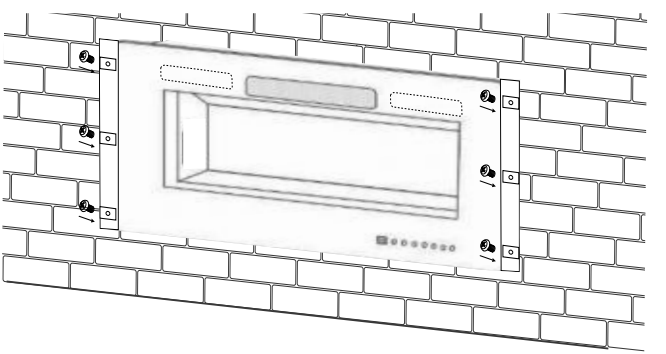

- Screws (Part A) pass through the holes from the front of fireplace with screwdriver.

(Note: Install carefully and don't let the screws fall into the fireplace.)

- Put the Fireplace into the prepared cavity.
- Fasten the fireplace firmly into the wall by the screws for each side.

Step 6. Hanging the Glass Frame

- Connect the data cable connector before hanging the glass frame on the appliance.
- Gently push on the glass panel by aligning the 4 hooks until it snaps into position (sinks down 1-2 cm).

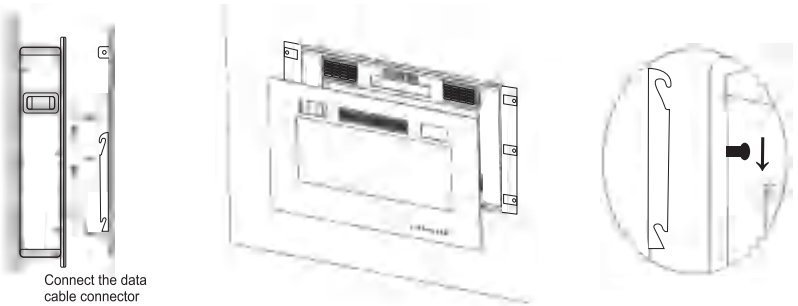

WARNING: It's better to reserve a space between frame and wall to enable better air circulation during working if available.

Step 7. Refasten the Glass Frame

- Thread the M4 X 12 screw into the threaded holes on the glass panel. Check the alignment of the glass panel and securely tighten the screws.

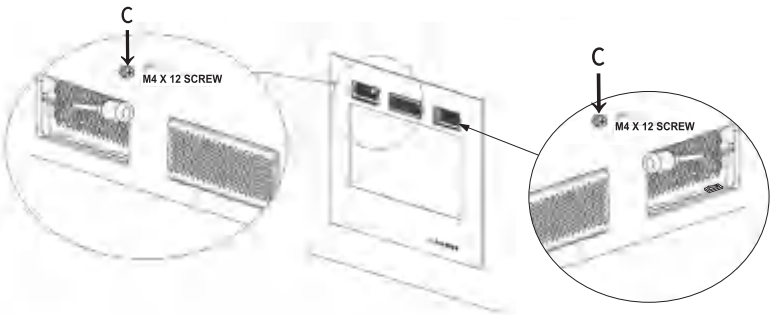

4.0 FINISHING

GRILLE MAY BE HOT, DO NOT TOUCH AIR OUTLET UNTIL COOLED.
THE DOOR HOOKS ARE PART OF A SAFETY SYSTEM AND MUST BE PROPERLY ENGAGED. DO NOT OPERATE THE APPLIANCE WITH HOOKS DISENGAGED.

FACING FINISHING MATERIALS MUST NOT INTERFERE WITH AIR FLOW THROUGH AIR OPENINGS, OPERATION OF DOORS OR ACCESS FOR SERVICE. OBSERVE ALL CLEARANCES WHEN APPLYING COMBUSTIBLE MATERIALS.

BEFORE DOOR IS REMOVED. TURN THE APPLIANCE OFF AND WAIT UNTIL APPLIANCE IS COOL. DOORS ARE HEAVY AND FRAGILE, SO HANDLE WITH CARE.

NOTE: Glass front must be removed and the appliance must be finished in its final location before the media bed kits are installed. Media bed kits may have sharp edges, wear safety glasses and gloves when handling.

5.0 OPERATING INSTRUCTION

Once the appliance has been plugged into a grounded electrical outlet, it is ready to operate.

5.1 MAIN POWER BUTTON

The main power switch for the fireplace is on the front right.
Press indicator to turn on the appliance, press the other side turns it off.

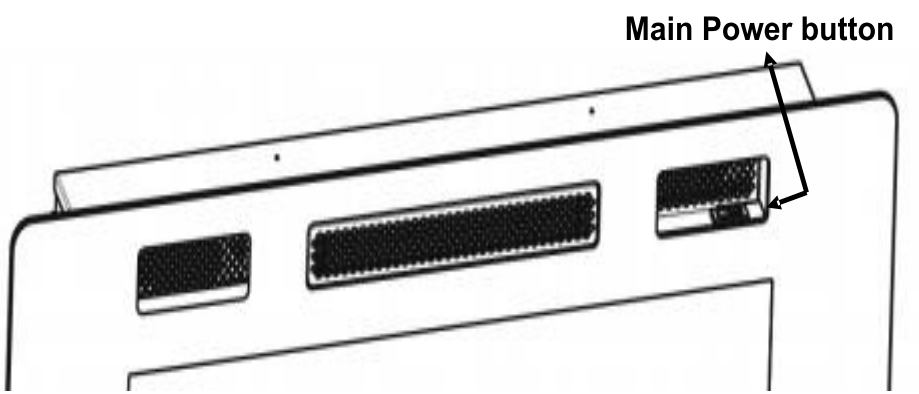

Note: Make sure the Main Power Switch is turned on before operating.

5.2 CONTROL PANEL / REMOTE CONTROL OPERATION

(Main Power Switch must be turned ON before using remote control.)

The touch display panel is shown on the bottom right of the front of the appliance.

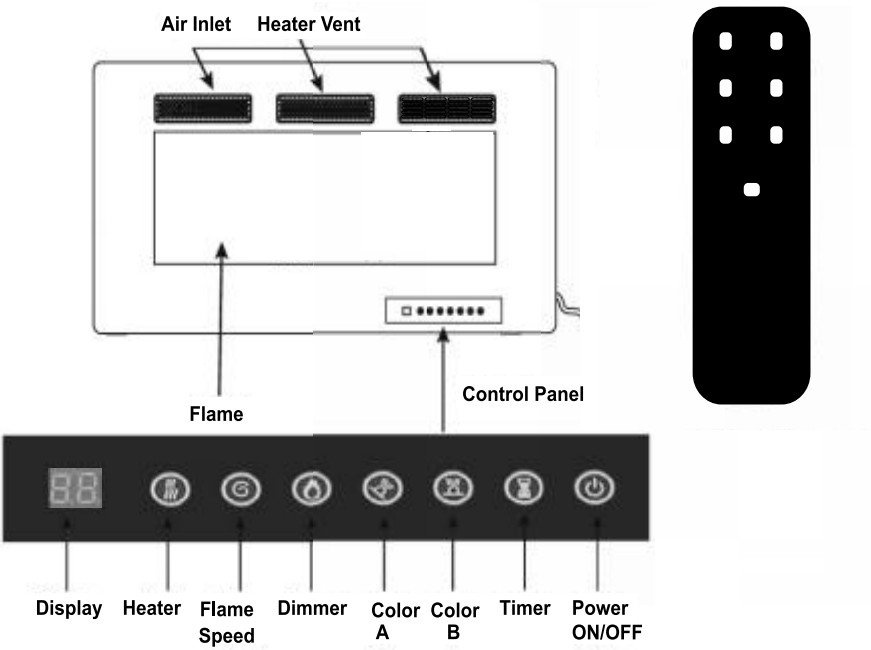

POWER		Turn the appliance ON/OFF. **NOTE**: Make sure the main switch on the top of fireplace is turned on before operating.
DIMMER		Control Flame brightness. 5 Settings: (L1-L2-L3-L4-L5) Flame dims from L1 to L5. L5 is the brightest setting.
TIMER		Control the Timer. 8 Settings: (1h, 2h, 3h, 4h, 5h, 6h, 7h, 8h) Press button until reach desired setting.
FLAME SPPED		Control Flame speed. 5 Settings: (V1-V2-V3-V4-V5) Flame speed from V1 to V5. V5 is the largest setting

HEATER		Control the Heater. Press button to initiate the heater. (OFF) no heater or blower. (-), heater blows warm air(750 W) (--), heater blows hot air(1500 W) **NOTE**: Heater functions cycle from (OFF) (-)(–)
COLOR B		Control the flame color. 12 Settings: 1.red 2.yellow 3.blue 4.orange 5.red & yellow 6.red & blue 7.orange & blue 8.yellow & blue 9.yellow & blue & red 10.blue &orange & red 11.red & yellow &blue 12. multi color **NOTE**: When you press the button for 6 seconds until you hear a beep, the indicator will show digital "0" , the flame color and brightness will be changed automatically.
COLOR A		Control the decorative lamp color. 12 Settings: 1.red 2. light blue 3.green 4.rose red 5.yellow 6.blue 7.purple 8.white 9.saffron 10.sky blue 11.grass green 12.cyan **NOTE**: When you press the button for 6 seconds until you hear a beep, the indicator will show digital "0" , the flame color and brightness will be changed automatically.

WARNING: Do not move or remove the mesh trim panel when the appliance is plugged in and operating. This will cause the remote control and touch panel to no longer function.

NOTICE: When the heater is first turned on, a slight odor may be present. This is normal and should not occur again unless the heater is not used for a long period of time.

NOTICE: To improve operation, aim the remote control at the front of the fireplace. DO NOT press the buttons too quickly. Give the unit time to respond to each command.

5.3 REMOTE CONTROLN

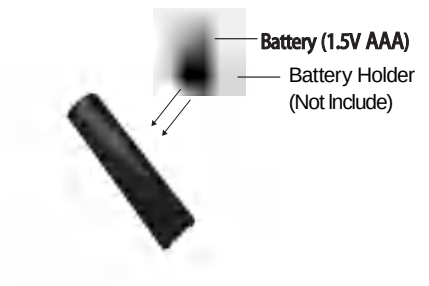

Battery must be recycled or disposed of properly. Check with your Local Authority or Retailer for recycling advice in your area.

6.0 TROUBLE SHOOTING GUIDE

PROBLEM	SOLUTION	
The mounting bracket cannot be removed	1. The mounting bracket is pre-attached. Unscrew the two screws at both sides of the fireplace by Phillips screw driver, then remove the pre-attached mounting bracket. 2. If the problem is still not solved, please contact us via **Amazon Message** or message.	
The control panel functions do not work	1. Make sure the Power Switch on the control panel is turned on before operation. 2. Make sure you have reconnected the data cable which was pull out when you removed the glass frame. 3. If the problem is still not solved, please contact us via **Amazon Message**.	
Sudden power outage during the heating process	1. **Don't cover the air outlet.** 2. Unplug the plug, wait for 10 minutes and try to open it again. 3. If the problem is still not solved, please contact us via **Amazon Message**.	
The appliance does not blow hot air when it turns on and off.	This is normal. The fans blow cool air while the appliance gradually heat up. The fans blow after the appliance turn off to cool the appliance and prevent overheating.	
The appliance does not blow hot air when it turns on and off.	1. Main Power supply switch is off.	Turn the main power supply switch to "ON" position.
	2. Circuit breaker has tripped. air when it turns on and off.	Too many appliances on this circuit. Be sure that electrical supply for this unit is an individual circuit.
	3. Heater is unplugged from wall outlet.	Make sure the power cord is plugged into a function-ing and properly grounded 15 Amp 120V AC electrical outlet.
	4. Power cord or power plug are damaged.	Contact a qualified electrician to replace power cord.
	5. Power outlet for power plug prong is loose.	Check the power outlet and replace with a new one.
	6. Loose wiring.	Check all wiring for loose connections. Contact a qualified electrician.
Heater is on, but no flame or low flame intensity.	1. Heater switches in on, but Flame is not on.	Long-press the "DIMMER" button for 6 seconds, the appliance will go into sleep mode. All the lights off, the heating function goes on. Long-press for 6 seconds again, the appliance will back to normal mode.

	2. Flame Adjusting knob is at low setting.	Turn the knob to maximum setting.
	3. Loose wiring.	Check all wiring for loose connections. Contact a qualified electrician.
Flame are frozen	1. Flame element is not attached to the motor.	Contact us via **Amazon Message**
	2. Rotation motor is defective.	Contact us via **Amazon Message**
Excessive noise in the lower portion of the heater.	1. Flame element isn't seated properly.	Contact us via **Amazon Message**
	2. Motor is defective.	Contact us via **Amazon Message**
Heater system doesn't come on.	1. Heater power switch is off.	Turn the heater power switch to the "ON" position.
	2. Heater system is overheated.	Maybe the heater is covered or air inlet or air outlet is blocked; remove the clothes or the blockage and turn off the power switch and unplug it. Wait 10 minutes, and then turn the heater on again.
	3. Loose wiring.	Check all wiring for loose connections. Contact a qualified electrician.
	4. The air inlet or air outlet is blocked completely.	Leave adequate space around the unit. Remove the blockage, on or in front of the air outlet.
"HEAT " switch has been flipped in the on position, but there is no airflow.	1. The heater system is overheat-ed. Temperature Limit thermostat is cut off.	Check the air inlet and outlet. Turn off the power switch and unplug it. Wait 10 minutes, and then tun the heater on again.
	2. Fan motor is defective.	Contact us via **Amazon Message**
	3. Fan blower is balanced badly.	Contact us via **Amazon Message**
	4. The "POWER" and the "HEAT" switches are not turned on.	Turn these two switches on.
Fan runs but no heat is coming out.	1. Loose wiring.	Contact us via **Amazon Message**
	2. Bad heating element.	Contact us via **Amazon Message**
	3. Build up of dirt on the fans.	Clean all fans.
	4. Heater fan is defective.	Contact us via **Amazon Message**

The remote control does not work.	1. The battery is not properly installed.	Make sure the battery is properly installed. Move the battery's transparent insulating piece away before using.
	2. Not pointing to the right position.	Aim the remote control at the receiver.
	3. Have an obstacle in front of the machine.	Remove objects that may be in the way. Items between the remote control and the remote control receiver will block the signal.
	4. Press the remote control buttons too quickly.	Don't press the remote control buttons too quickly. Give the unit time to respond to your commands.
There is an odor coming from the heater.	The heater may emit a slight,harmless odor when first used. This is a normal condition caused by initial heating of the internal parts and will not occur again.	

NOTE: For the most of functional problems, you can unplug the plug, wait for 10 minutes and plug it again, the machine will reset to the initial status (product originals).
If the problem is still not solved, feel free to contact us via Amazon Message.

7.0 MAINTENANCE

DISCONNECT POWER AND ALLOW HEATER TO COOL BEFORE ATTEMPTING ANY MAINTENANCE OR CLEANING TO REDUCE THE RISK OF FIRE, ELECTRIC SHOCK OR DAMAGE TO PERSON.
THE FIREPLACE SHOULD NOT BE OPERATED WITH AN ACCUMULATION OF DUST OR DIRT ON OR IN THE UNIT, AS THIS CAN CAUSE A BUILD UP OF HEAT AND SUBSEQUENT EVENTUAL DAMAGE. FOR THIS REASON THE HEATER MUST BE INSPECTED REGULARLY, DEPENDING ON CONDITIONS AND AT LEAST AT YEARLY INTERVALS.

7.1 PARTIALLY REFLECTIVE GLASS CLEANING

The partially reflective glass is cleaned in the factory during the assembly operation. During shipment, installation, handling, etc., the partially reflective glass may collect dust particles; these can be removed by dusting lightly with a clean dry cloth.
To remove fingerprints or other marks, the partially reflective glass can be cleaned with a damp cloth. They partially reflective glass should be completely dried with a lint-free cloth to prevent water spots. To prevent scratching, do not use abrasive cleaners.

7.2 SCHEMATIC DIAGRAM

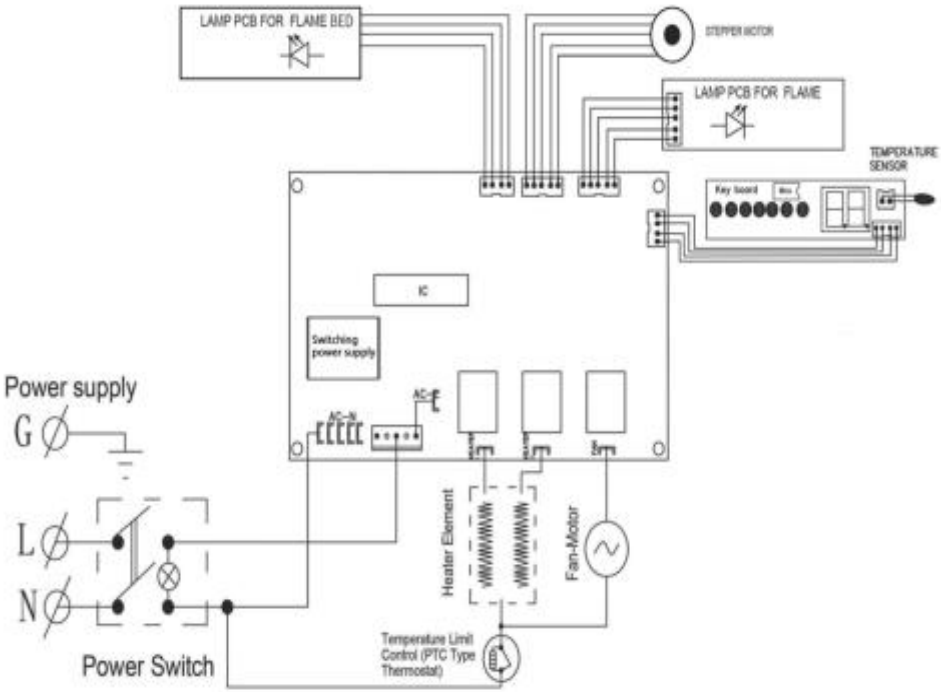

8.0 LIMITED WARRANTY

This warrants to the original purchaser that this product is free from defects in material and workmanship as of the date of purchase and that it will, under normal use and proper care, remain so for one year from the date of purchase. Missing or initially defective parts will be replaced free of charge during the period of this limited warranty.

If parts are unavailable, comparable replacement of refund will be given. **The original dated sales receipt is required for all warranty claims.** This warranty does not cover damage which has occurred during transport from the point of purchase to the consumer's home. This warranty does not cover glass, light bulbs, batteries, transportation, labor, or other issues not associated with the manufacture of the product.

This product is for residential use only. Any and all commercial use of this product voids all warranties, and frees the manufacturer from all liability.

Read and understand all assembly and operating instructions, and all safety information and warnings, before use.
The following will void this warranty: Damage caused from tampering with, modifying, or altering the fireplace insert in any manner; Damage due to incorrect assembly, improper care, misuse, or abuse; Damage from being used with the wrong power source; Water damage; Damage caused from this insert being used outdoors; Damage caused from this insert being used for excessive periods of time; Damage caused by the insert being used in a commercial application; Damage from use as a primary heat source; Other misuse or abuse not specifically listed herein.

This product is not intended to be used as a primary heat source. It is for supplemental heating purposes only.

9.0 Q&A AND CONTACT INFORMATION

1.
Q: After installation, I found that half screen of my fireplace was no light. What should I do?
A: This problem was caused by the lamp strip of the product, which installed in the back inner place of the fireplace. Please check the plug of the lamp strip was fully inserted or not. If the problem couldn't be solved with above step, please contact customer service for help.

2.
Q: I turn on the fireplace and the flame is weak what should I do?
A: This problem is caused by the reflective strip (installed in the back inner place of fireplace). Please contact us to replace the reflective strip to solve this problem.

3.
Q: My fireplace makes a lot of noise, could you please tell me why?
A: Firstly, please confirm where the noise come from? There are usually 3 causes of noise.
(1) Motor noise. It is coming from the bottom of the fireplace and could be solved by changing motor, please contact with customer service for change .

(2) Reflected strip noise. It is coming from the back of the fireplace. Please take the fireplace apart, find the reflective strip, and cut off the excess.

(3) Fan noise. It is coming from top of the fireplace. Please contacu customer service. They will send you a repair video and provide you with a repair plan as help to repair the fireplace.

If the problem couldn't be solved by above steps, please contact with customer service for help.

4.

Q: My fireplace does not heat up after plug in, what should I do?

A: It may be the control board is damaged, please send the video and your order number to the email, we will help you solve the problem.

5.

Q: The remote control is insensitive, what should I do?

A: Please confirm you already take out the insulating parts in the remote and load the battery correctly. Then please aim at the lower right corner of the screen to test when using. If the remote still insensitive after above steps, please contact customer service.

CONTACT US !

Do Not Return

Our dedicated team is here to help-just reach out!

1 aftersale@sannwsginc.com

2 Send Message

3 302241503/6605538327

If you have any questions, please leave the **Order ID** and related **picture information**,

we will reply you within **24** hours, and solve the problem,**ASAP !**