ASSEMBLY INSTRUCTION

End Table

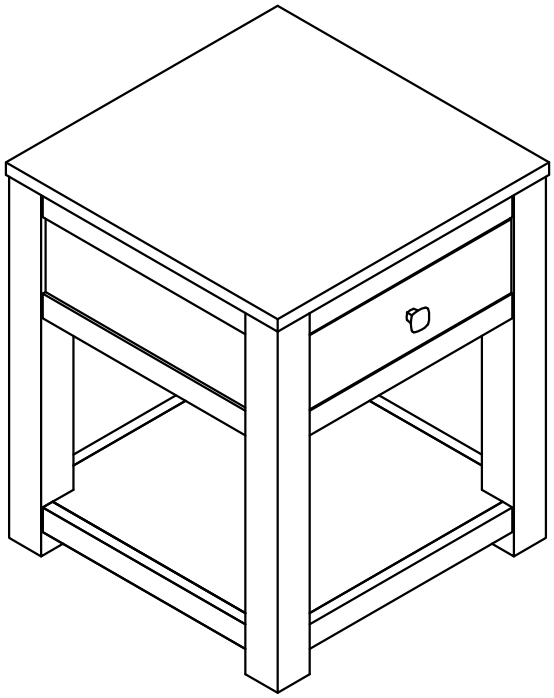

REPLACEMENT PARTS

Please do not contact the company purchased from as we can help you faster.

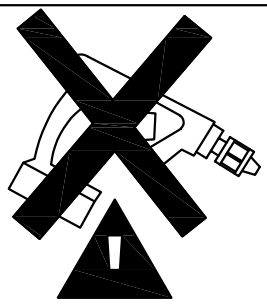

. Use of power tool to assemble this product will invalidate any claim and damage this product making it unsafe !!!
. Please assemble on a clean soft surface to avoid damage.

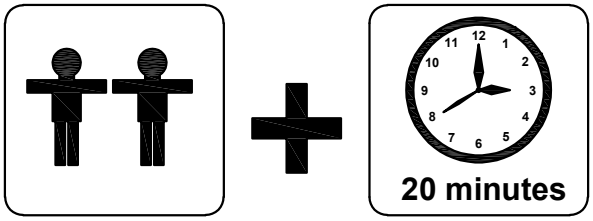

Tools Required

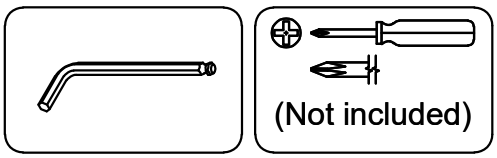

Part list - End Table

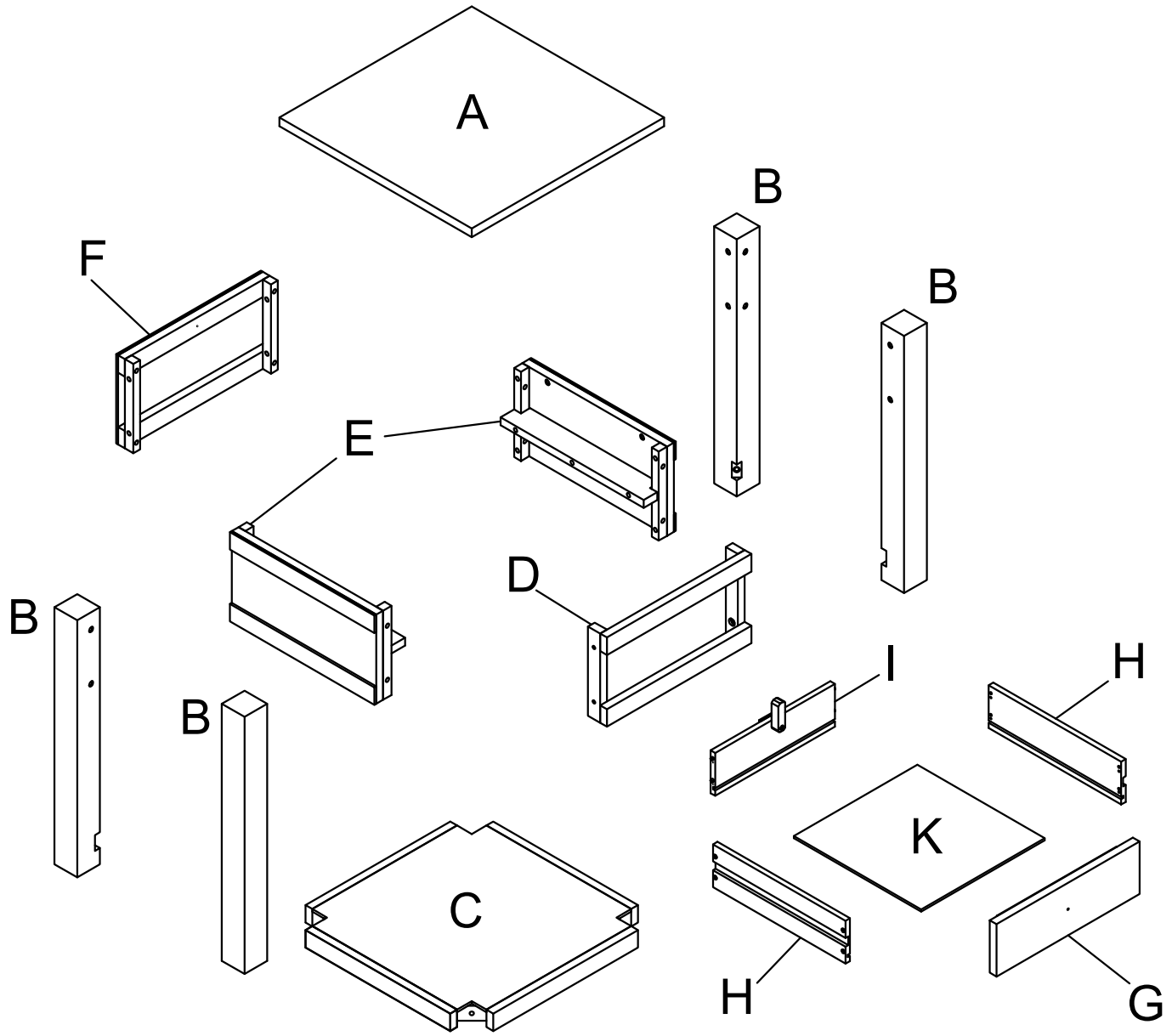

Identifying the hardware-*Identify the hardware using the illustrations below*

1 M6 x 35mm 24	2 Ø19 Washer 24	3 Ø4 x 25mm 08
4 Ø4 x 15mm 04	5 Metal Bracket 02	6 M4 x 35mm 01
7 Knob 01	8 01	

STEP 1

①	②	⑧
M6 x 35mm 04	Ø19 Washer 04	01

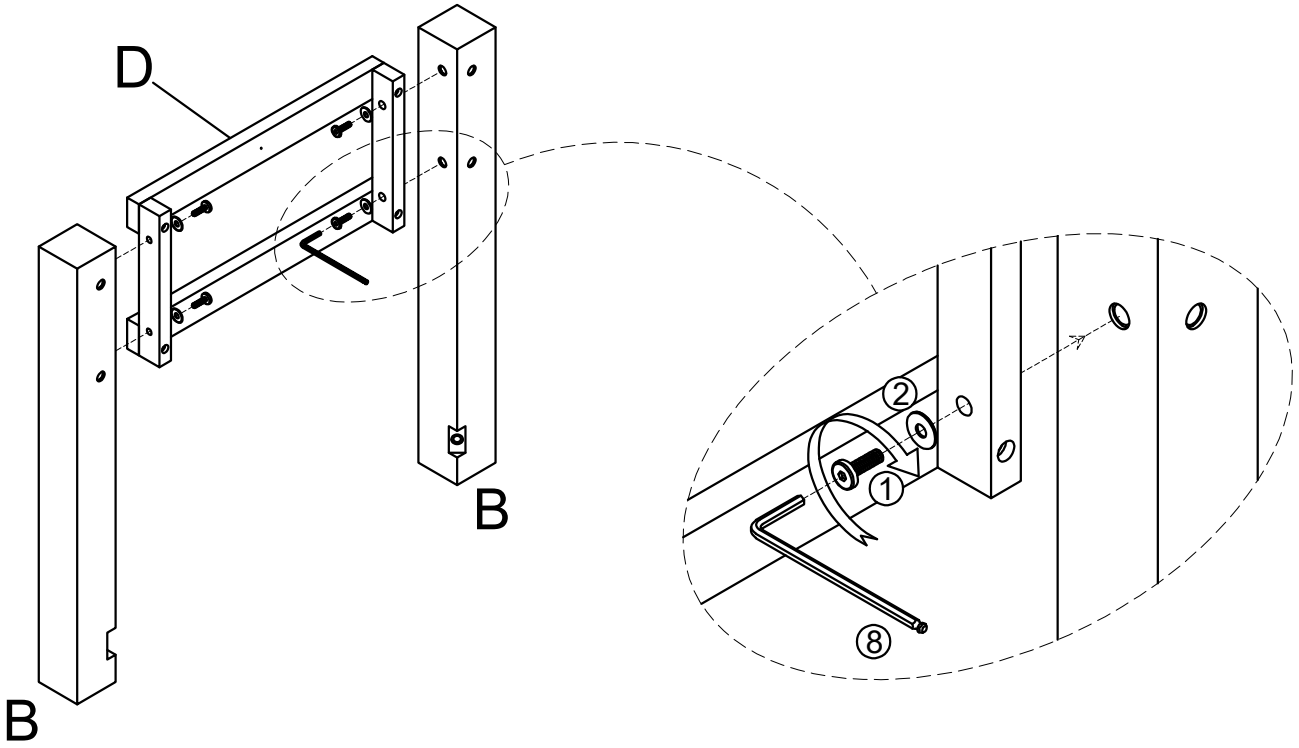

STEP 2

①	②	⑧
M6 x 35mm 04	Ø19 Washer 04	01

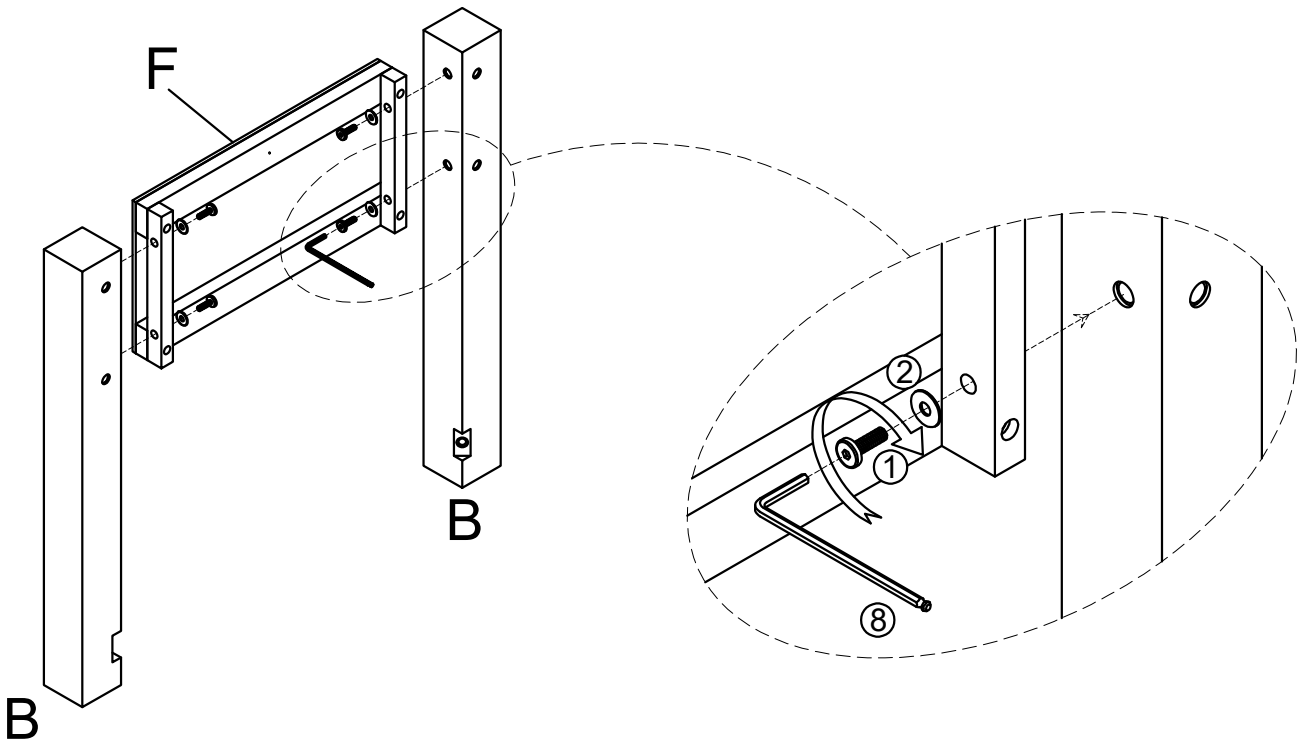

STEP 3

①	②	⑧
M6 x 35mm 04	Ø19 Washer 04	01

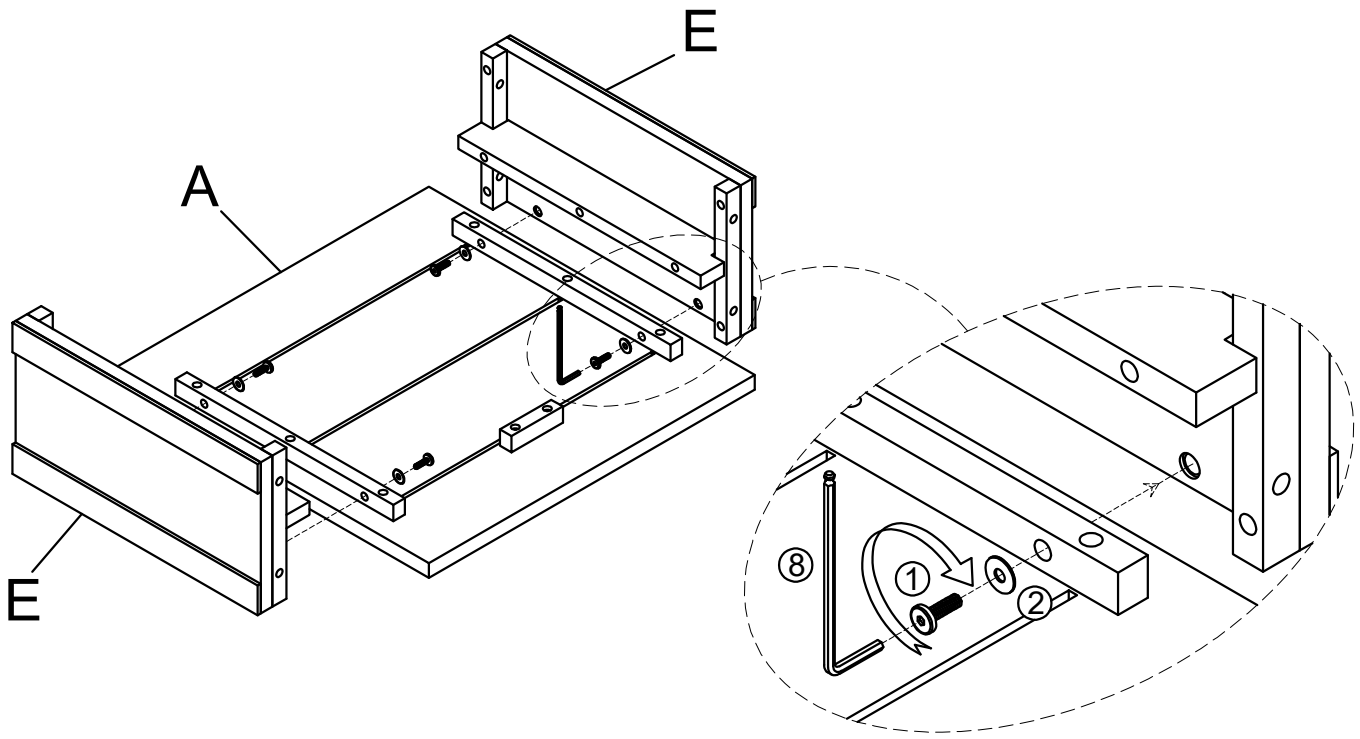

STEP 4

①	②	⑧
M6 x 35mm 04	Ø19 Washer 04	01

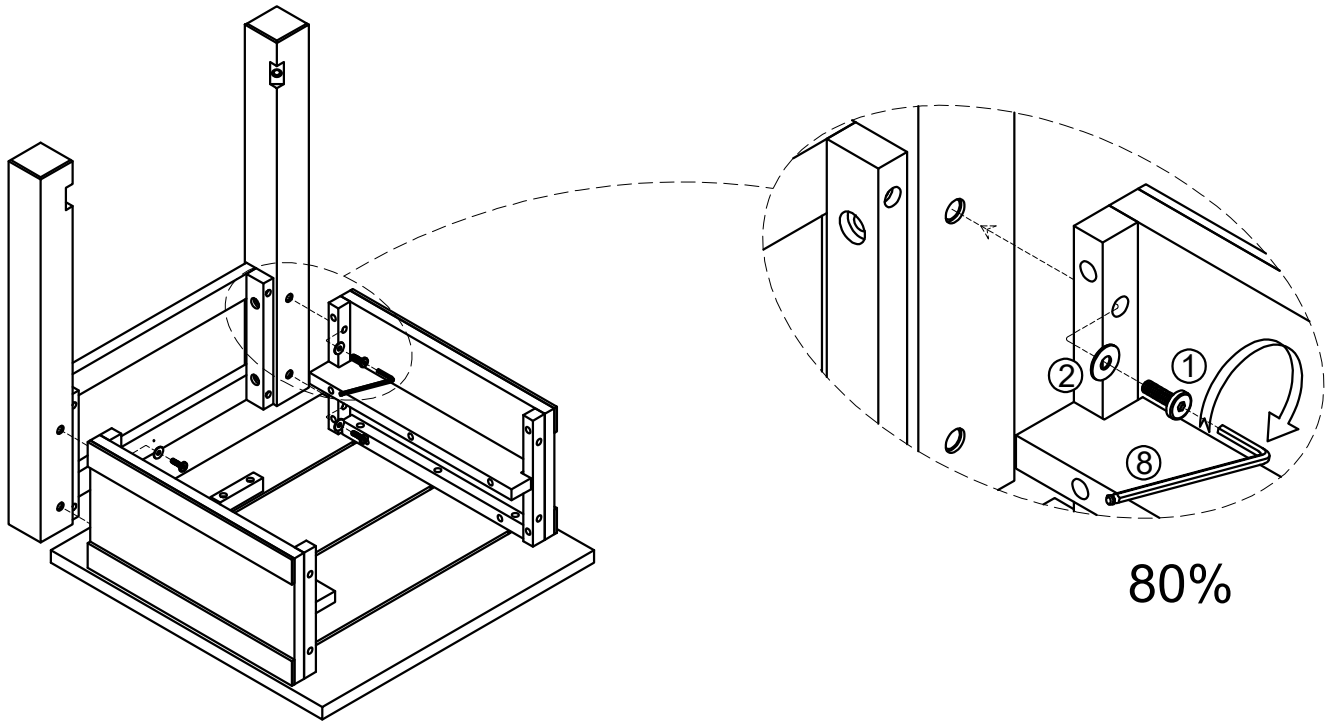

80%

STEP 5

①	②	⑧
M6 x 35mm 04	Ø19 Washer 04	01

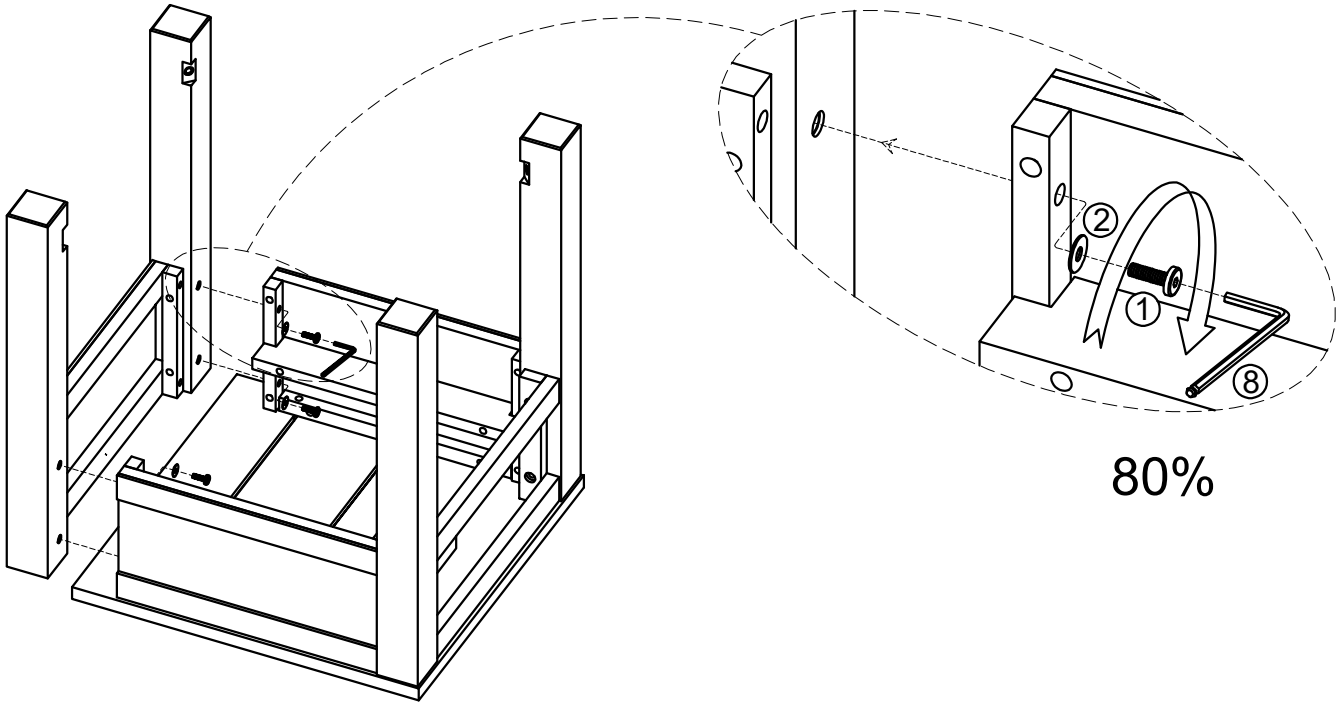

STEP 6

①	②	⑧
M6 x 35mm 04	Ø19 Washer 04	01

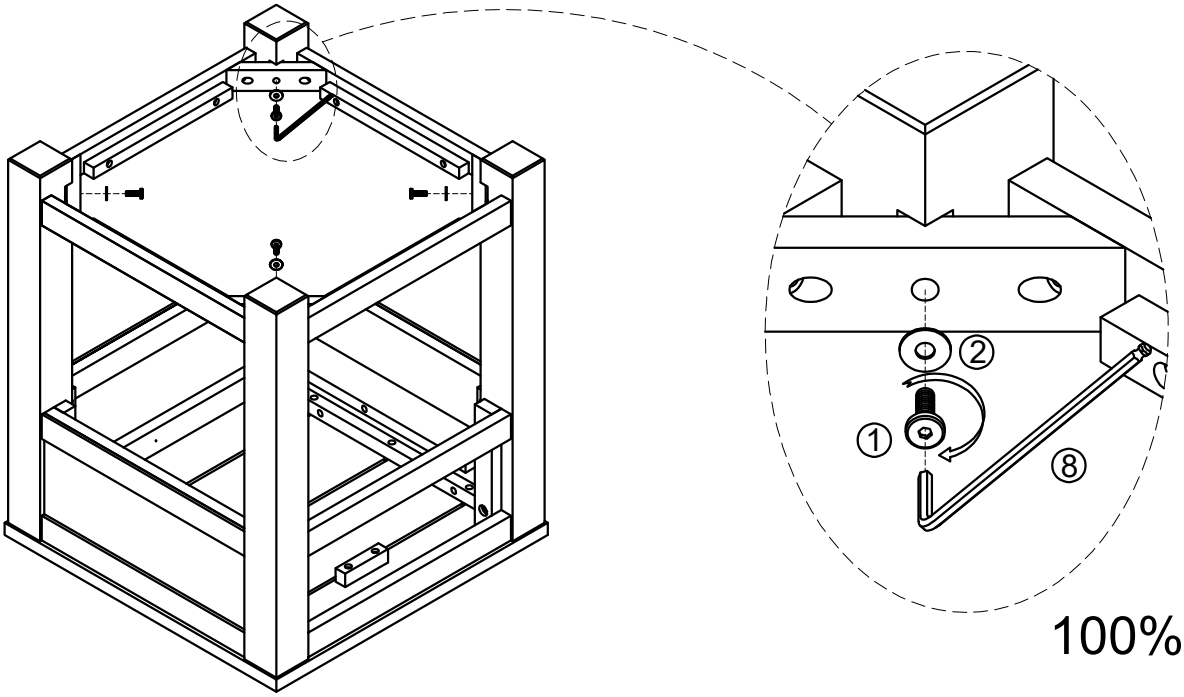

STEP 7

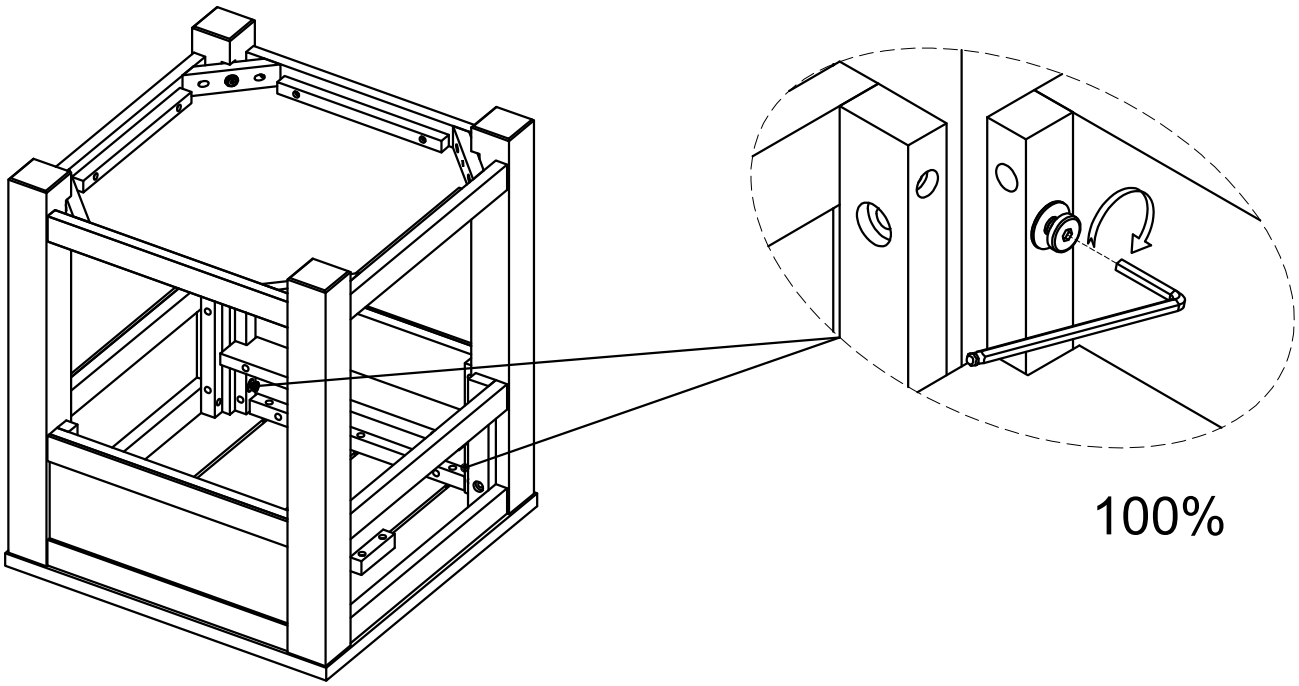

STEP 8

④	Ø4 x 15mm	04
⑤	Metal Bracket	02

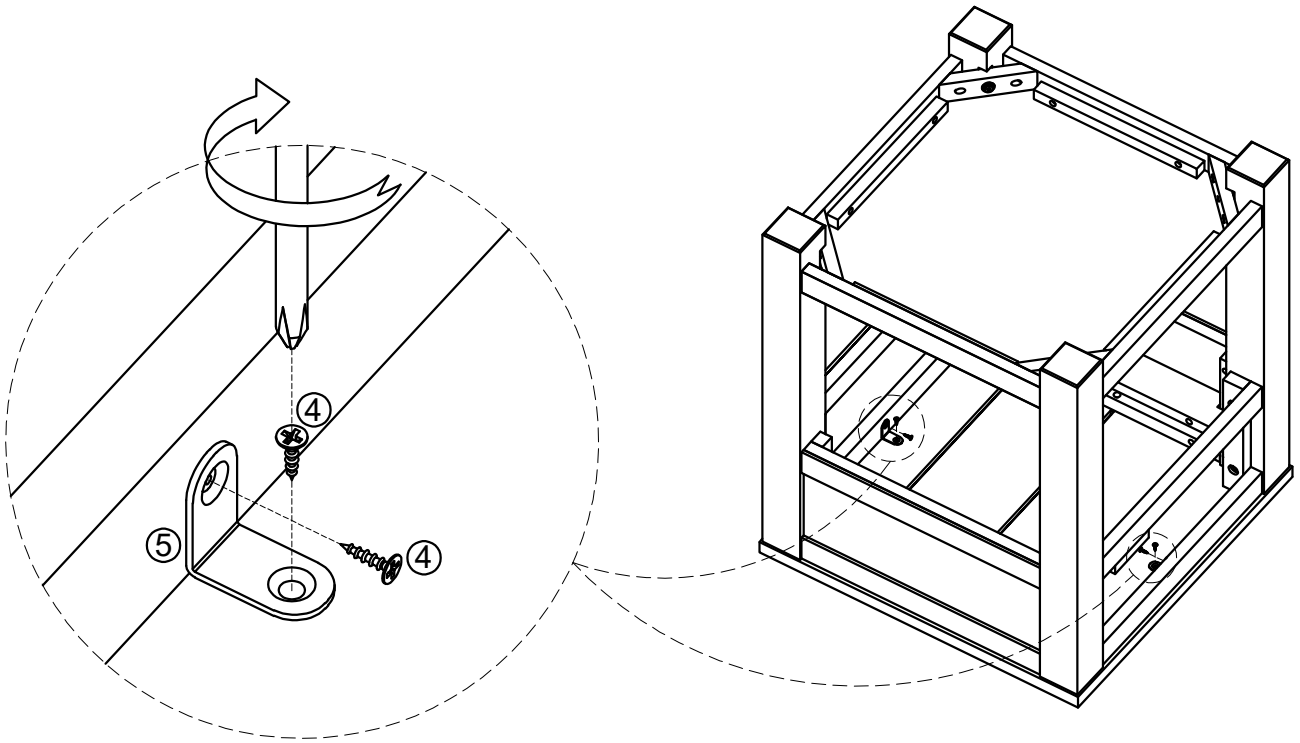

STEP 9

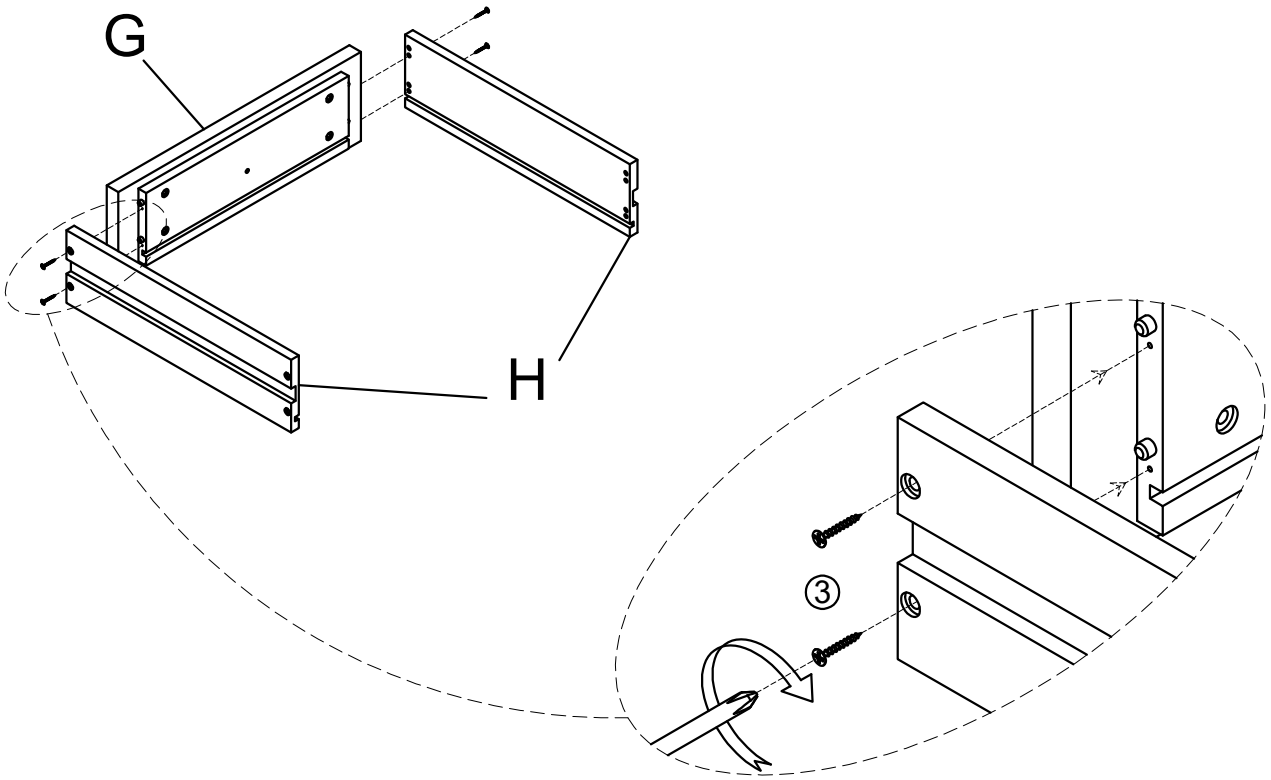

STEP 10

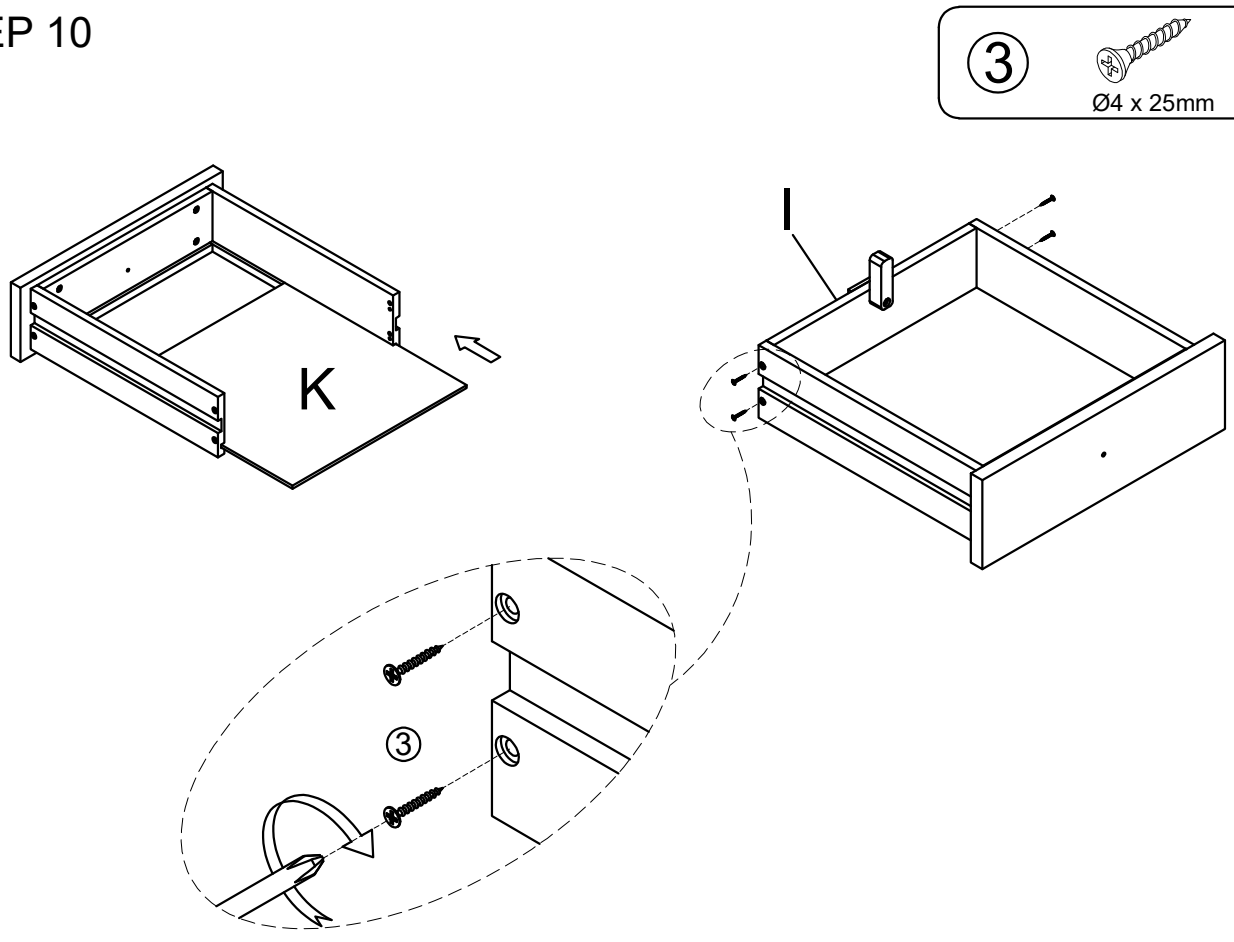

STEP 11

⑥	M4 x 35mm	01
⑦	Knob	01

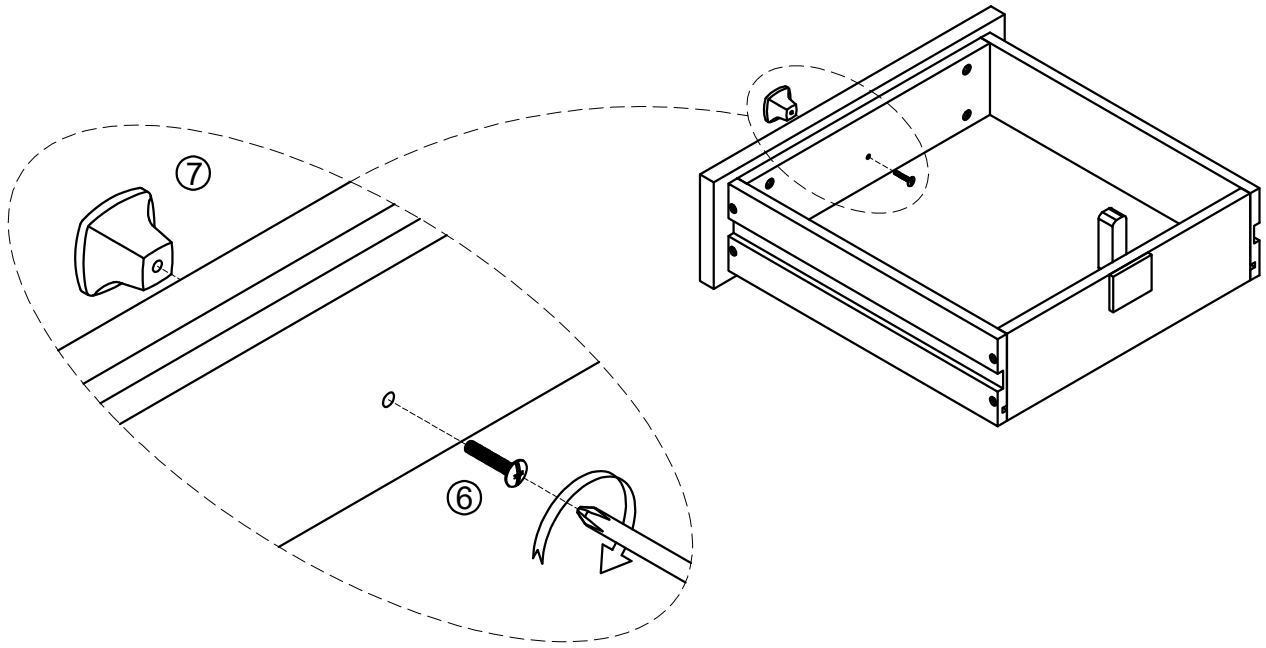

STEP 12

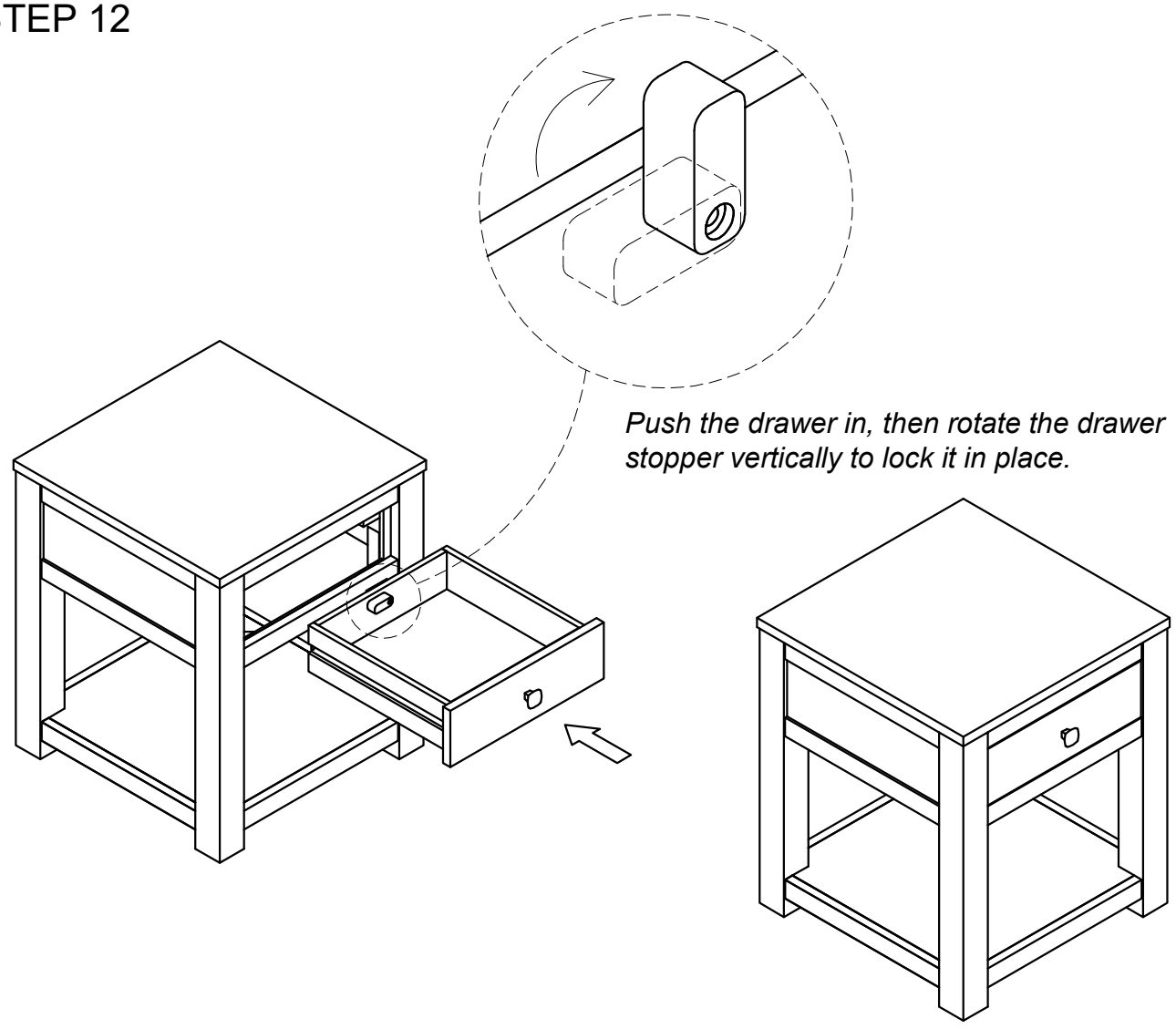

Push the drawer in, then rotate the drawer stopper vertically to lock it in place.