ASSEMBLY INSTRUCTIONS

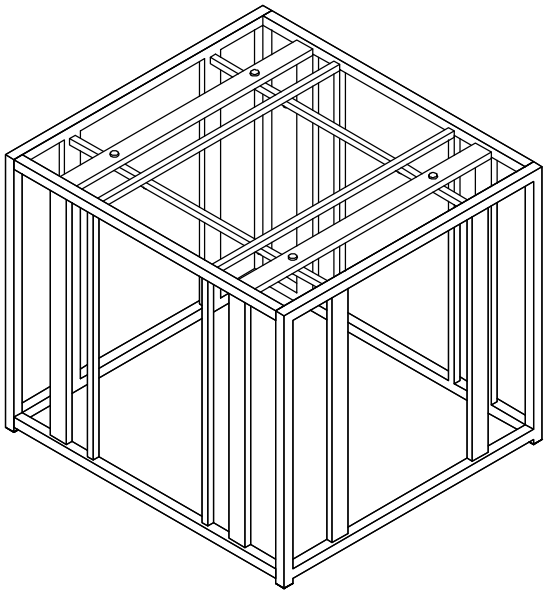

Fine Furniture for every stage of life

END TABLE

ASSEMBLY INSTRUCTIONS

ASSEMBLY TIPS:

1. Remove hardware from box and sort by size.
2. Please check to see that all hardware and parts are present prior to start of assembly.
3. Please follow attached instructions in the same sequence as numbered to assure fast & easy assembly.

WARNING!

1. Don't attempt to repair or modify parts that are broken or defective. Please contact the store immediately.
2. This product is for home use only and not intended for commercial establishments.

ASSEMBLY TIME	35 MINUTES

PARTS IDENTIFICATION

A	TOP GLASS	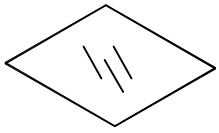	1PC
B	SIDE FRAME	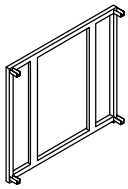	2PCS
C	FRONT AND BACK FRAME	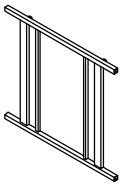	2PCS
D	WIDE CROSSBAR	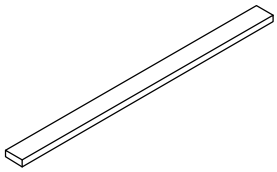	2PCS
E	THIN CROSSBAR	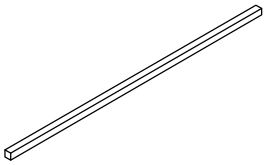	2PCS
F	SUPPORT CROSSBAR	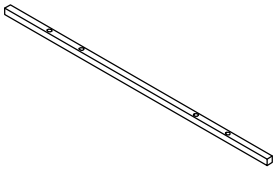	2PCS

ASSEMBLY INSTRUCTIONS

HARDWARE IDENTIFICATION

1	SHORT BOLT (1/4" x 12mm)		20PCS
2	LONG BOLT (1/4" x 18mm)		8PCS
3	SUCTION CUP (ϕ10mm)		4PCS
4	CAP (20 x 20mm)		4PCS
5	ALLEN WRENCH (4mm)		1PC

ASSEMBLY INSTRUCTIONS

STEP 1

Do not tighten until each step is completed or instructed.

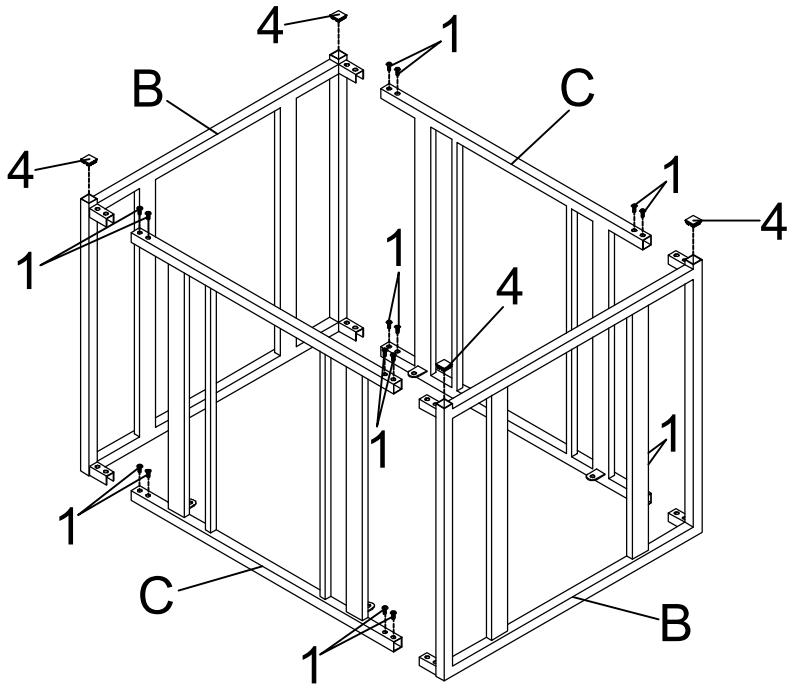

STEP 2

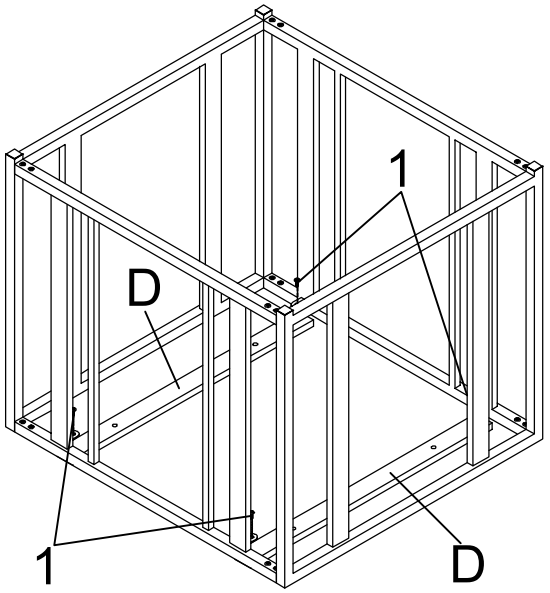

ASSEMBLY INSTRUCTIONS

STEP 3

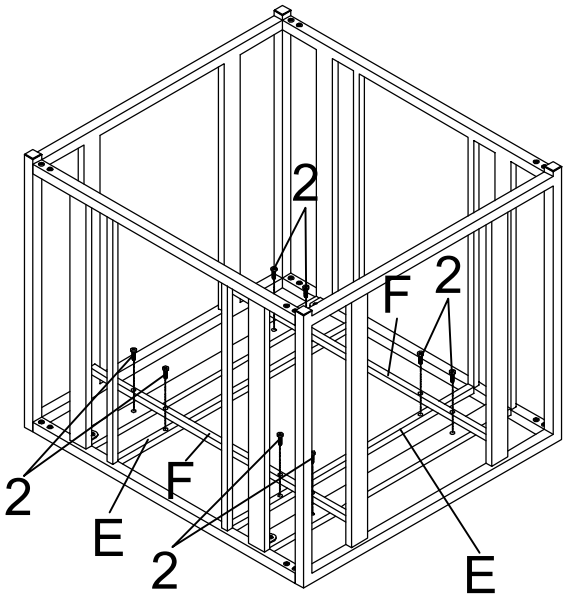

STEP 4

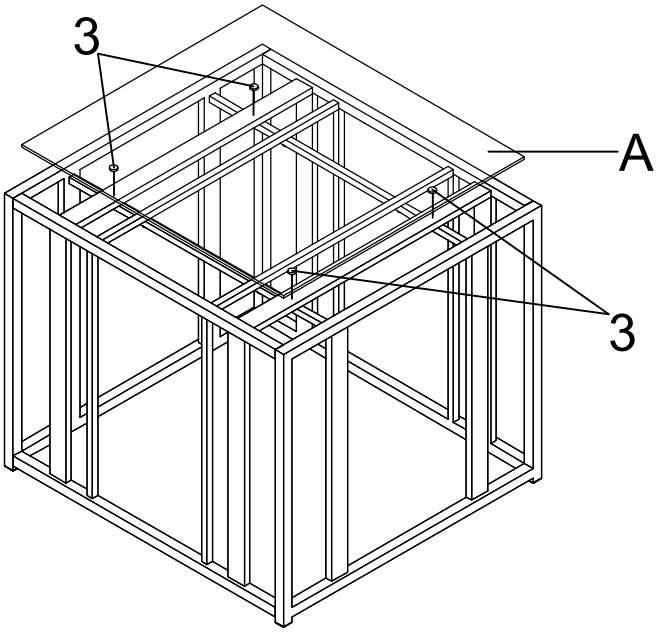

ASSEMBLY INSTRUCTIONS

Product Size : 660 X 610 X 559 H (MM)
Product Size : 26" X 24" X 22"

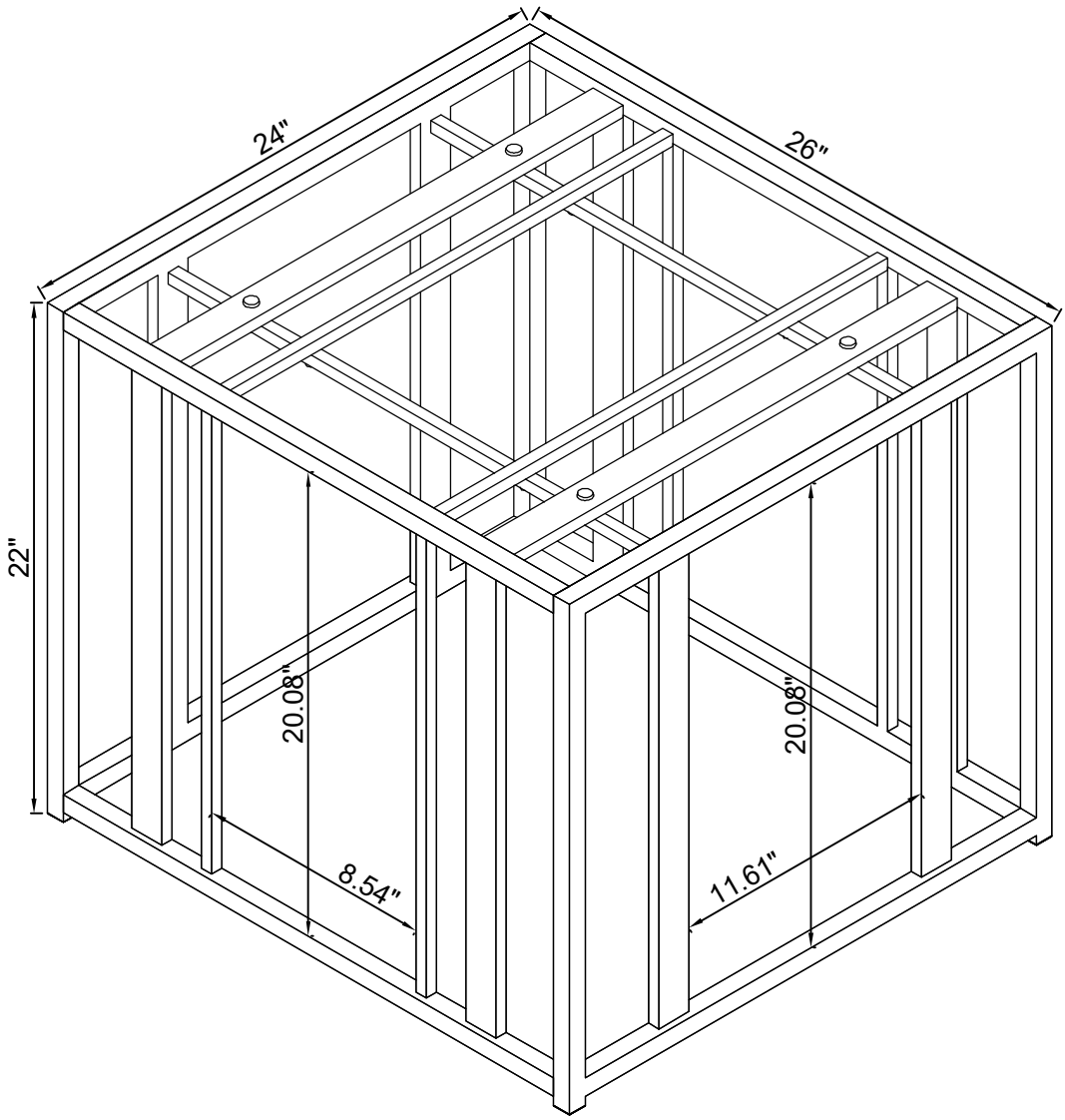

Note : Dimension tolerance ±5%