Desk 006 with Light

100CM | SZT006

Assembly Instructions

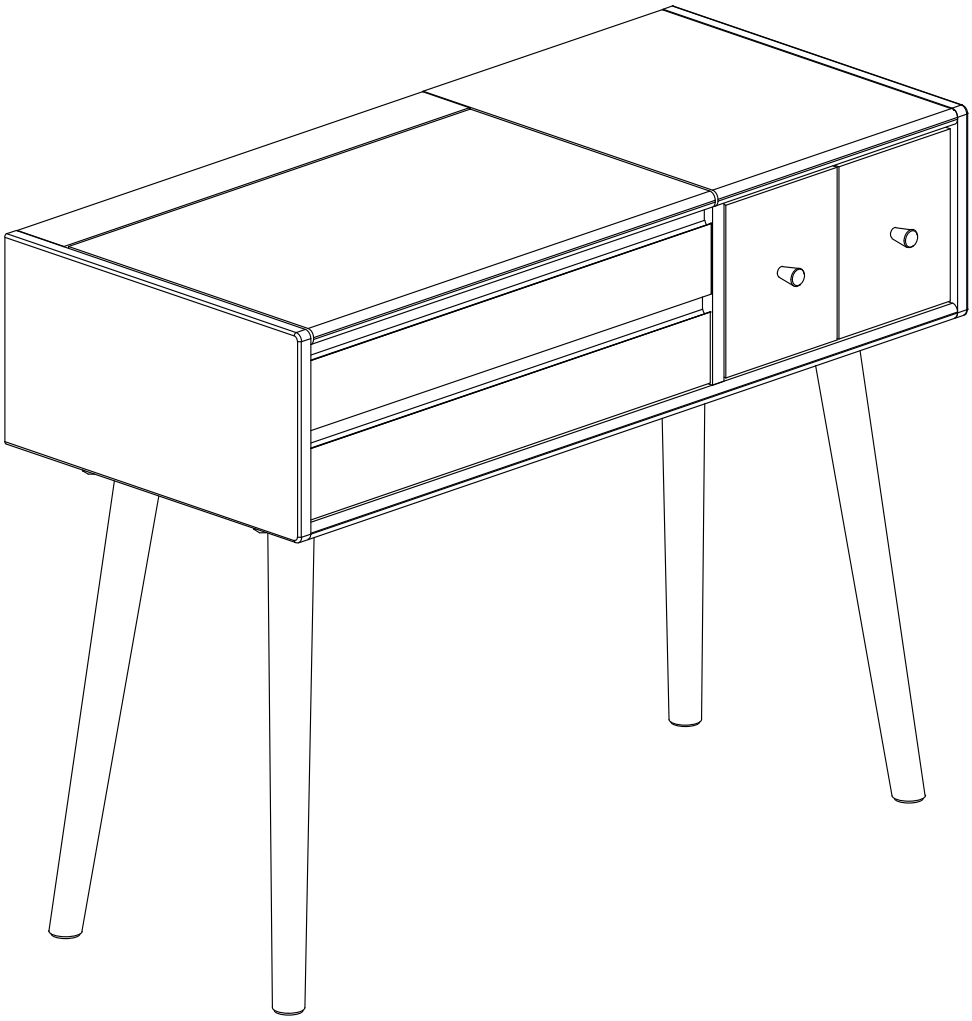

Assembly Overview

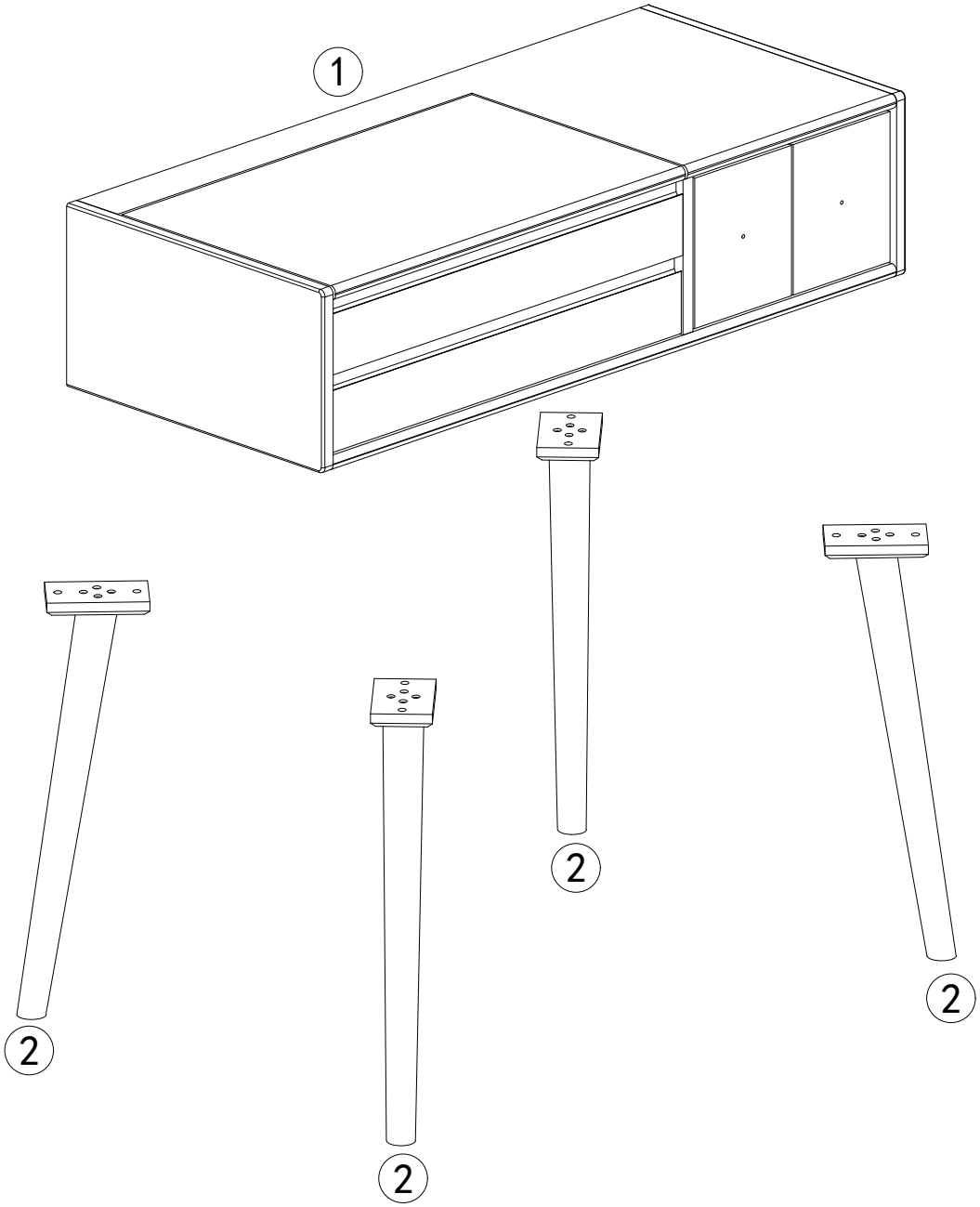

Parts List

1 Cabinet body

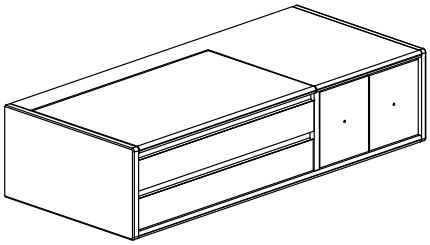

1000 × 440 × 236MM

1 PC

2 Leg

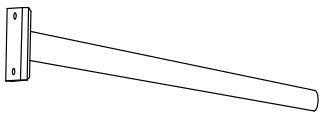

544 × 160 × 75MM

4 PCS

3 Inner shelf

Preinstalled

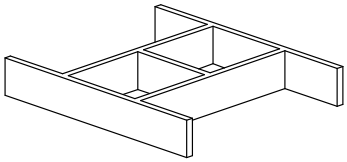

385 × 330 × 50MM

1 PC

4 Flip top

Preinstalled

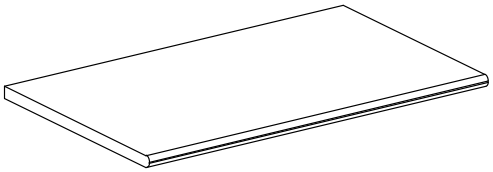

602 × 366 × 18MM

1 PC

Parts List (continued)

5 Right drawer

Preinstalled

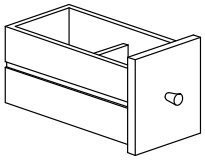

166 × 317 × 196MM

1 PC

6 Middle drawer

Preinstalled

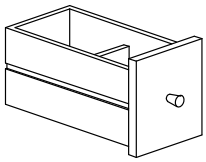

166 × 317 × 196MM

1 PC

7 Lower left drawer

Preinstalled

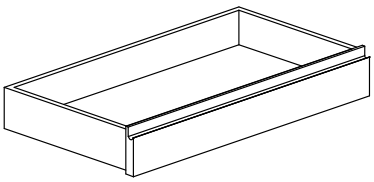

602 × 317 × 97MM

1 PC

Hardware List

A Hex socket bolt

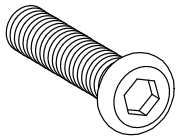

M8 × 25MM

8 + 2 PCS

B Spring washer

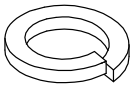

M8

8 + 2 PCS

C Flat washer

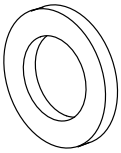

M8 × 16MM

8 + 2 PCS

F Non-woven fabric pad

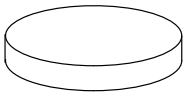

Ø25 × 3MM

4 + 1 PCS

Hardware List (continued)

E Anti-tip hardware kit

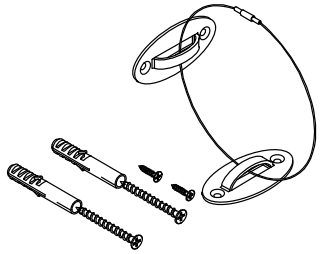

Includes screws and wall anchors.

1 SET

H Tapered handle

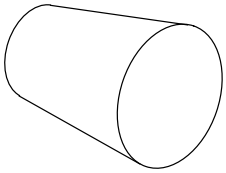

Ø20MM × 23MM

2 PCS

I Phillips large flat-head bolt

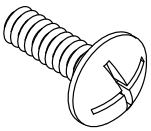

M4 × 32MM

2 PCS

Tools & Preinstalled Hardware

D Hex key

M5 × 100MM

1 PC (reusable)

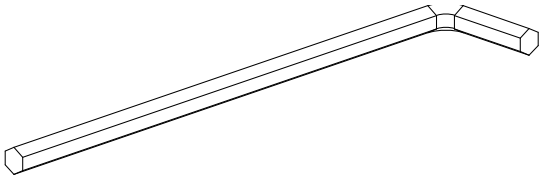

G Phillips screwdriver

Ø6 × 128mm

1 PC (reusable)

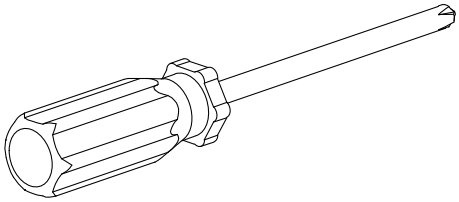

J Adjustable soft-close hinge

Light-duty | Preinstalled

2 PCS

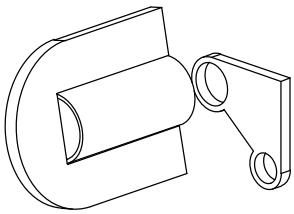

Important

Using the correct screws prevents damage to the components.

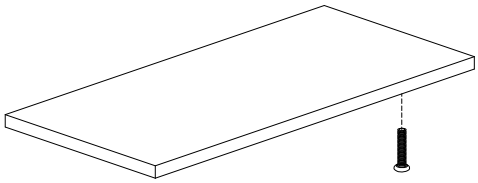

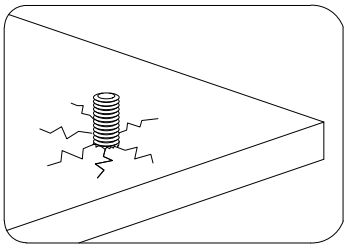

Incorrect screws can split the wood.

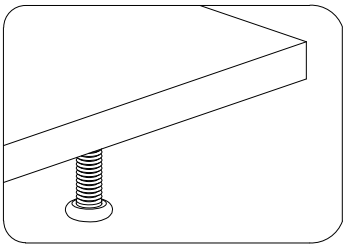

The correct screws fit properly.

Step 1

Attach one pad F to the bottom of each Leg 2, as shown.

F × 4 PCS

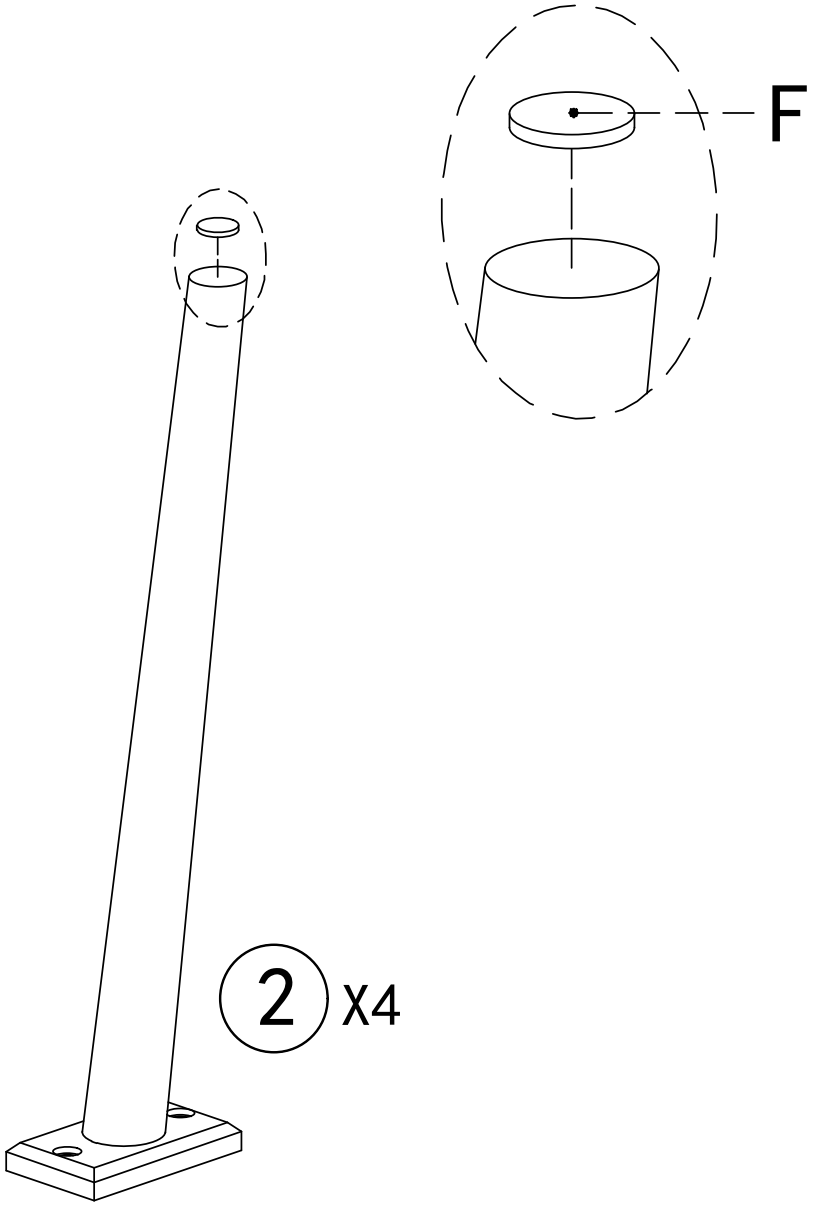

Step 2

Turn Cabinet Body 1 upside down. Attach the four Legs 2 using bolts A, spring washers B, and flat washers C, in the order shown. Tighten the bolts using hex key D.

A × 8 PCS; B × 8 PCS; C × 8 PCS

Tool: D × 1 PC (reusable)

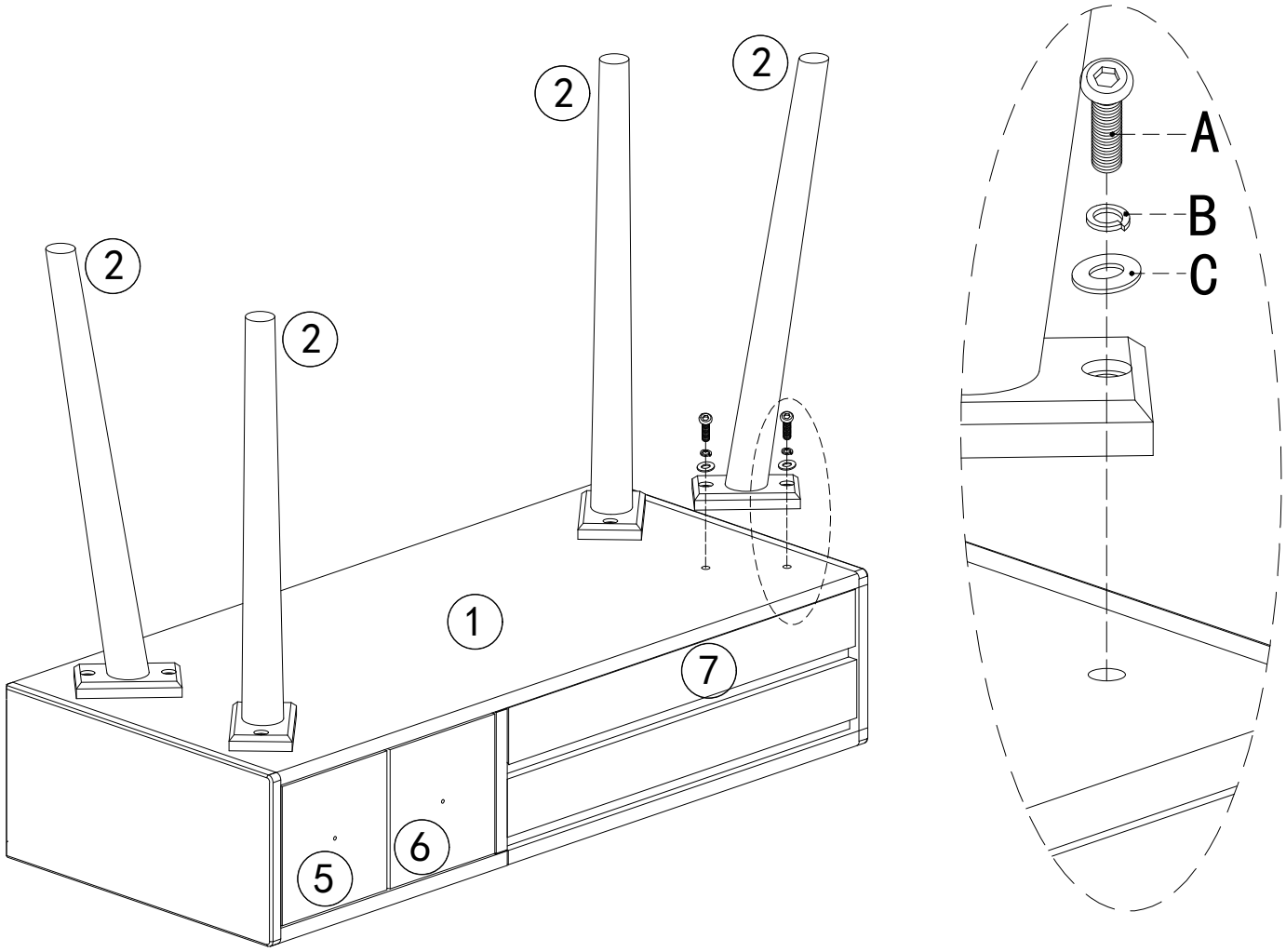

Step 3

Pull out Drawers 5 and 6. From inside each drawer, pass bolt I through the hole in the drawer front and into handle H on the outside. Tighten firmly using screwdriver G.

H × 2 PCS; I × 2 PCS

Tool: G × 1 PC (reusable)

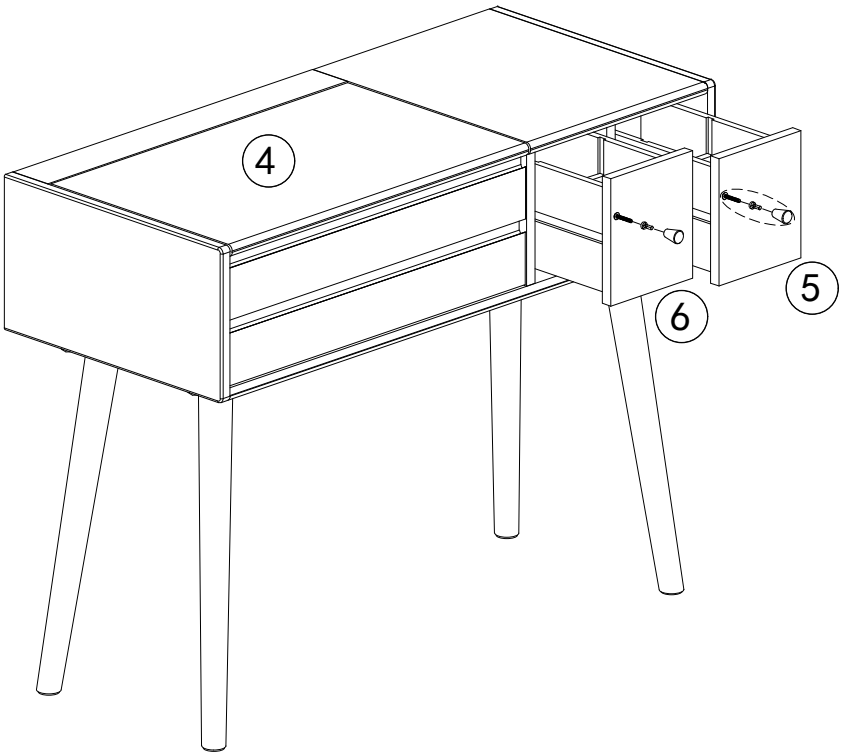

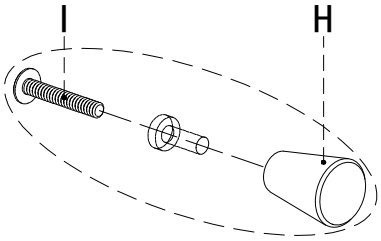

Step 4

Place the desk against the wall. Install anti-tip hardware kit E as shown to prevent tipping and potential injury. Assembly is complete.
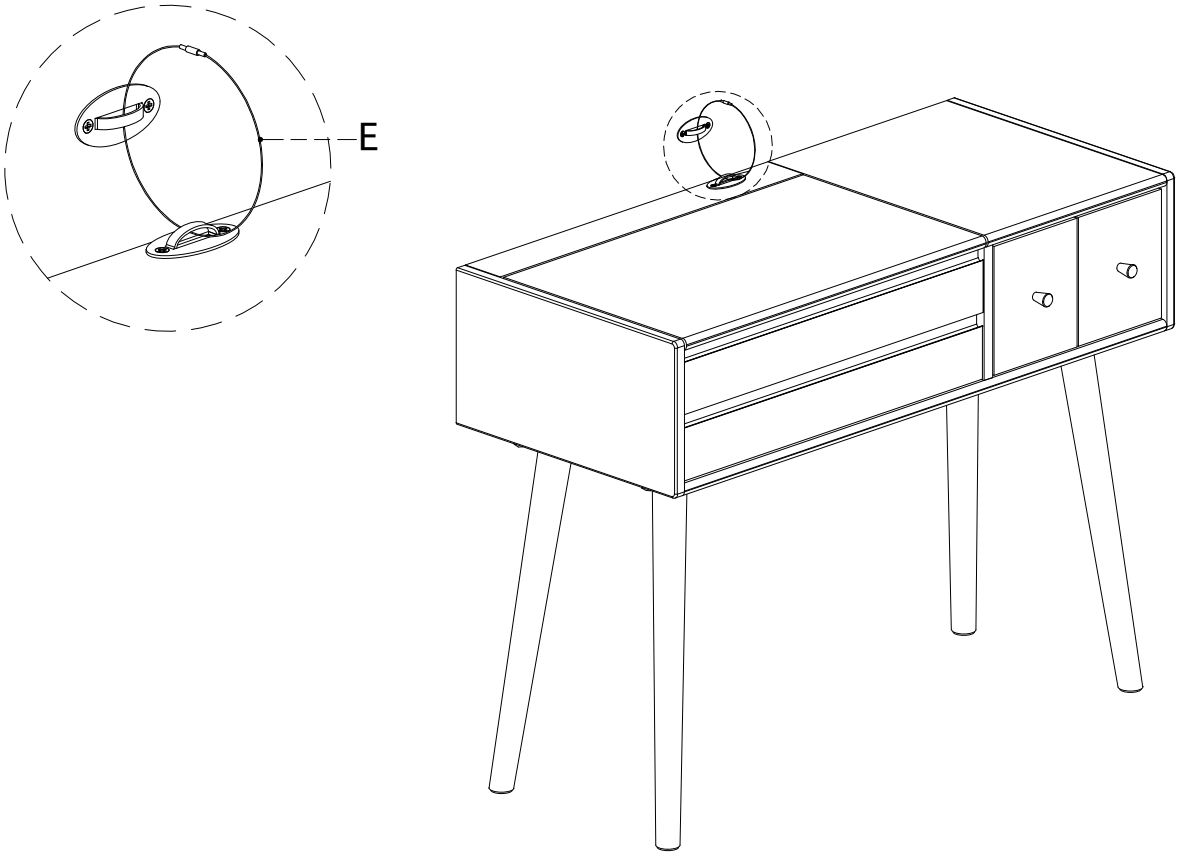
E × 1 SET