Installation & Assembly

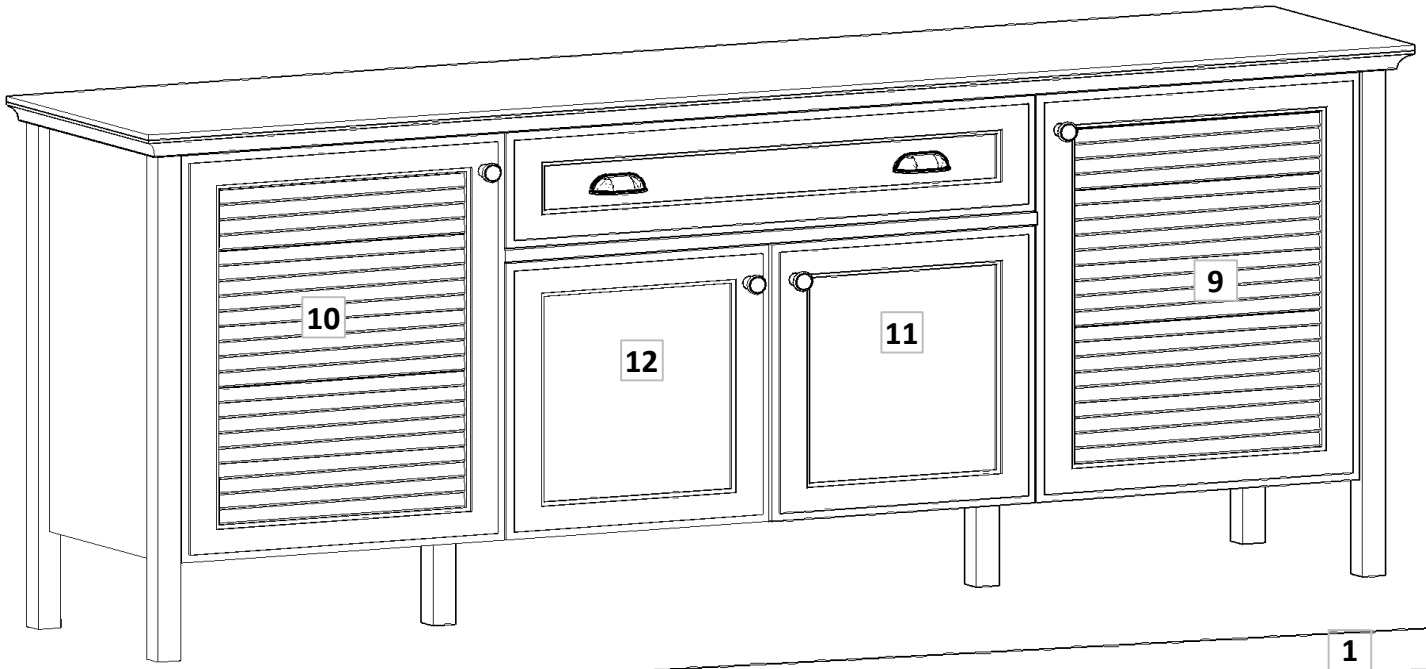

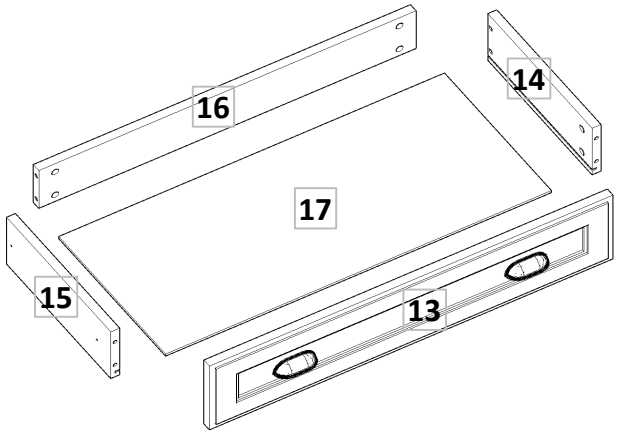

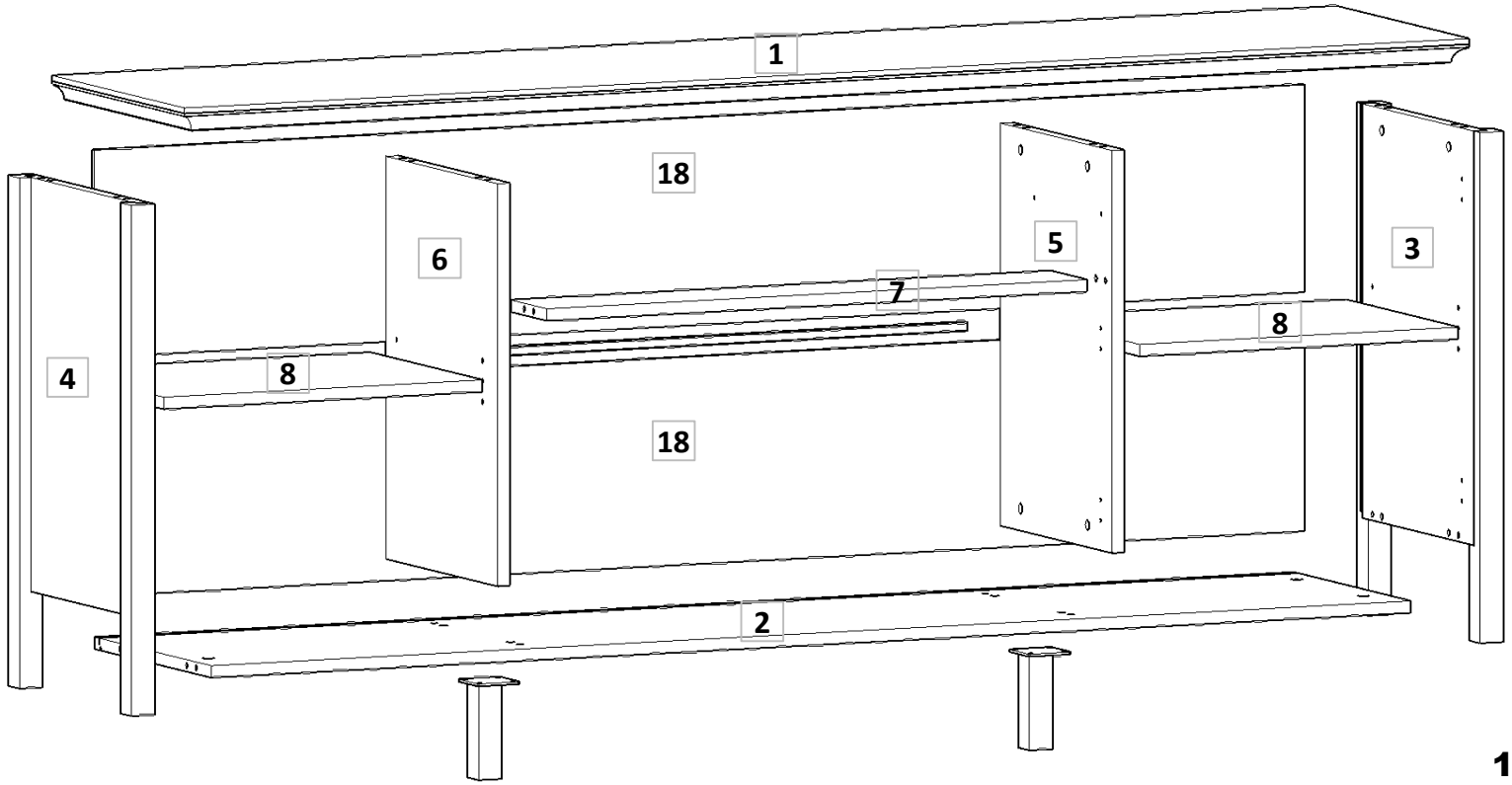

PART LIST

PART NO	PART NAME	QTY.
1	TOP PANEL (2018 mm X 442 mm)	1
2	BASE PANEL (1884 mm X 389 mm)	1
3	RIGHT SIDE PANEL (794 mm X 411 mm)	1
4	LEFT SIDE PANEL (794 mm X 411 mm)	1
5	RIGHT PARTITION PANEL (624 mm X 374 mm)	1
6	LEFT PARTITION PANEL (626 mm X 374 mm)	1
7	MIDDLE FIXED PART (848 mm X 120 mm)	1
8	RIGHT&LEFT REMOVABLE SHELVES (500mmX374mm)	2
9	RIGHT OUTER DOOR (629 mm X 515 mm)	1
10	LEFT OUTER DOOR (629 mm X 515 mm)	1
11	RIGHT INNER DOOR (427 mm X 419 mm)	1
12	LEFT INNER DOOR (427 mm X 419 mm)	1
13	DRAWER FRONT (842 mm X 178 mm)	1
14	DRAWER RIGHT SIDE (350 mm X 130 mm)	1
15	DRAWER LEFT SIDE (350 mm X 130 mm)	1
16	DRAWER BACK PANEL (787 mm X 105 mm)	1
17	DRAWER BOTTOM (5mm) (805 mm X 359 mm)	1
18	BACK PANEL (5mm)(1902 mm X 322 mm)	2

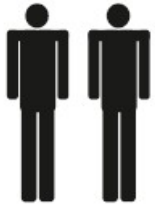


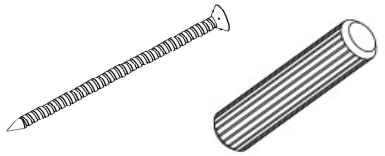

: **A**
Minifix Cam

QTY 26 | Ø:8

: **B**
Minifix Bolt

QTY 26

: **C**
Dowel

QTY 18

: **D**
Countersunk Screw
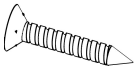
QTY 54 | 3,5x18

: **E**
Handle Screw

QTY 4 | 4x26

: **F**
Countersunk Screw
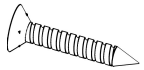
QTY 8 | 4x18

: **G**
Knob Handle
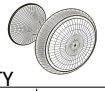
QTY 4

: **H**
Backboard Stabilizer

QTY 14

: **J**
Washer

QTY 8

: **K**
Inset Hinge
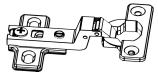
QTY 4

: **L**
Handle Screw

QTY 4 | 4x12

: **M**
Handle
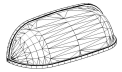
QTY 2

: **N**
Telescopic Drawer Slides
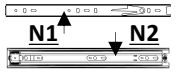

QTY 1 | 350 mm

: **P**
Minifix Cover

QTY 32

: **R**
Felt Pad

QTY 6

: **S**
Leveling Shim
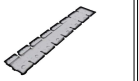
QTY 1

: **T**
Middle Leg
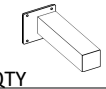
QTY 2

: **V**
Countersunk Screw
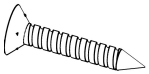
QTY 12 | 3,5x25

: **Y**
Back Panel H Profile

QTY 1 | 838 mm

: **Z**
Soft Close Inset Hinge

QTY 4

: **A1**
Shelf Stud

QTY 8

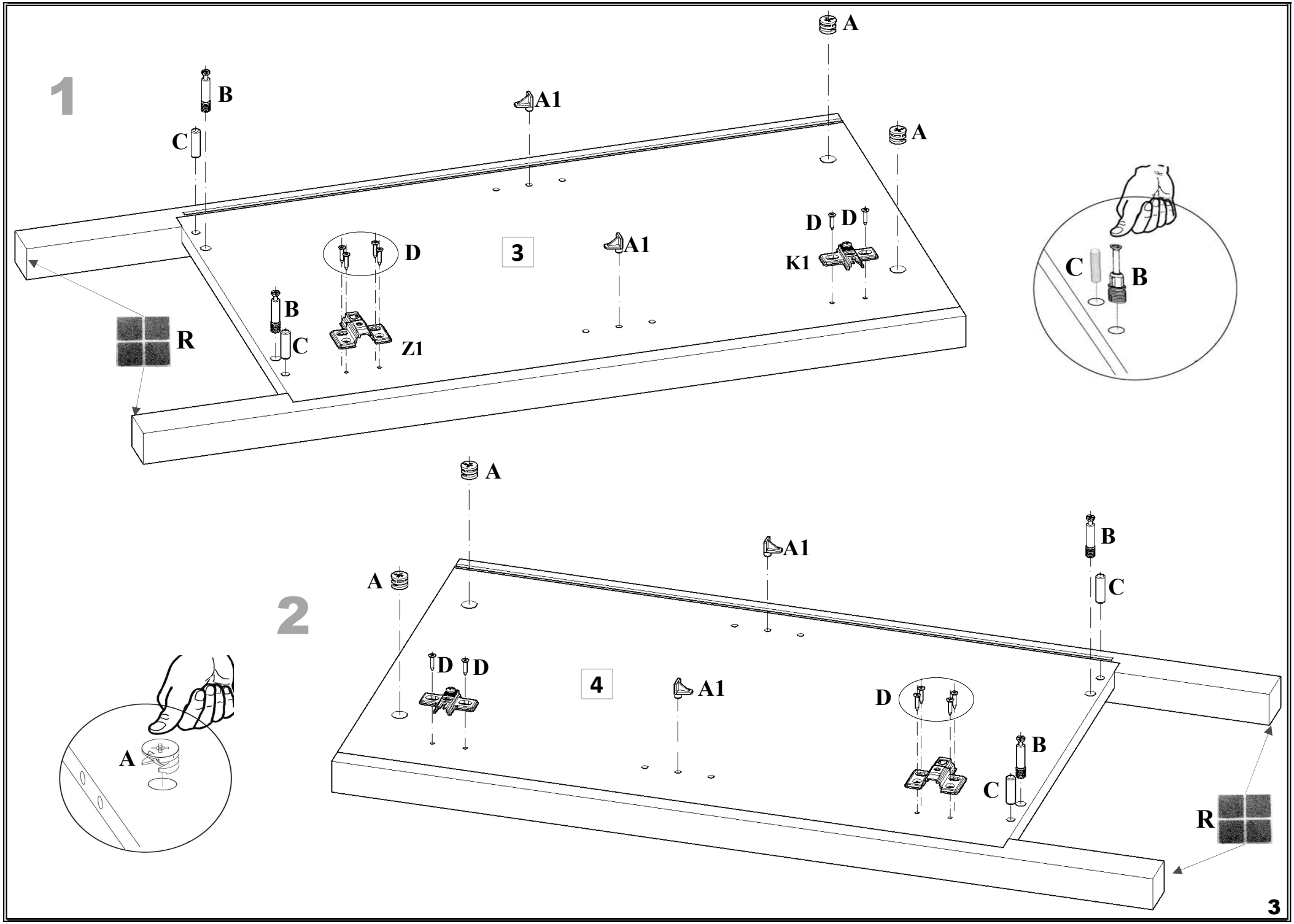
1
A
B
A1
C
A
D
D
D
3
A1
K1
B
C
Z1
R
C
B
2
A
A1
B
A
C
D
D
4
A1
D
B
C
R
A
3

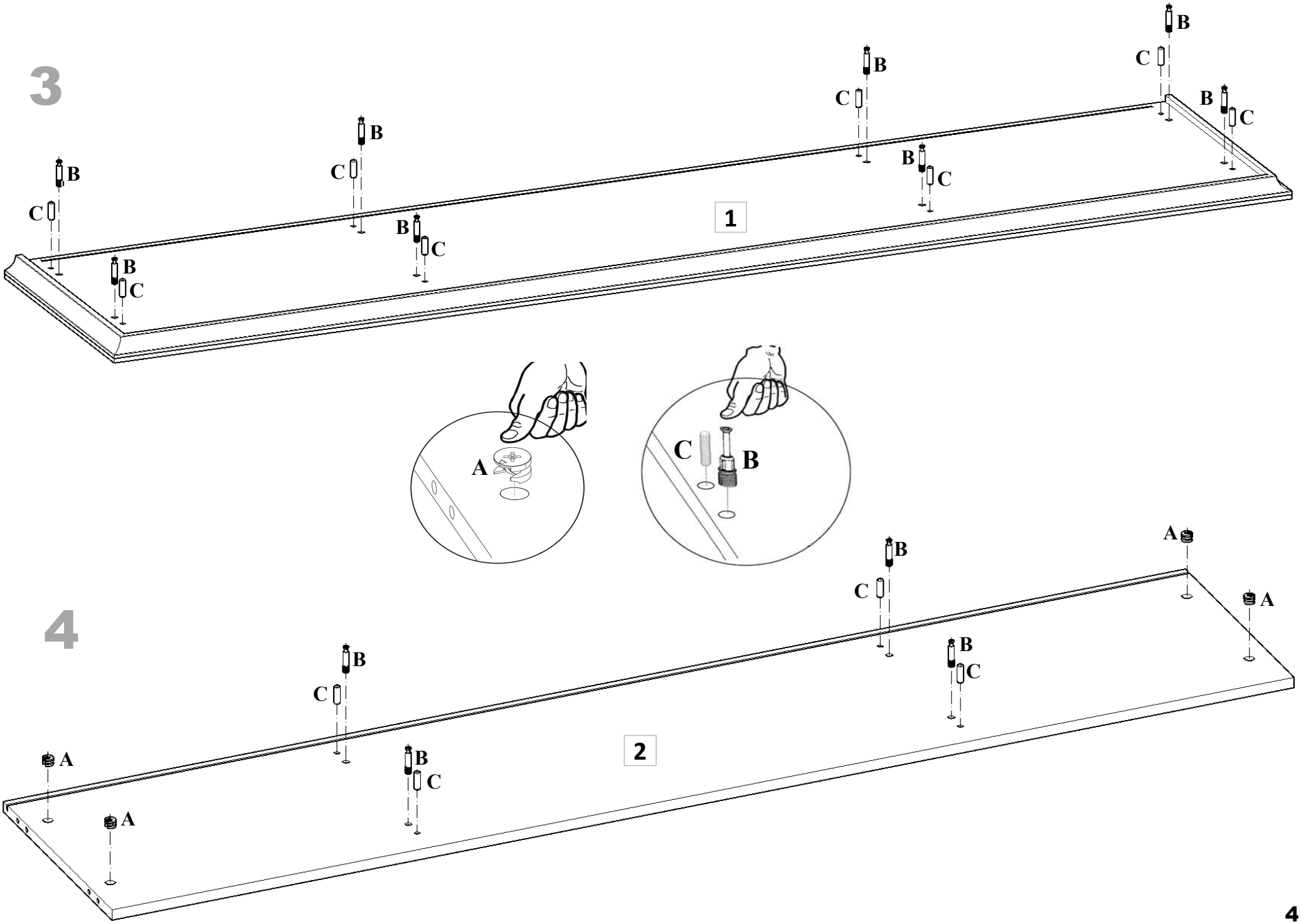
3
B
C
1
A
C
B
4
A
2

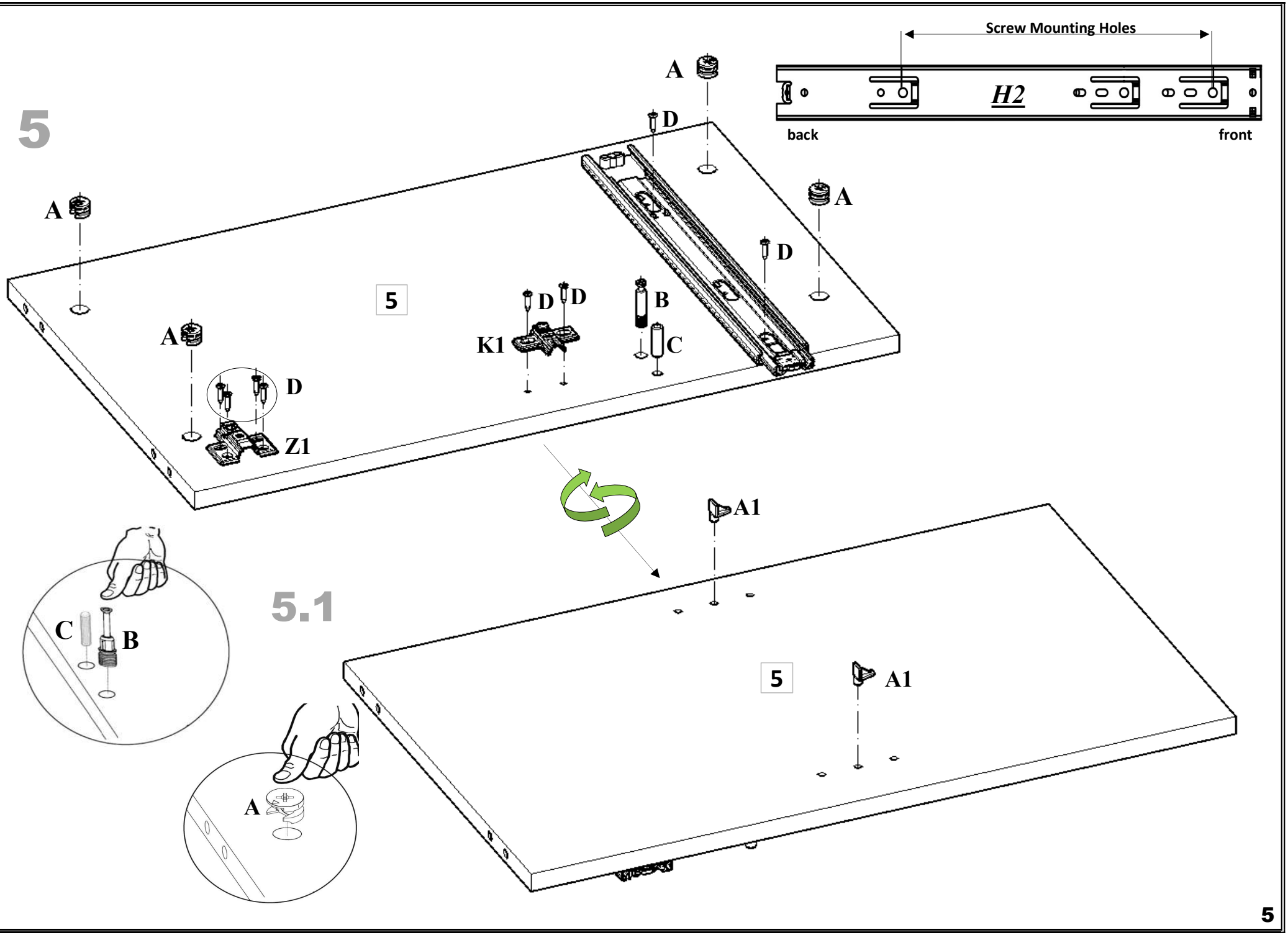
5
Screw Mounting Holes
H2
back
front
A
D
A
A
D
5
D
D
B
K1
C
A
D
Z1
A1
5.1
C
B
5
A1
A

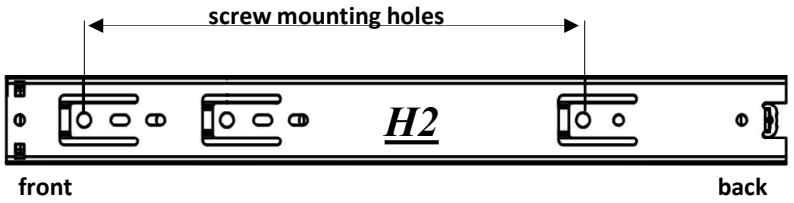
screw mounting holes
H2
front
back

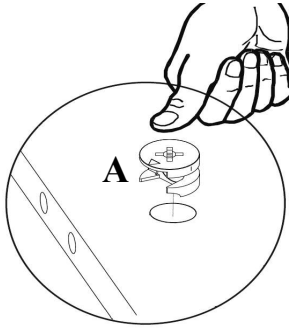
A

6

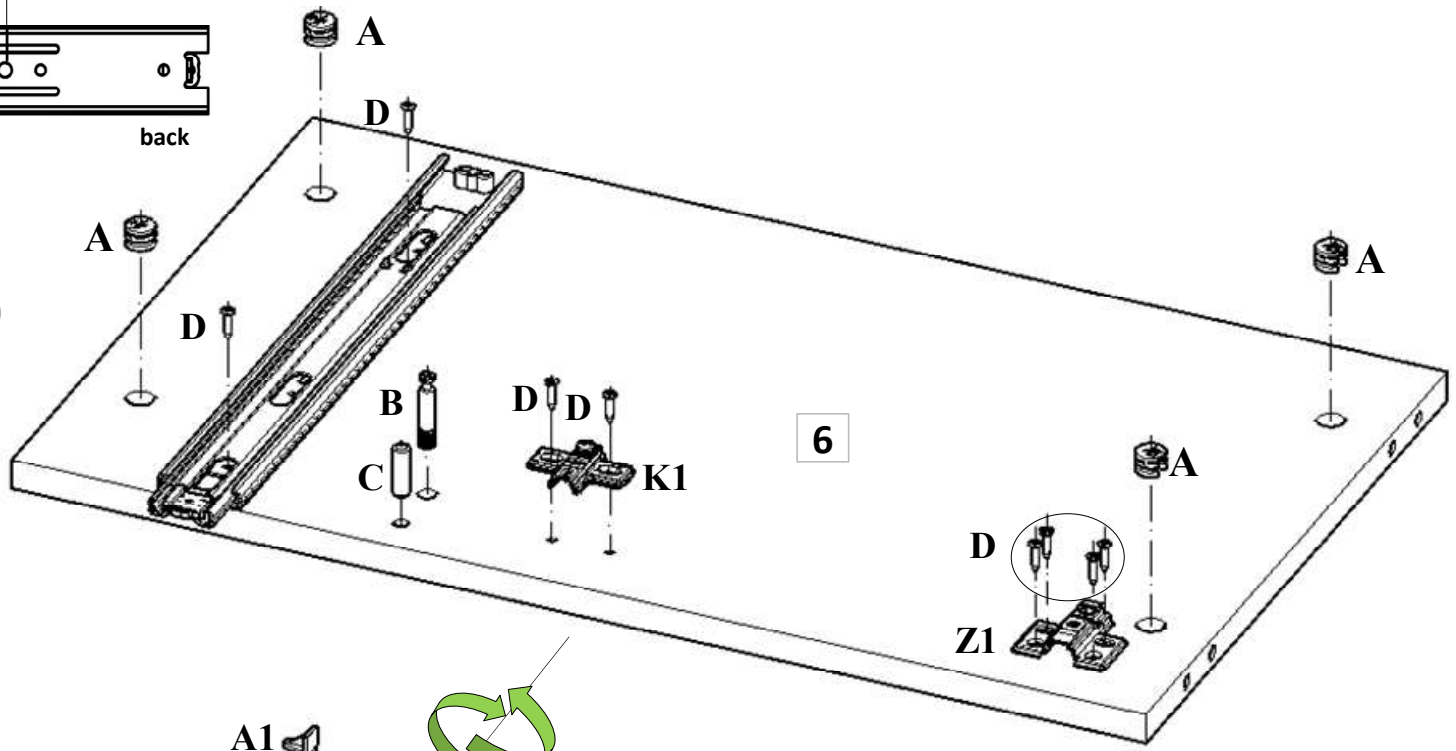
A
D
A
D
B
C
D
D
K1
6
A
D
Z1

6.1

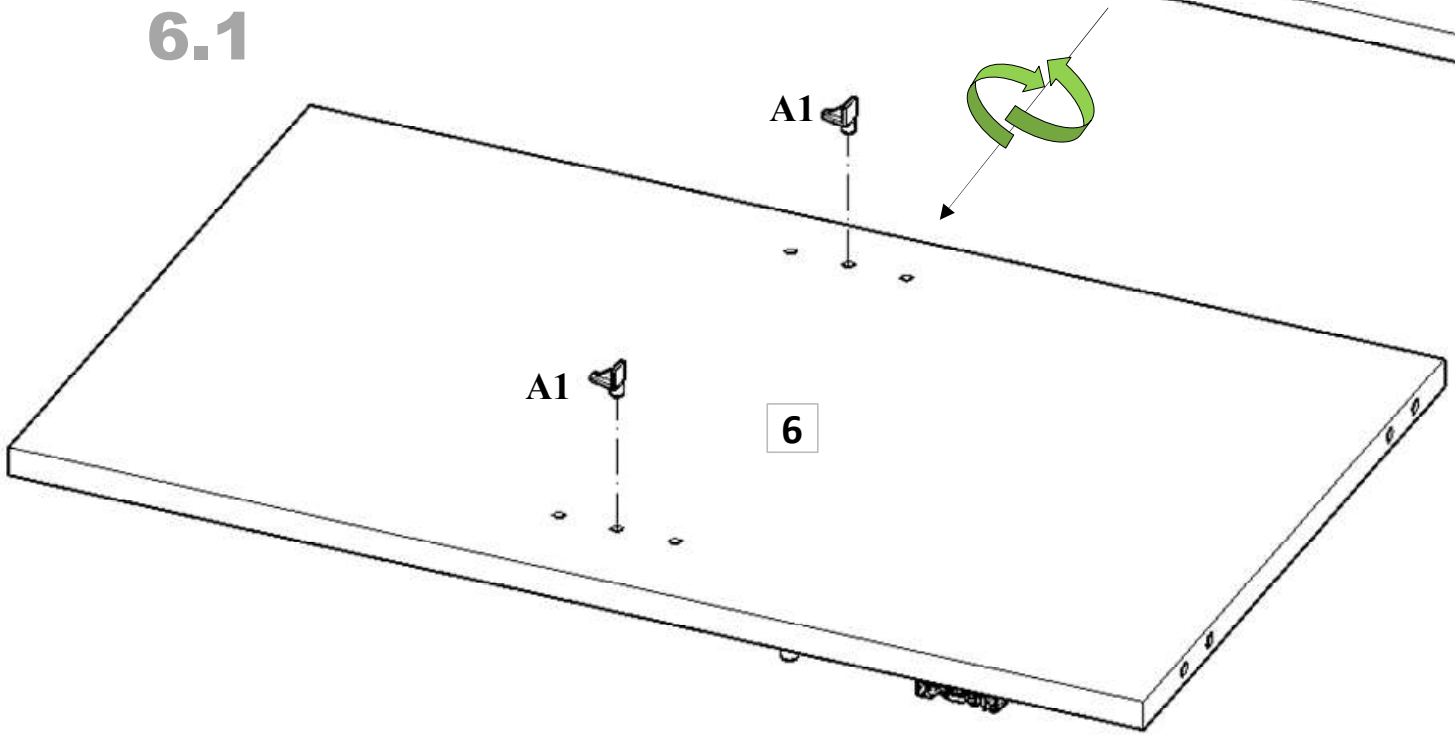
A1
A1
6

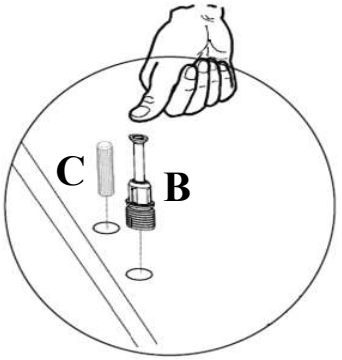
C
B

7

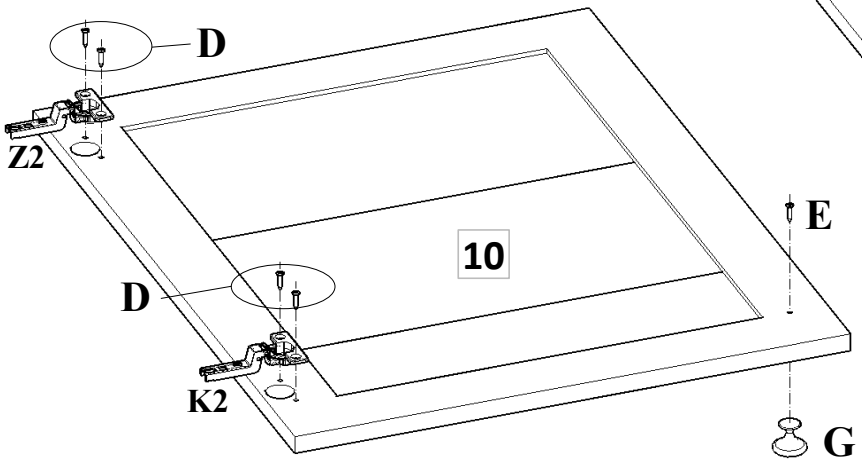

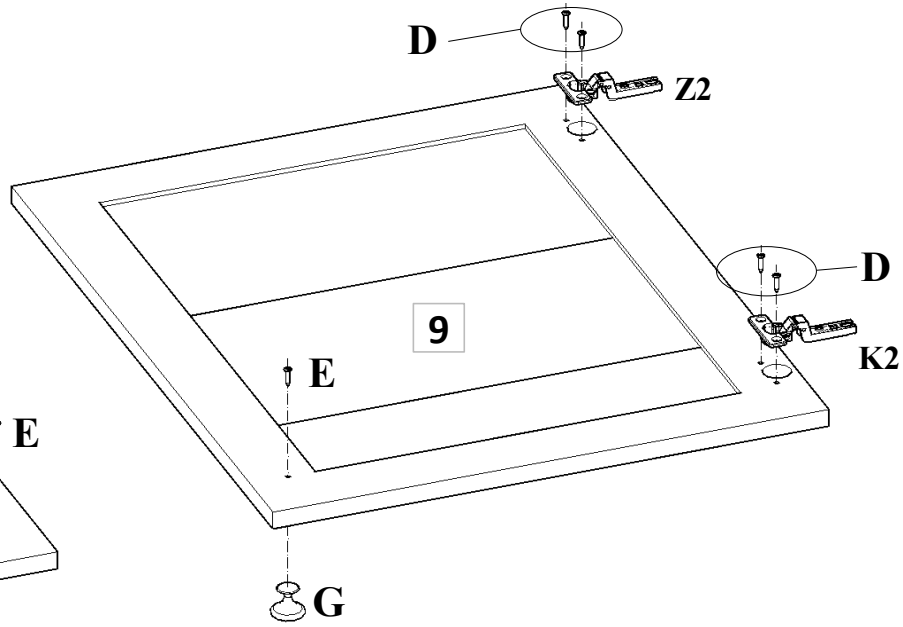

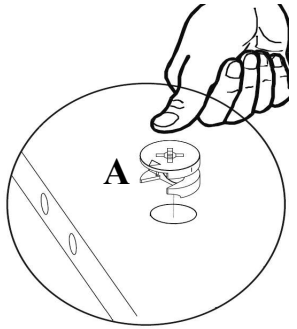

9

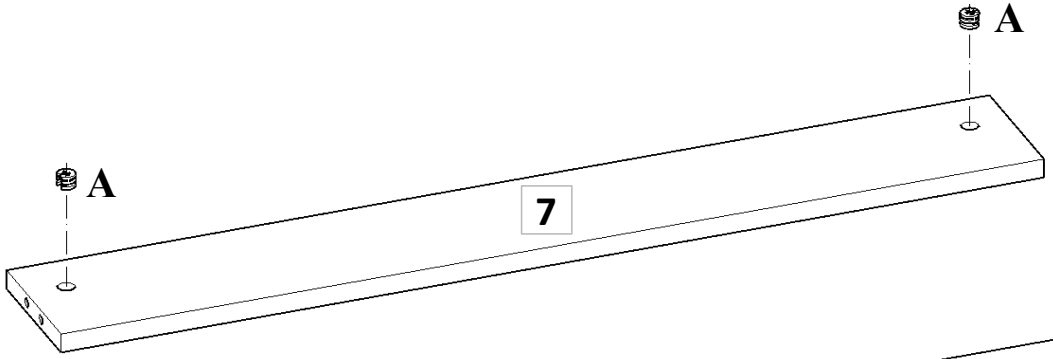

8

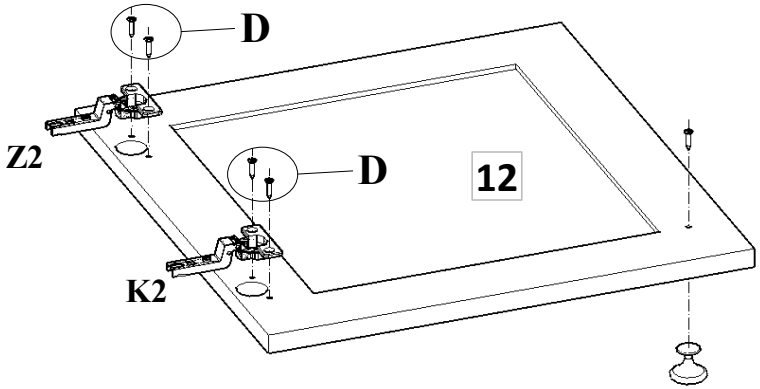

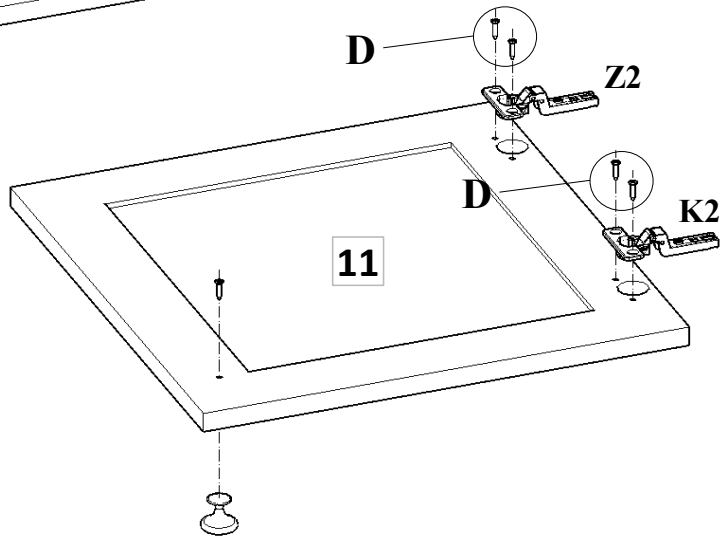

10

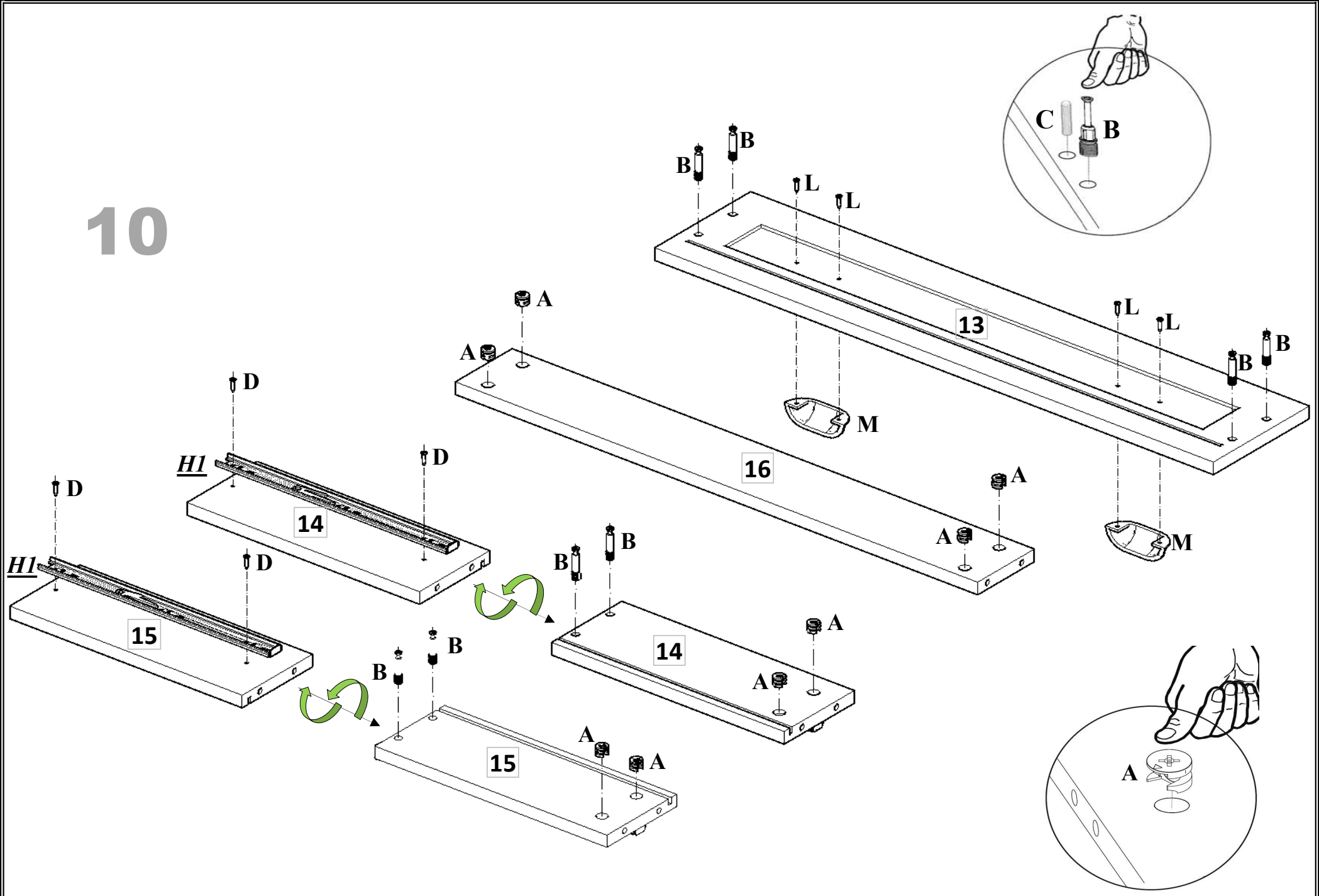

11

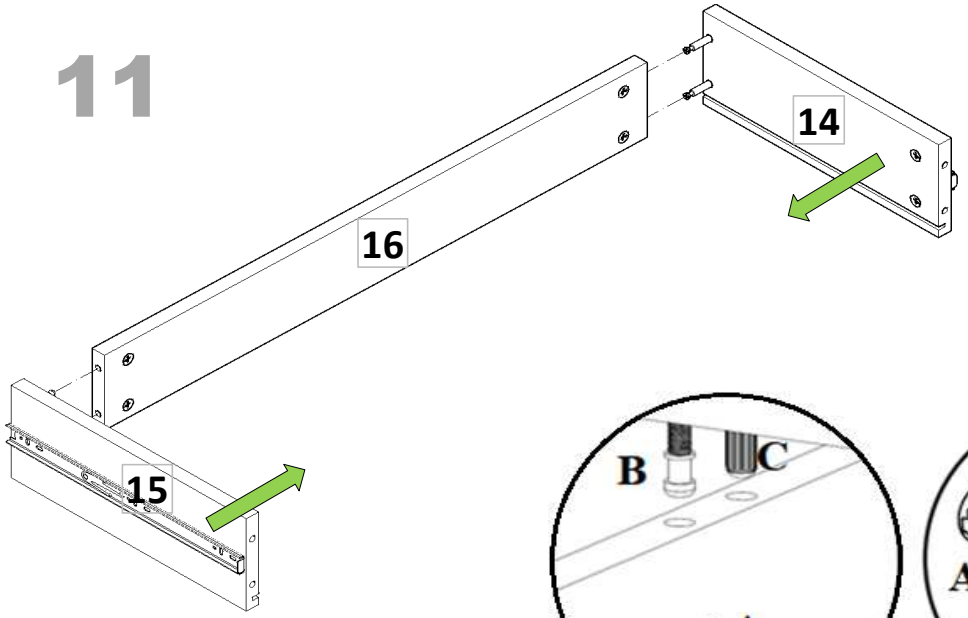

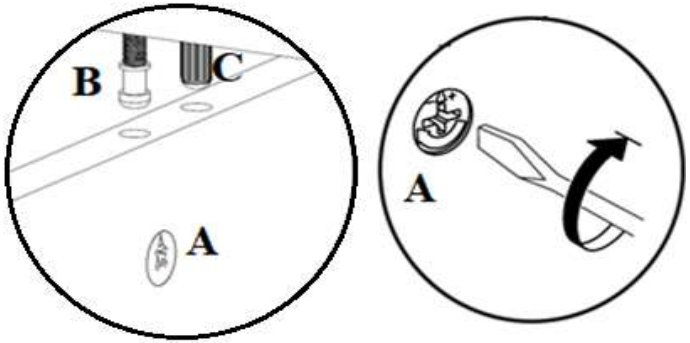

12

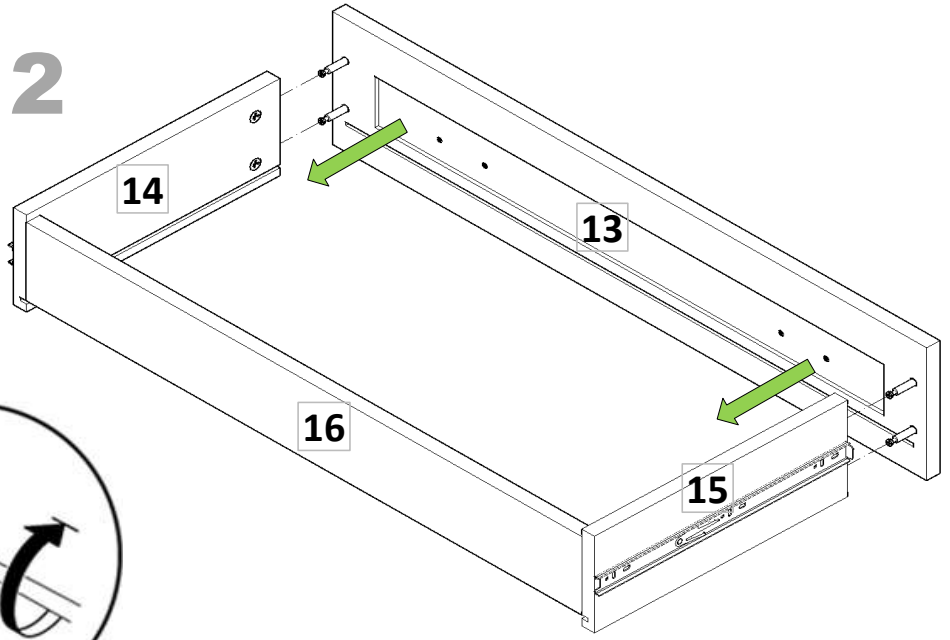

13

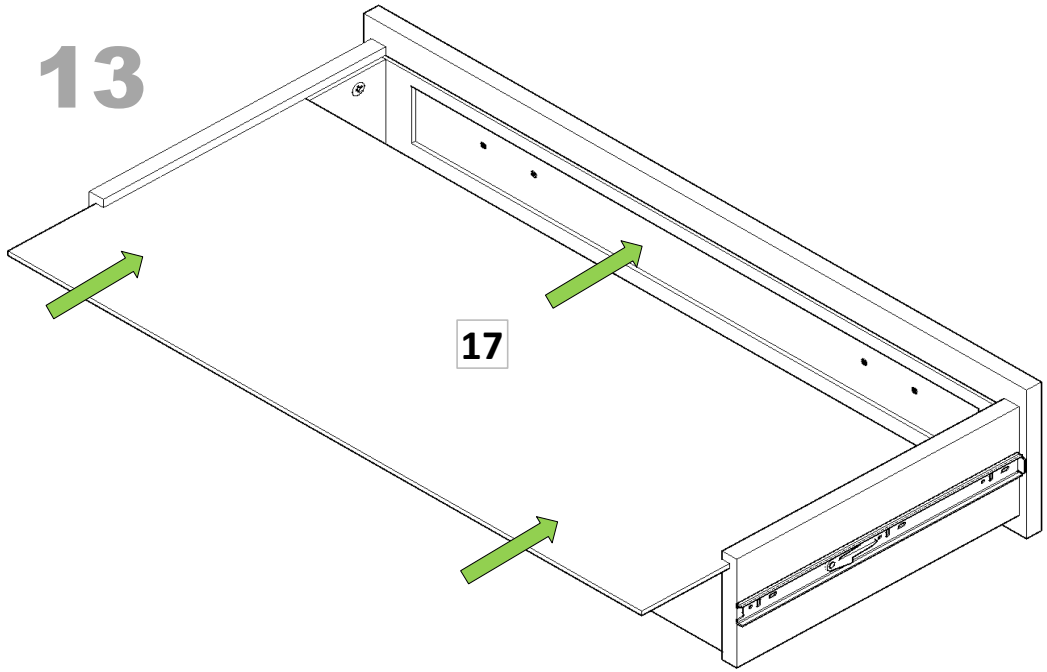

14

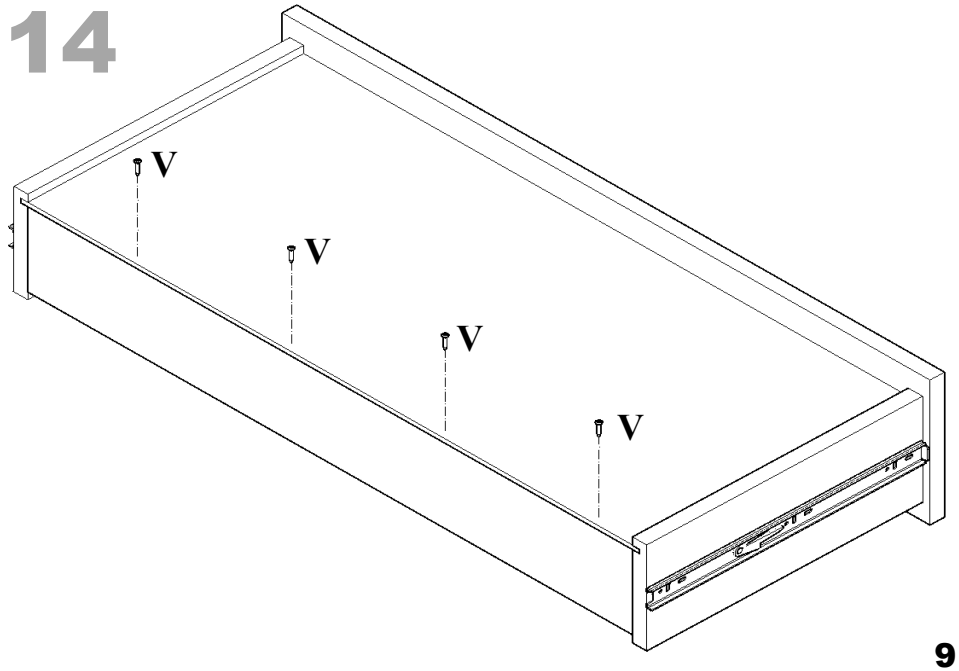

15

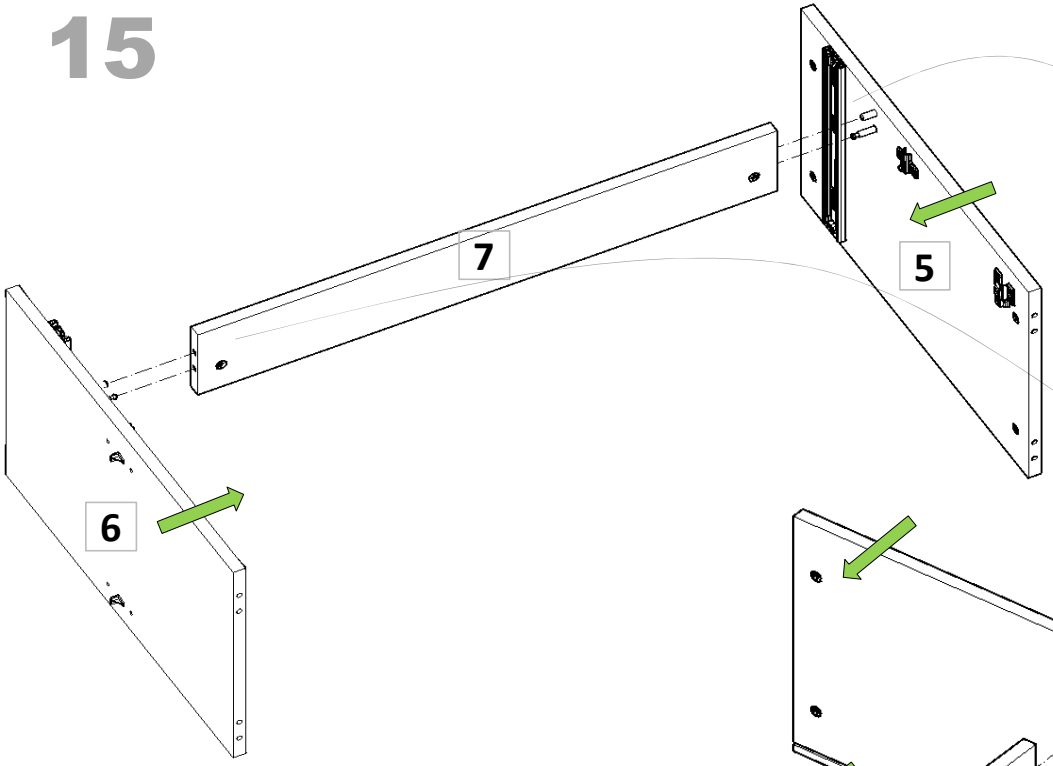

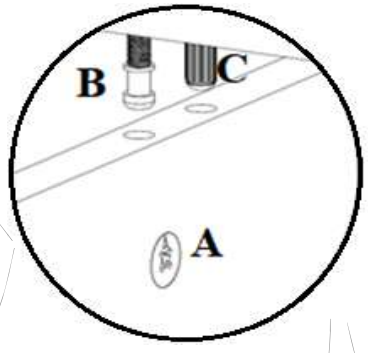



16

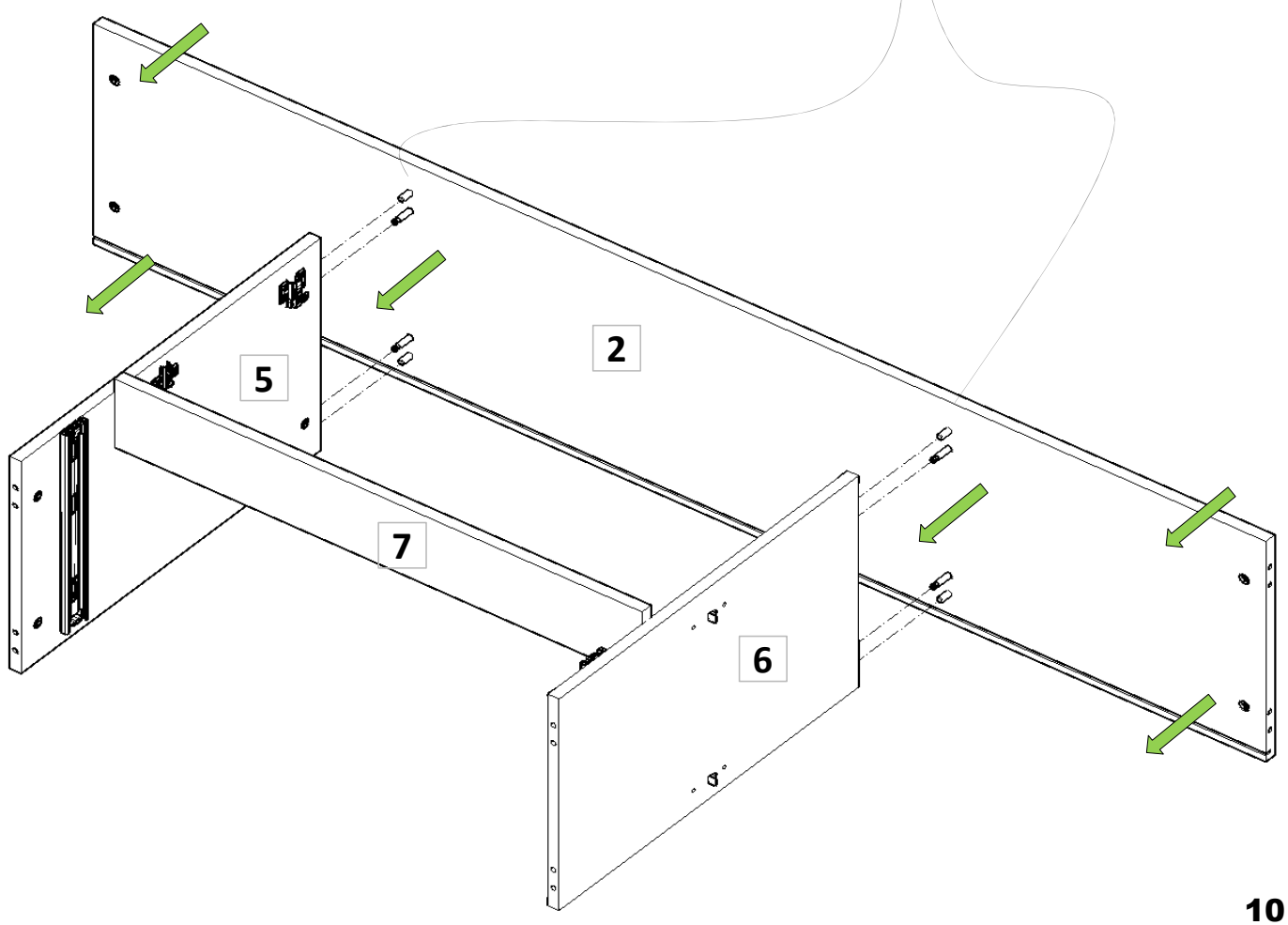

17

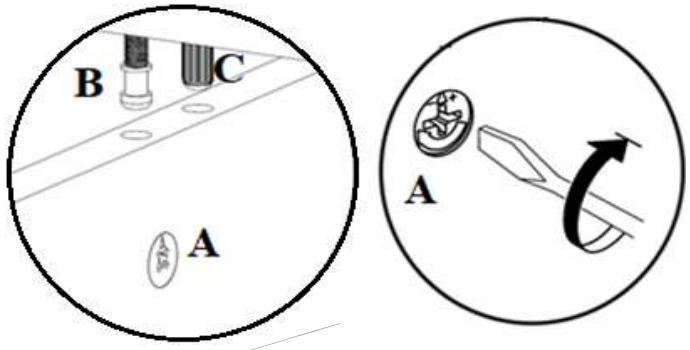

18

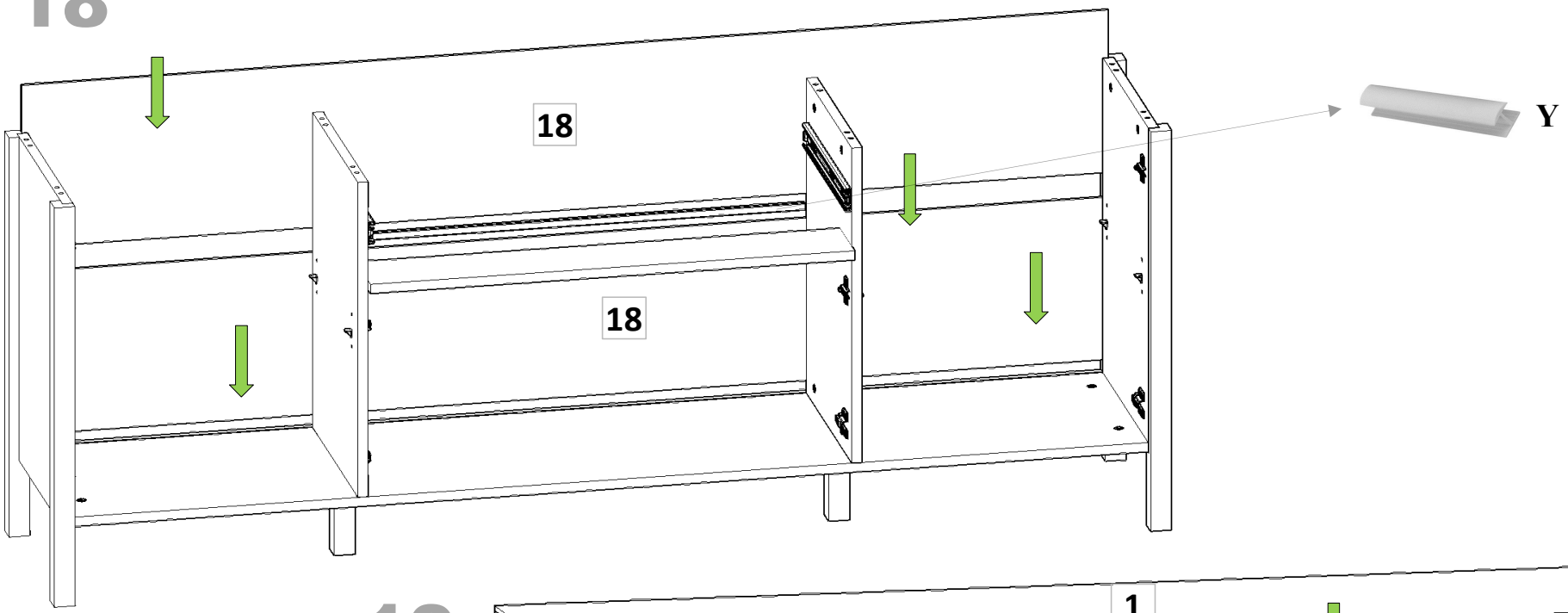

19

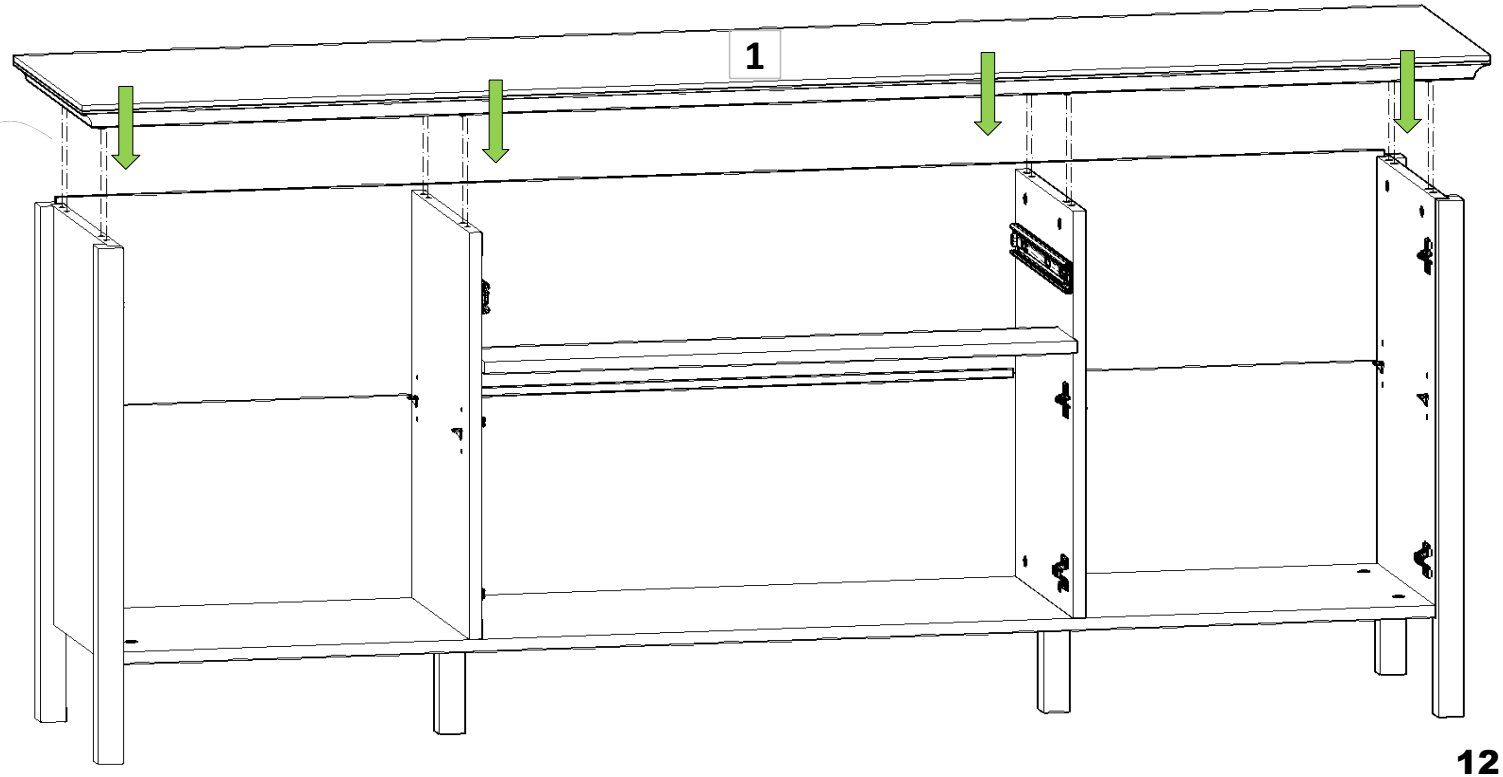

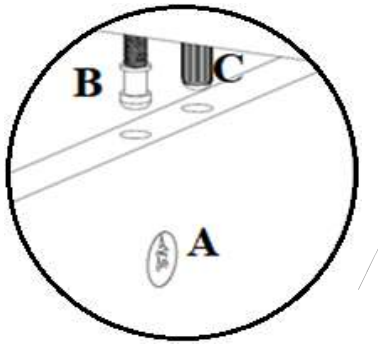



20

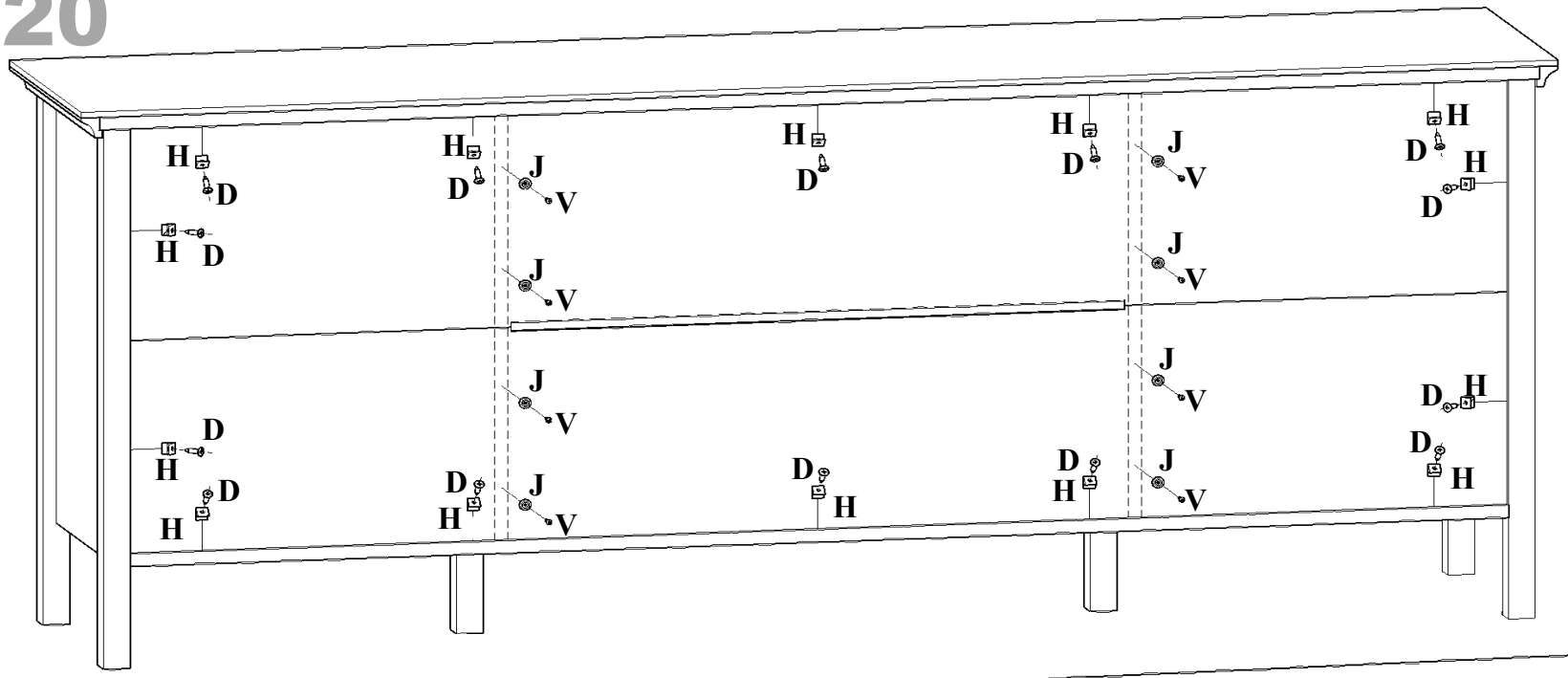

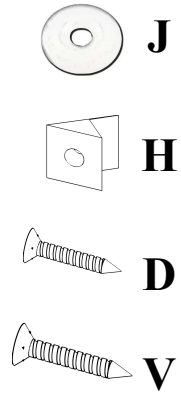

21

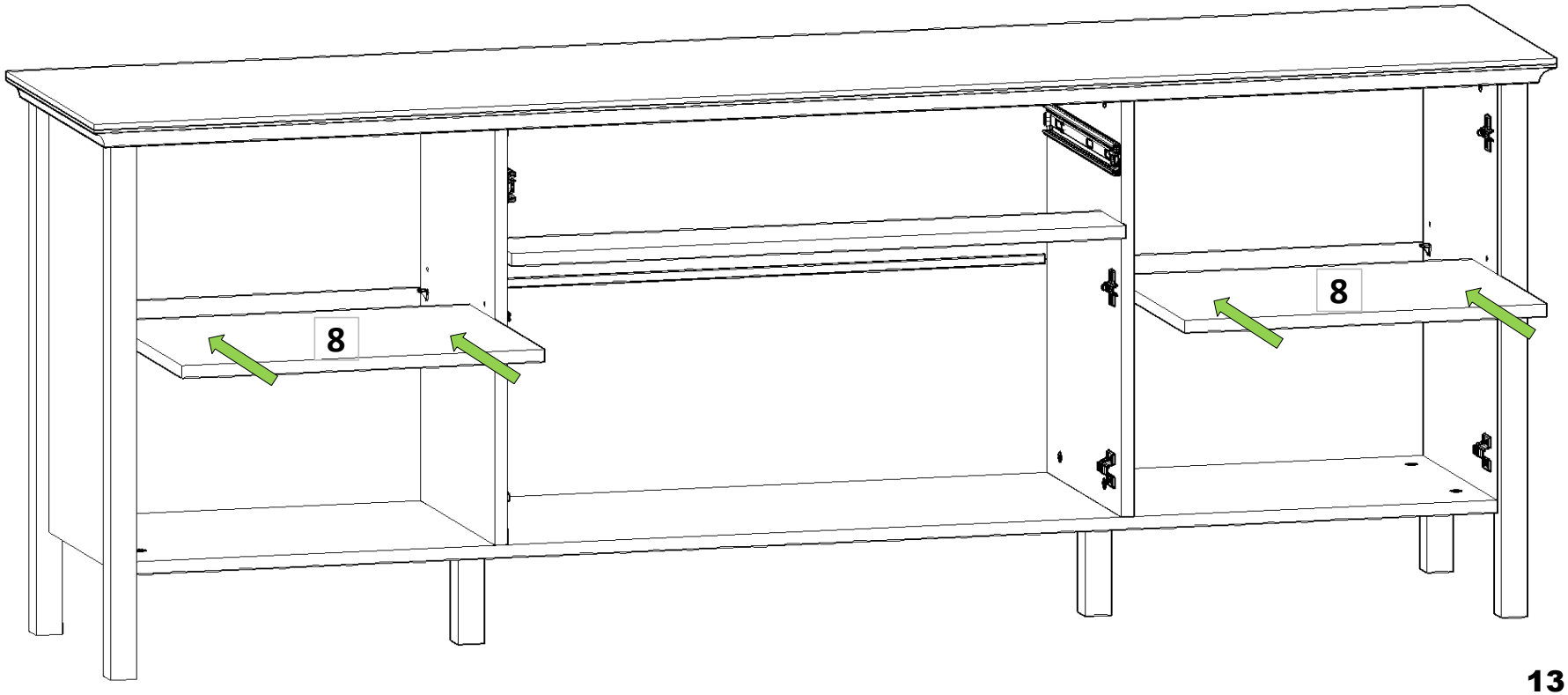

22

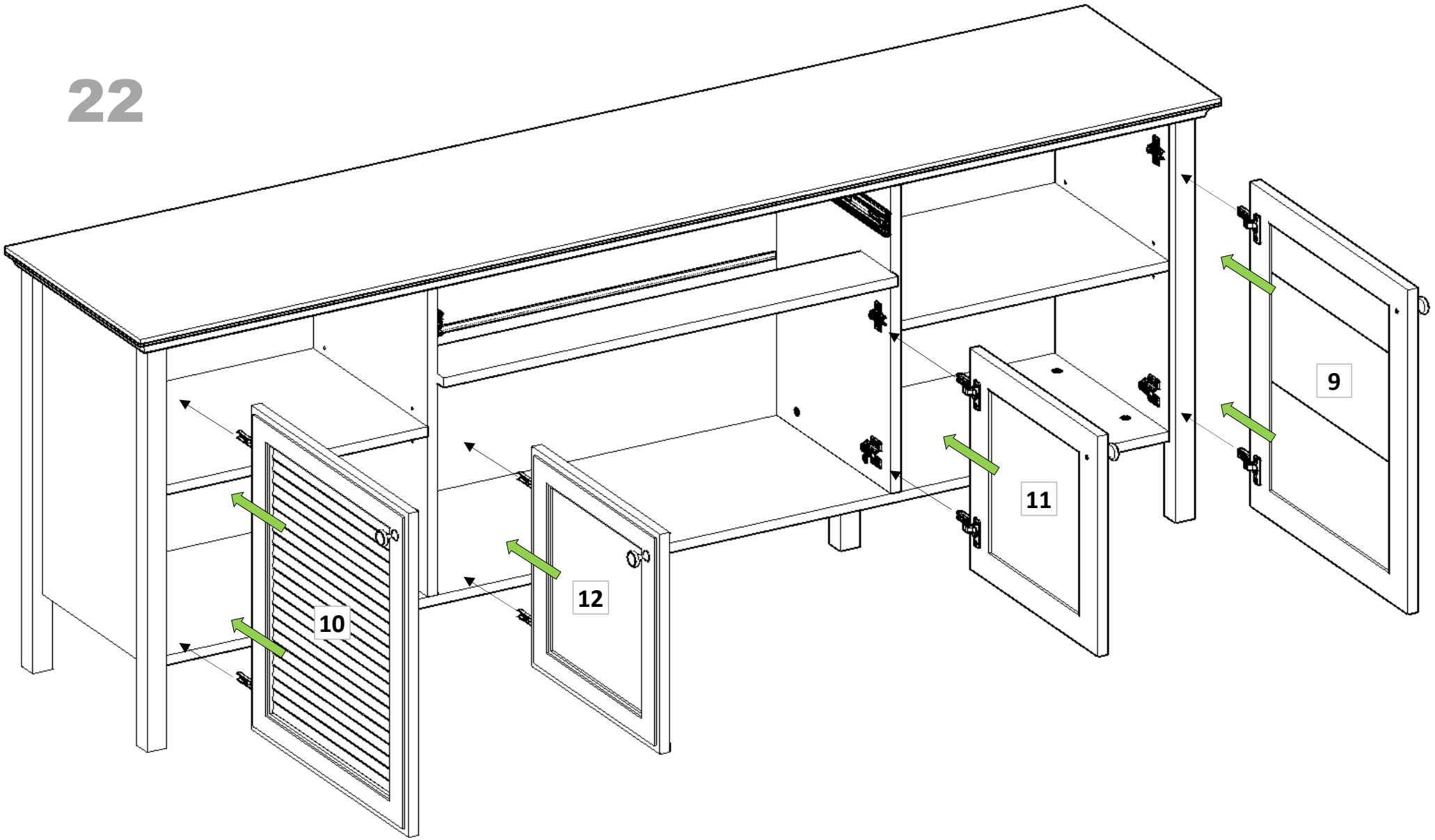

23

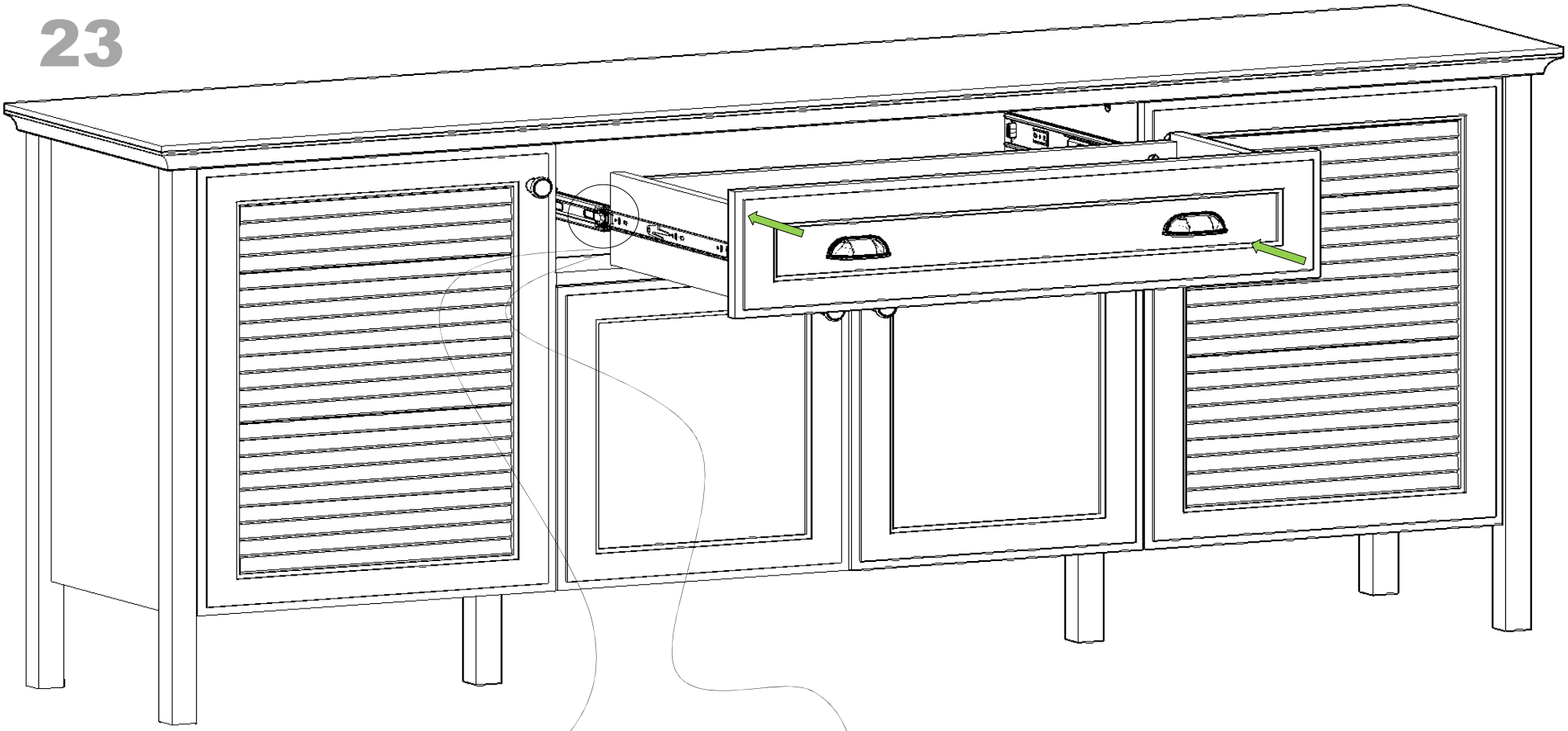

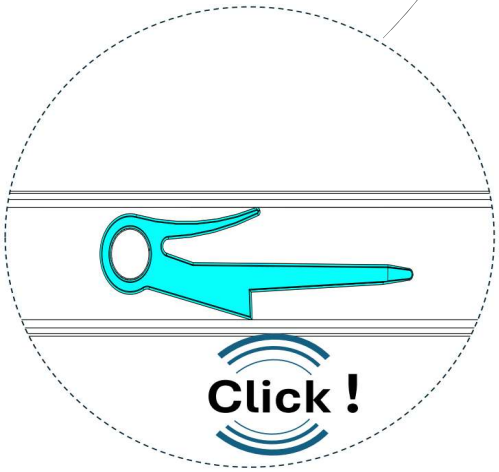

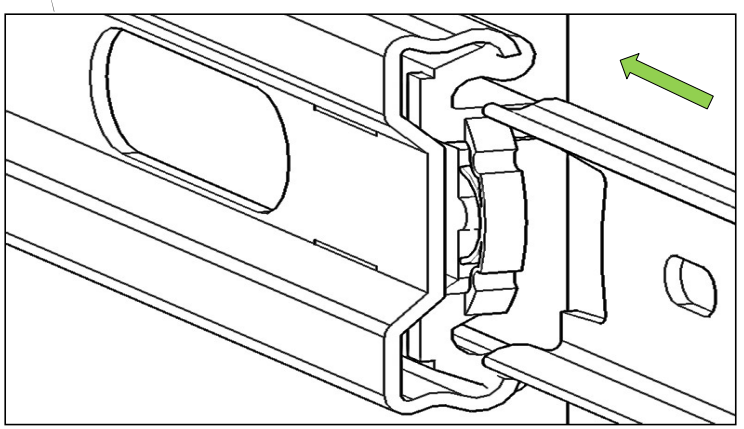

24

