ASSEMBLY INSTRUCTIONS

DRESSING TABLE

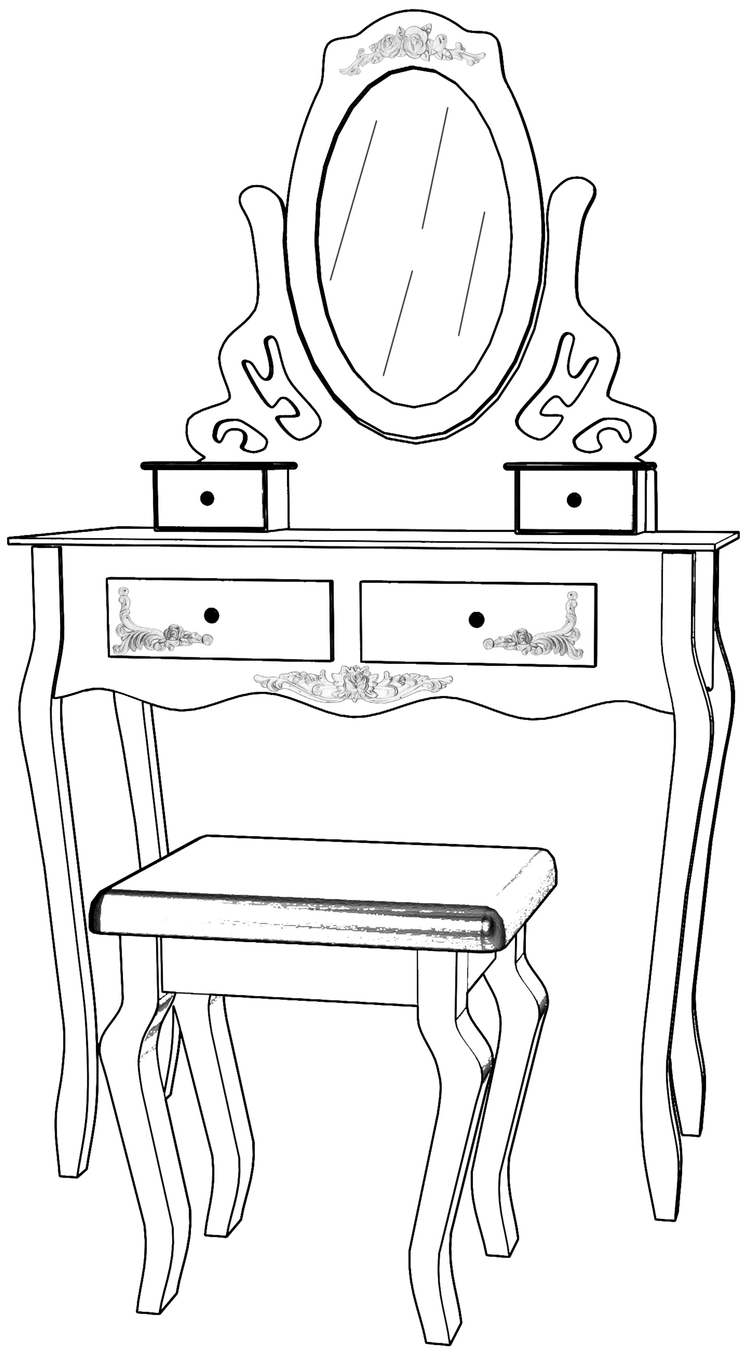

PART LIST

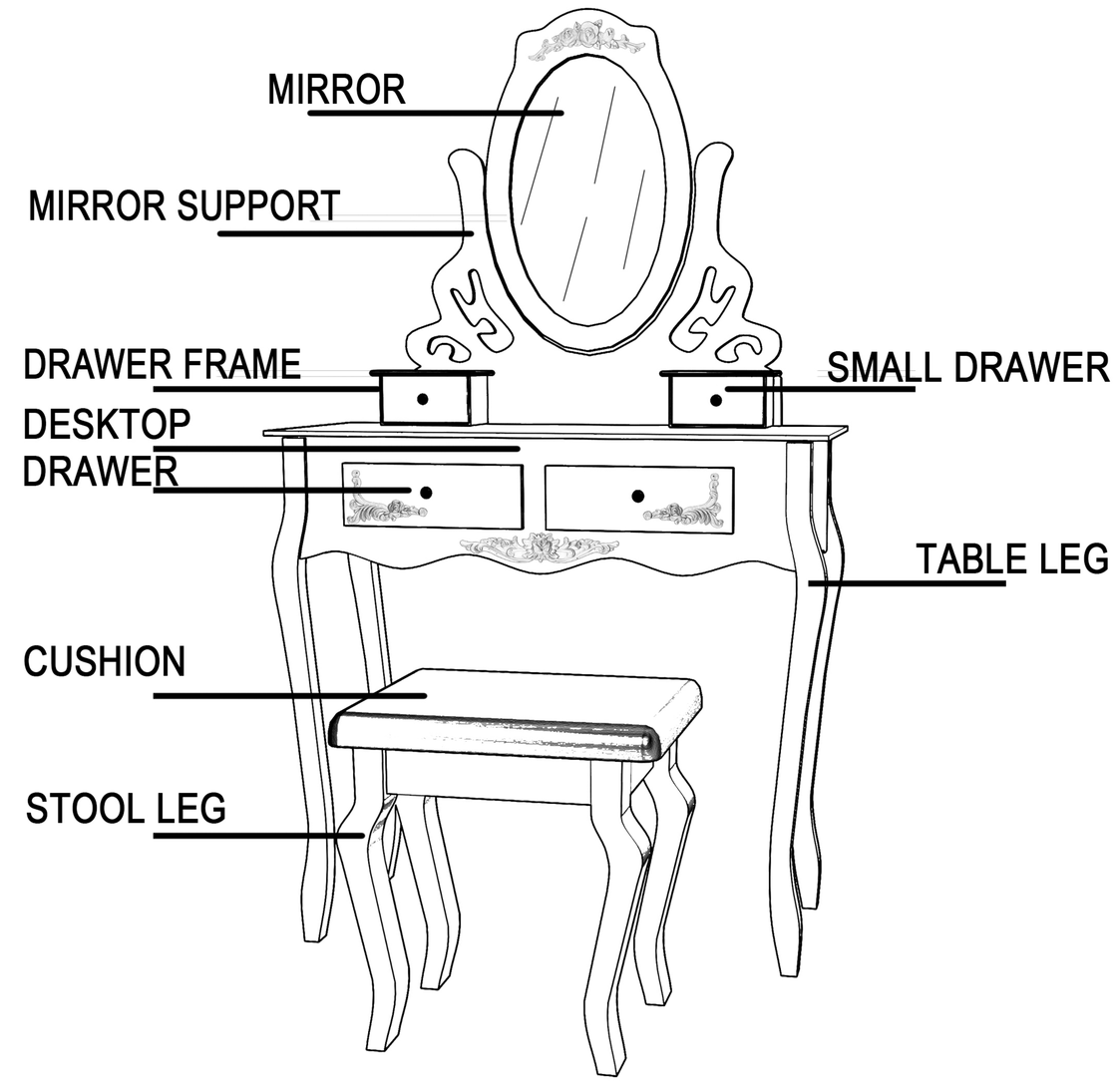

HARDWARE LIST

A M6X50MM X 16 PCS

B M4X30MM X 2 PCS

C M4X60MM X 2 PCS

D M4X20MM X 2 PCS

E ALLEN WRENCHX 1 PC

STEP 1

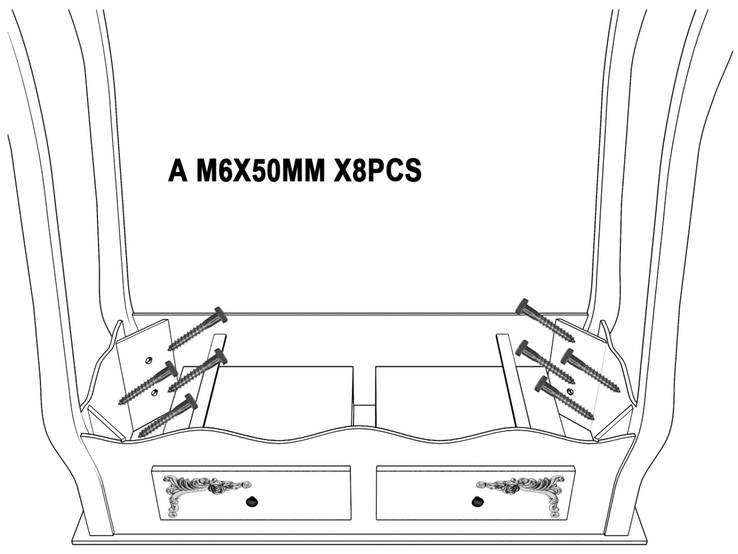

USE HARDWARE A(X8PCS) TO INSTALL THE LEGS ON THE DESKTOP.

STEP 2

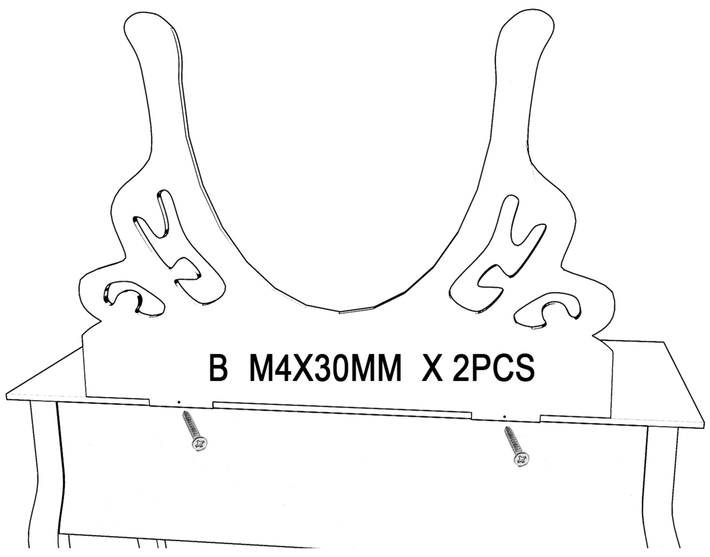

USE SCREW B(X2PCS) TO INSTALL THE MIRROR SUPPORT ON THE DESKTOP.

STEP 3

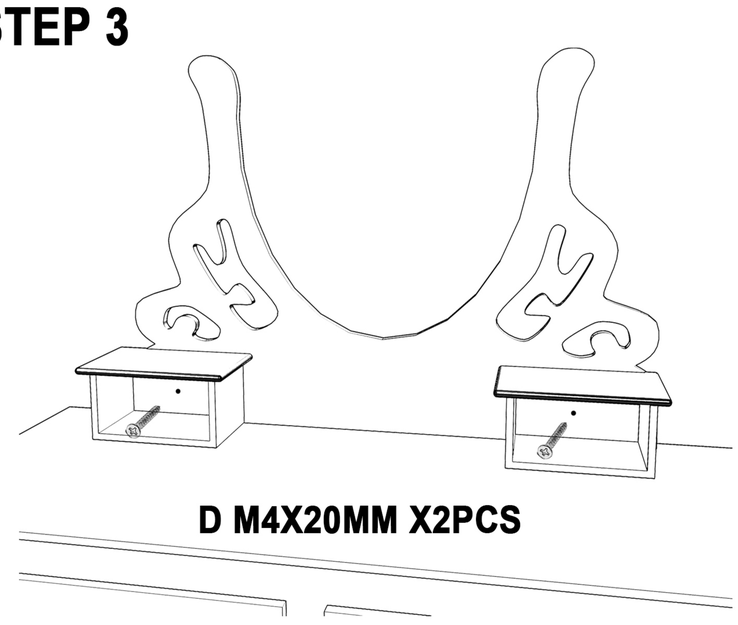

FIRST PULL OUT THE SMALL DRAWER FROM THE DRAWER FRAME, USE SCREW D(X2PCS) TO CONNECT THE DRAWER FRAME AND THE MIRROR SUPPORT TOGETHER, AND THEN REINSTALL THE SMALL DRAWER INTO THE DRAWER FRAME.

STEP 4

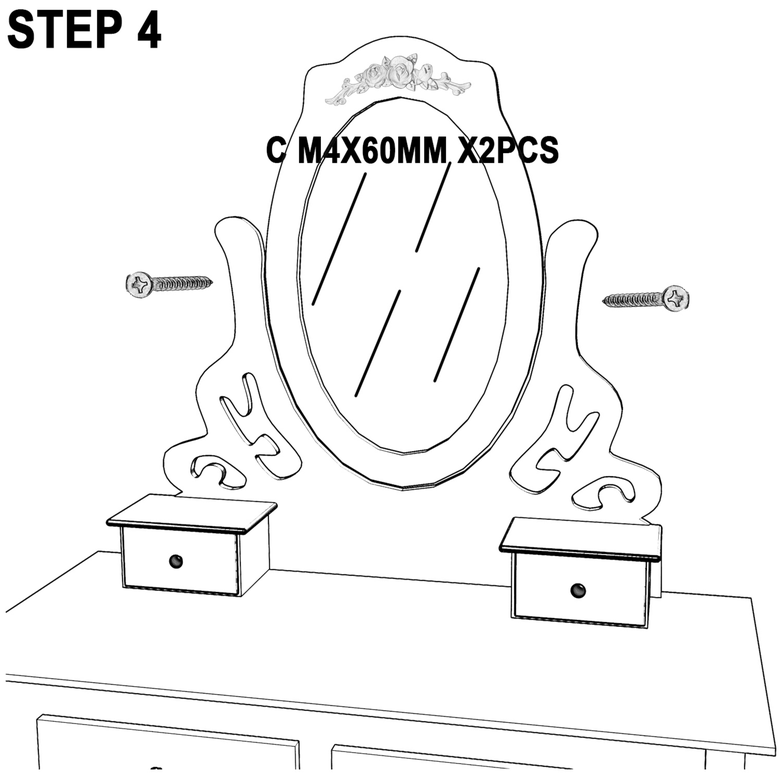

USE SCREW C(X2PCS) TO CONNECT THE MIRROR TO THE MIRROR SUPPORT.

STEP 5

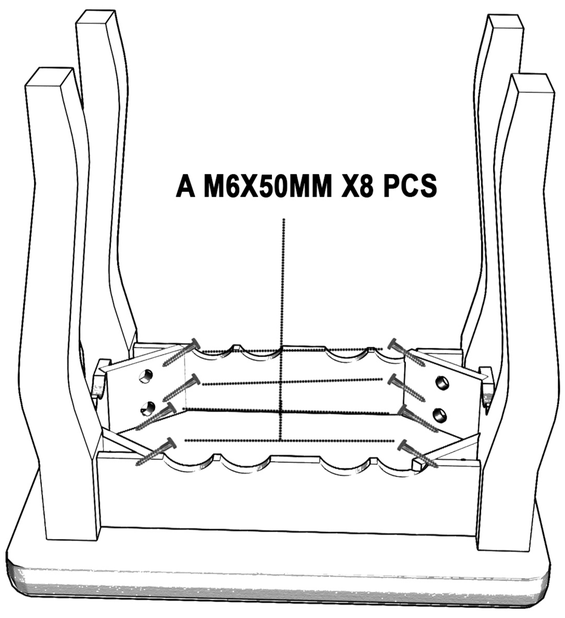

USE HARDWARE A(X8PCS) TO CONNECT STOOL LEGS AND CUSHION.
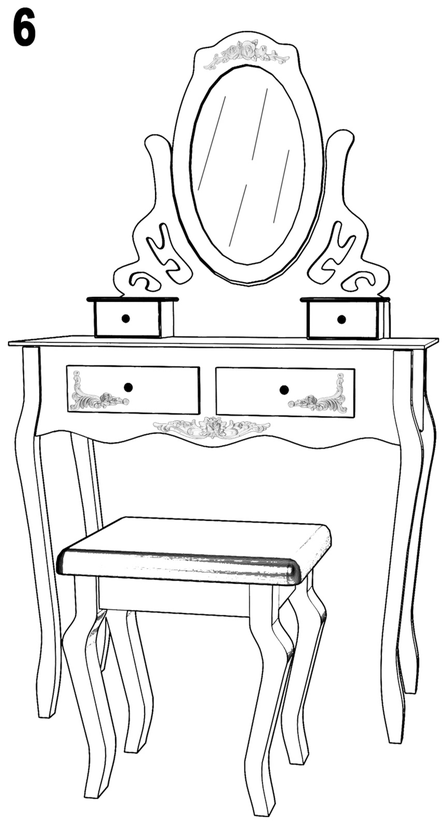
STEP 6