Product Size:

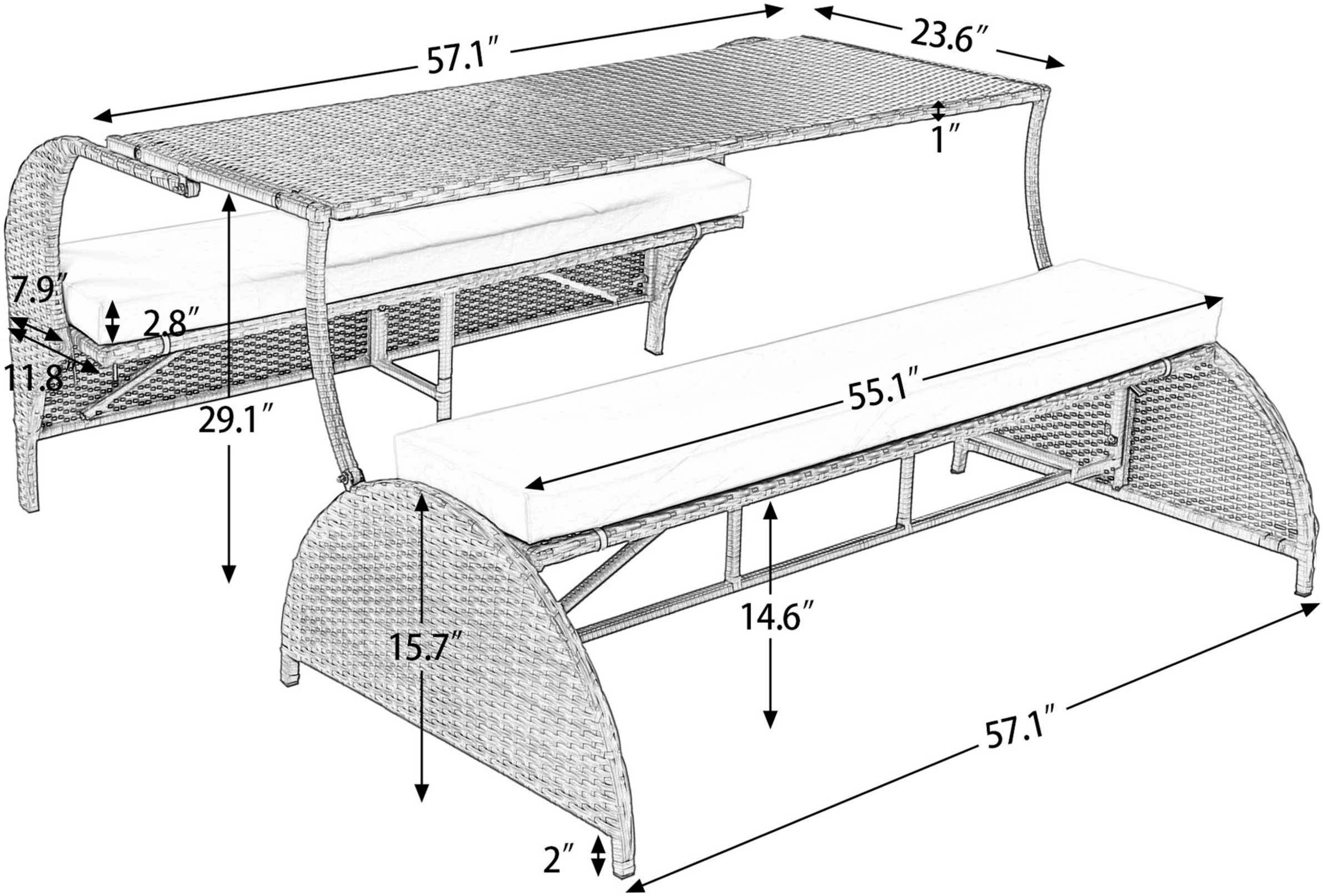

Product Size:

