Owner Manual

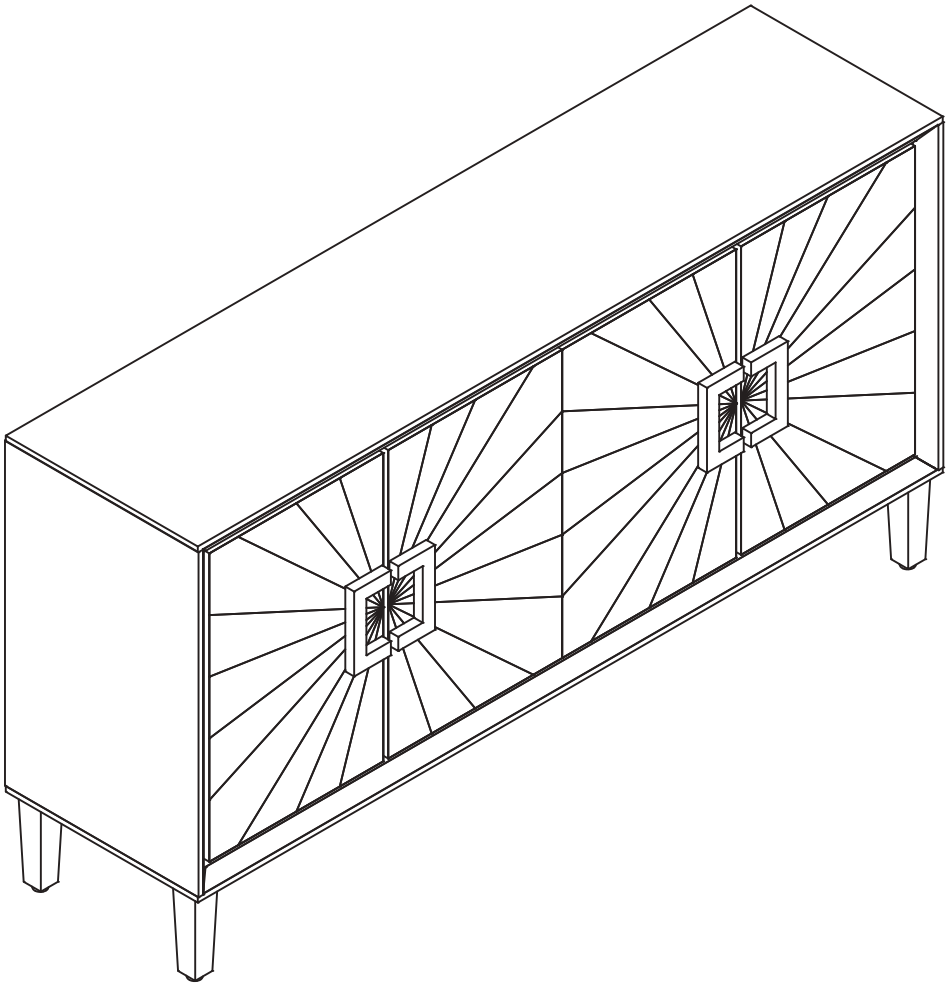

1. Thank you for choosing ***our products.***

2. Return Policy



DO NOT RETURN TO THE STORE! Skip the process of returning your product and contact us directly for a replacement

If you find that parts of your order are missing or damaged, we will gladly ship any needed replacement parts free of charge.

If your product's quality does not meet your expectations or you have found any sort of defect, please contact our customer service department and let us know the details of your order and any issues encountered, we will try our best to provide you with a solution. Feel free to also directly contact our manufacturer concerning needed replacement parts and they will be happy to help provide you with a solution or answer any questions you may have.

Recommendations Before Beginning Assembly

 • Read instructions, cover to cover

 • Have 2-4 adults on hand for assembly depending on product size

 • Do not assemble directly on flooring or carpet

 • Assemble on a clean non-marring surface (example: packing foam)

 • Save all packaging until finished

3. Assembly Notice:

- If you encounter any problems during assembly and find that you cannot continue, rest assured we will help you solve the situation as soon as possible. Simply keep all of the parts of the product stored in a safe place and contact us immediately so we may assist you further.
- Once you have opened your package, remove all inner hardware packages and take the parts out. One by one, Place the parts out neatly in front of you, then refer to the instructions to ensure no parts are missing. If any pieces are found missing, please carefully look in the box first, as the hardware packaging might have torn making the

hardware spill in the box.

- Some key parts of your product may be stored and hidden inside of other parts. Please open any zippered or hook & loop storage compartments to remove all parts. (example: cushions and legs being stored in the underside of a sofa)
- IMPORTANT: When setting up your product, DO NOT INSTALL THE SCREWS ALL THE WAY IN THE BEGINNING. Place each screw into their proper hole and use your hand to twist the screw halfway. Twist all the screws in halfway to ensure the holes will match up properly and the product is level on the ground. When everything seems fitted, then tighten the screws.
- When you have completed assembly, we suggest you have more than one person to assist you with lifting and placing the product.

Care & Maintenance



Do not put hot items directly on furniture surface



Do not clean furniture with harsh cleansers or polish



Do not place furniture under direct sunlight



Do not place furniture near heating or cooling vents



Do not write on furniture without a padded barrier to protect the surface



Do not place furniture outside. For indoor use only



Not for commercial use. For residential use only



Stains may be removed with mild soap solution and damp cloth



Children should not climb or jump on the furniture



Dust and pick-up spills using a clean, non-colored, lint-free cloth

Caution

● This product contains small components. Please ensure that they are kept away from small children.

● Do not use power tools to assemble your furniture. Power tools may strip or damage the parts.

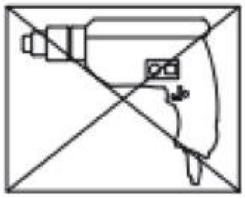

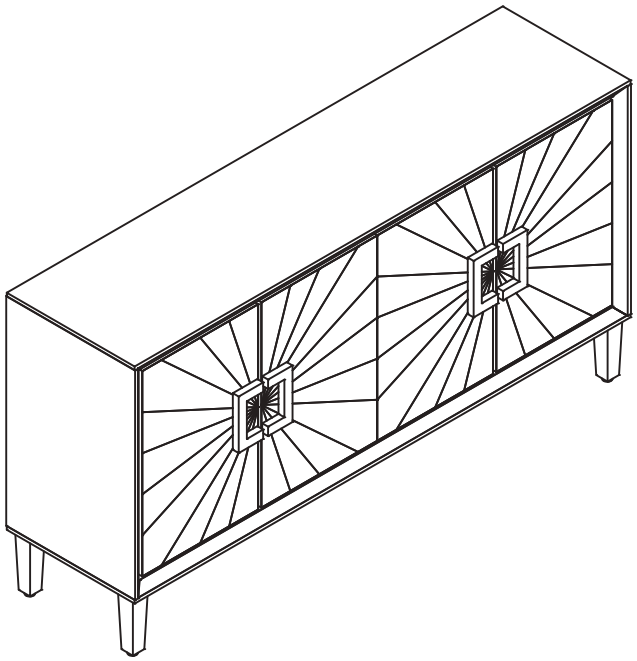

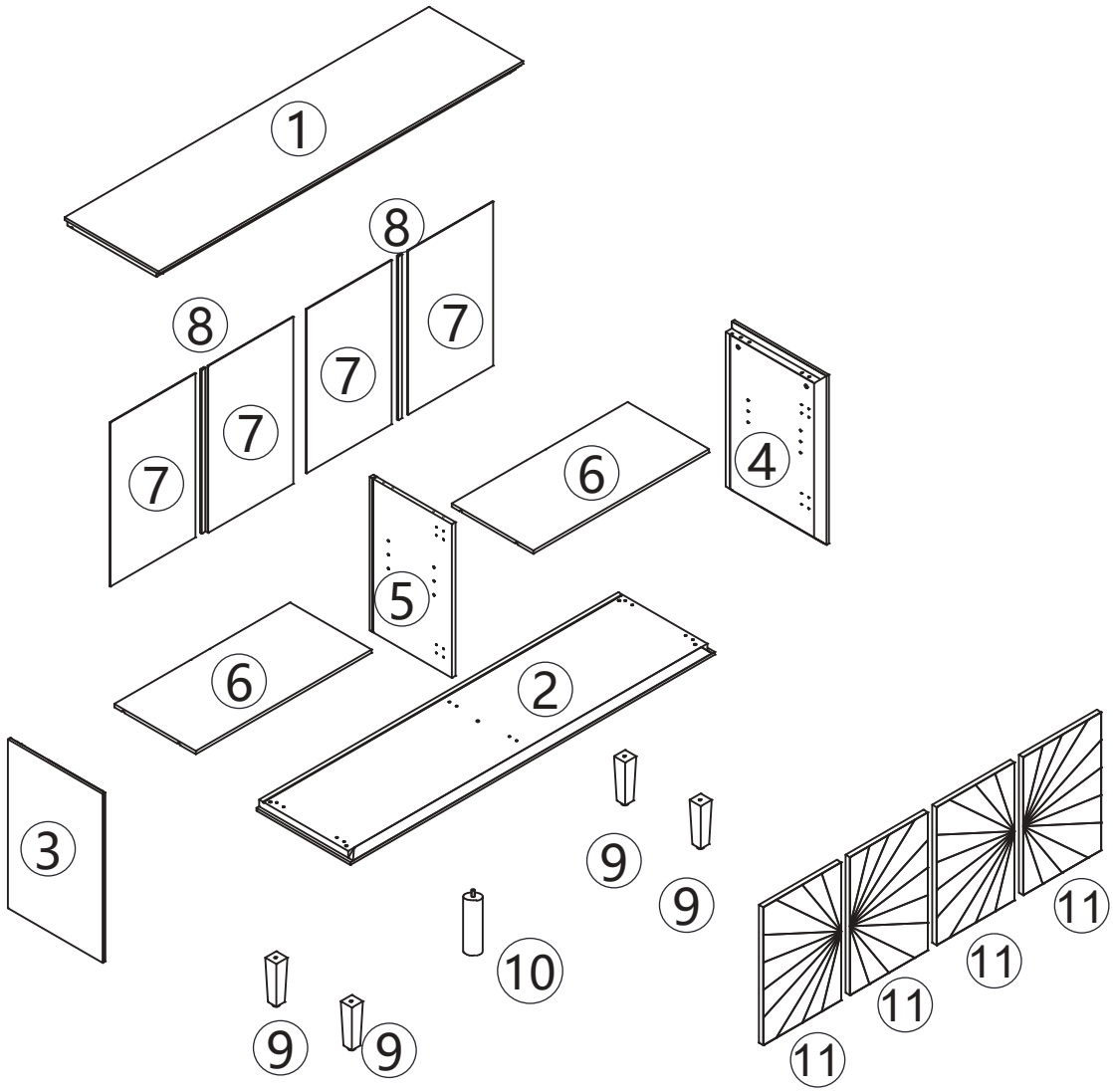
1
8
8
7
7
7
7
7
6
4
5
6
2
3
9
9
10
9
9
11
11
11
11

① 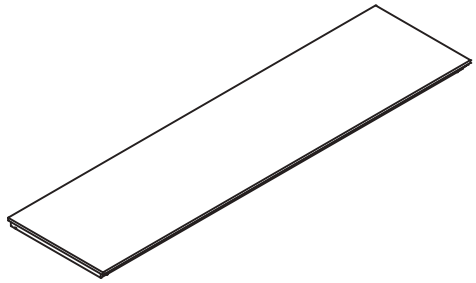 x1	② 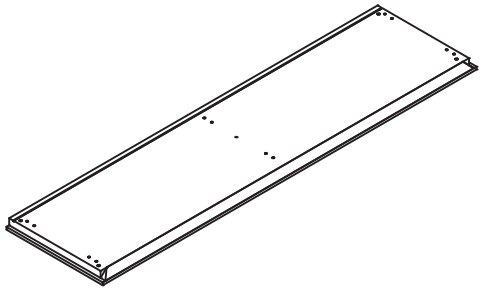 x1		
③ 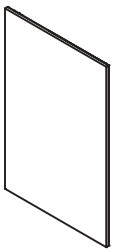 x1	④ 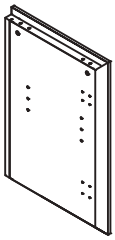 x1	⑤ 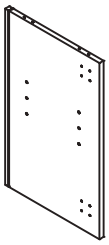 x1	⑥ 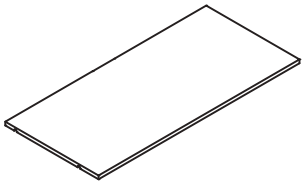 x2
⑦ 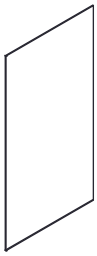 x4	⑧  x2	⑨  x4	⑩  x1
⑪ 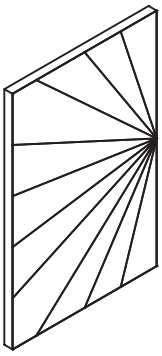 x4			

 Ø 6x35mm	 Ø 15x10mm	 Ø6x30mm	 Ø5x60mm	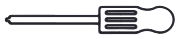
AX6	BX6	CX12	DX6	EX1
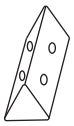	 Ø3x14mm		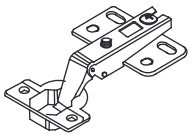	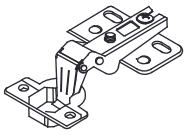
FX2	GX12	HX8	KX4	SX4
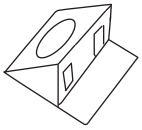	 Ø4x14mm	 P1 P2 P3 P4 P5	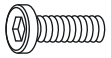 Ø8x50mm	
JX8	MX48	PX2		NX4
	 Ø6x30mm			
QX4	RX8	TX1	UX8	

STEP 1

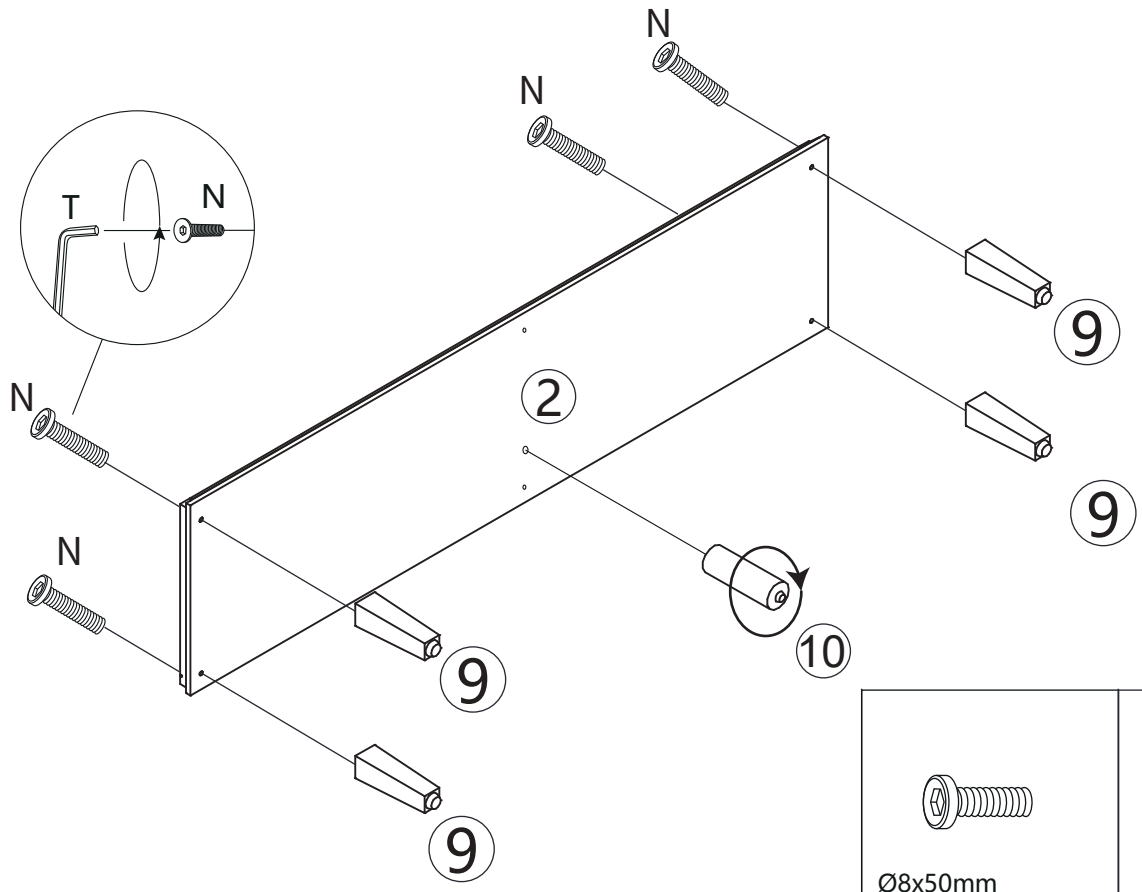

Ø8x50mm	
NX4	TX1

STEP 2

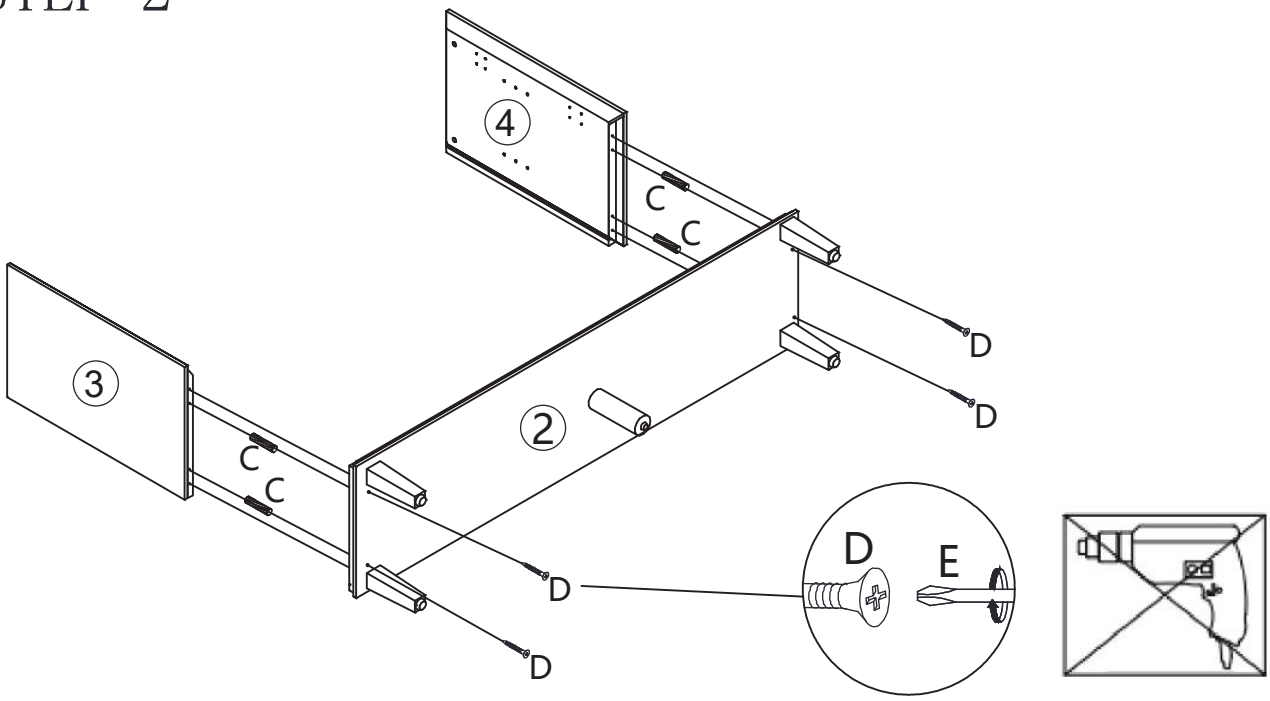

 Ø6x30mm	 Ø 5x60 mm	
CX4	DX 4	E X 1

STEP 3

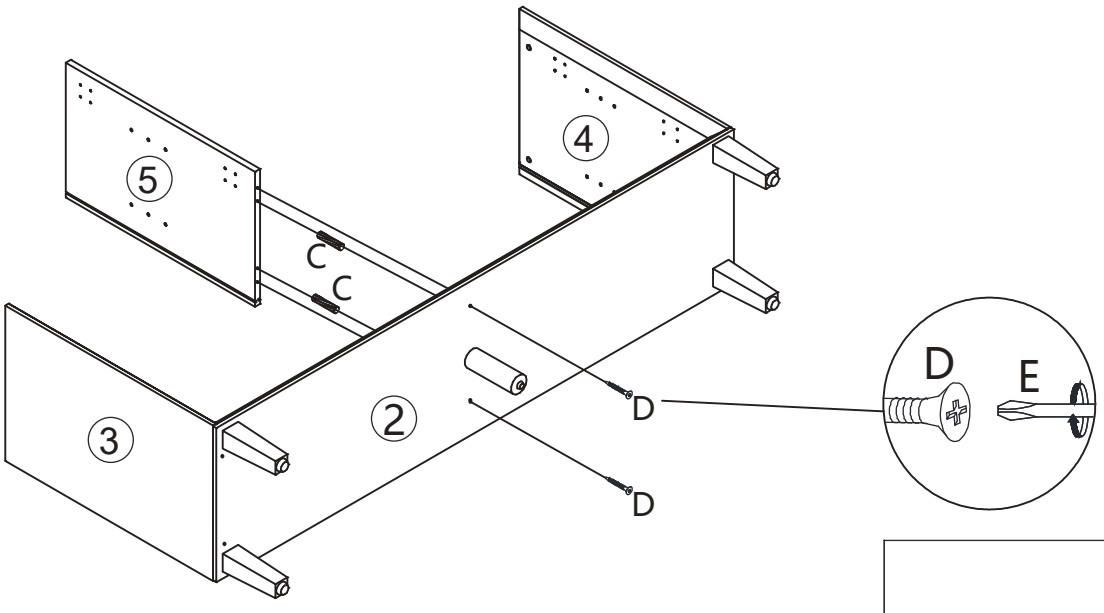

 Ø6x30mm	 Ø 5x60 mm
CX2	DX 2

STEP 4

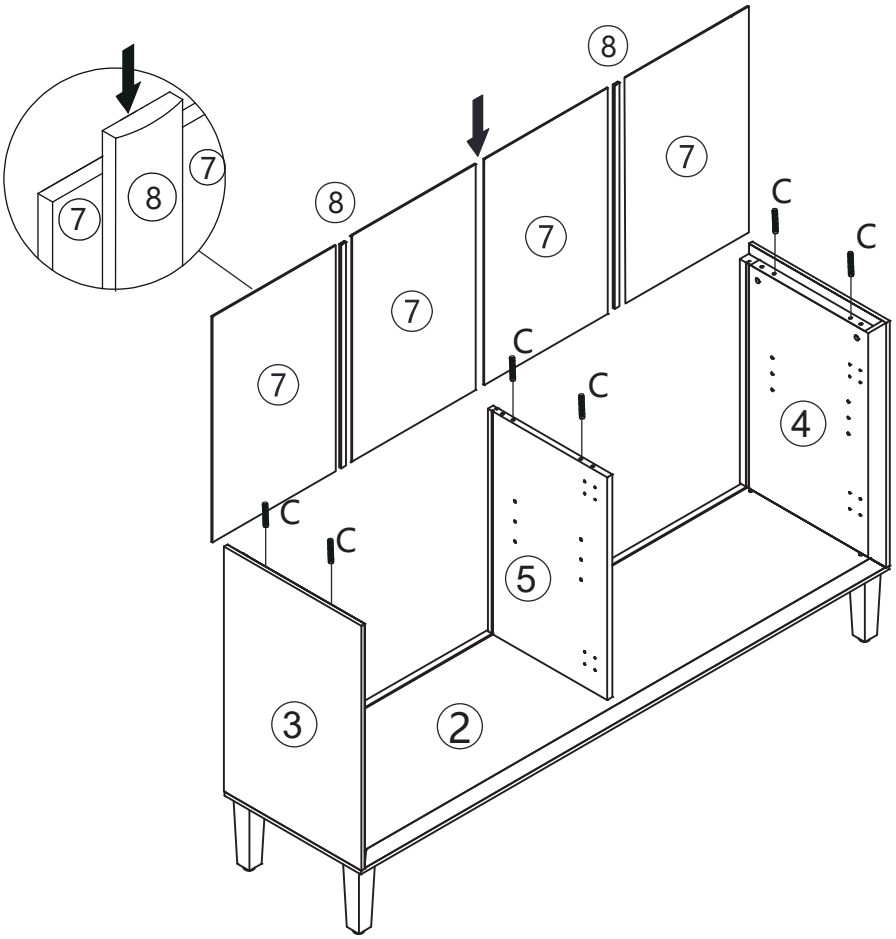

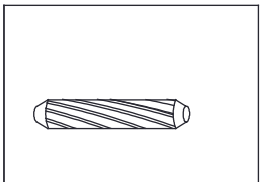

Ø6x30mm

CX6

STEP 5

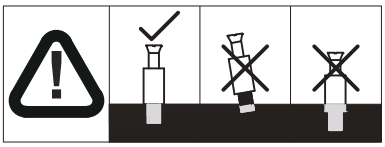

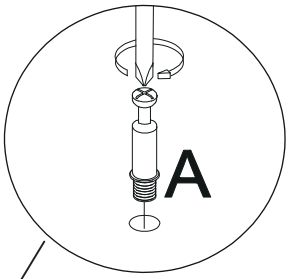

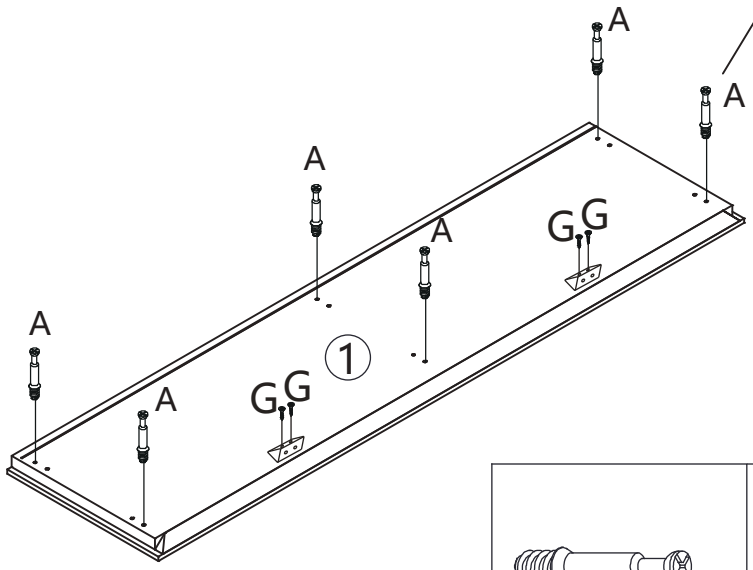

Ø6x35mm

AX6



Ø3x14mm

G X4

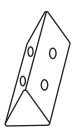

FX2

STEP 6

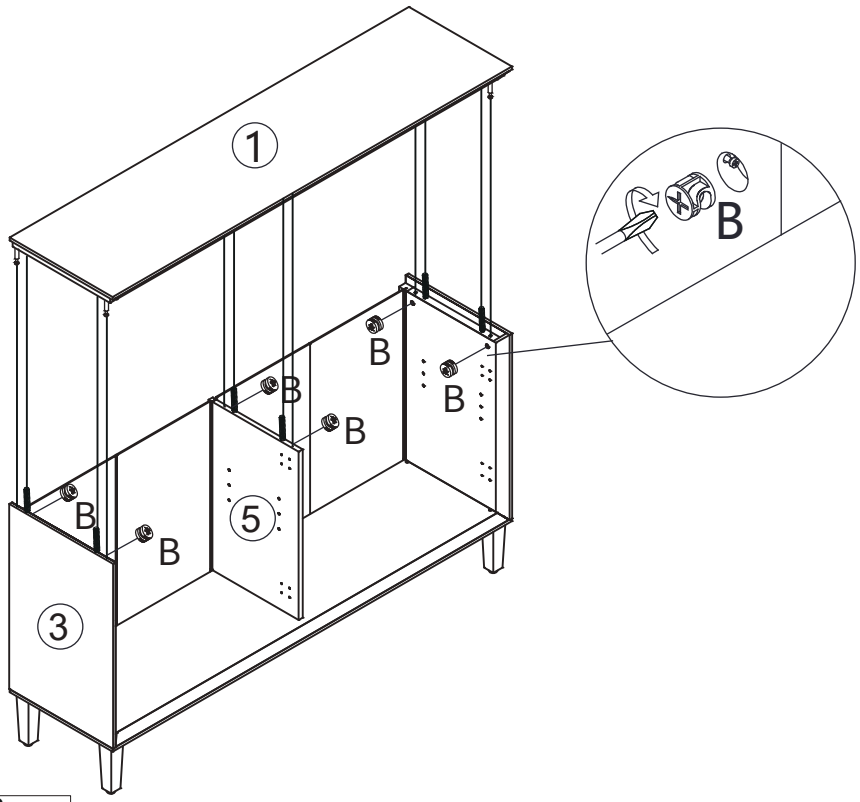

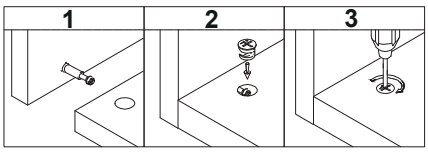



Ø 15x10mm

BX6

STEP 7

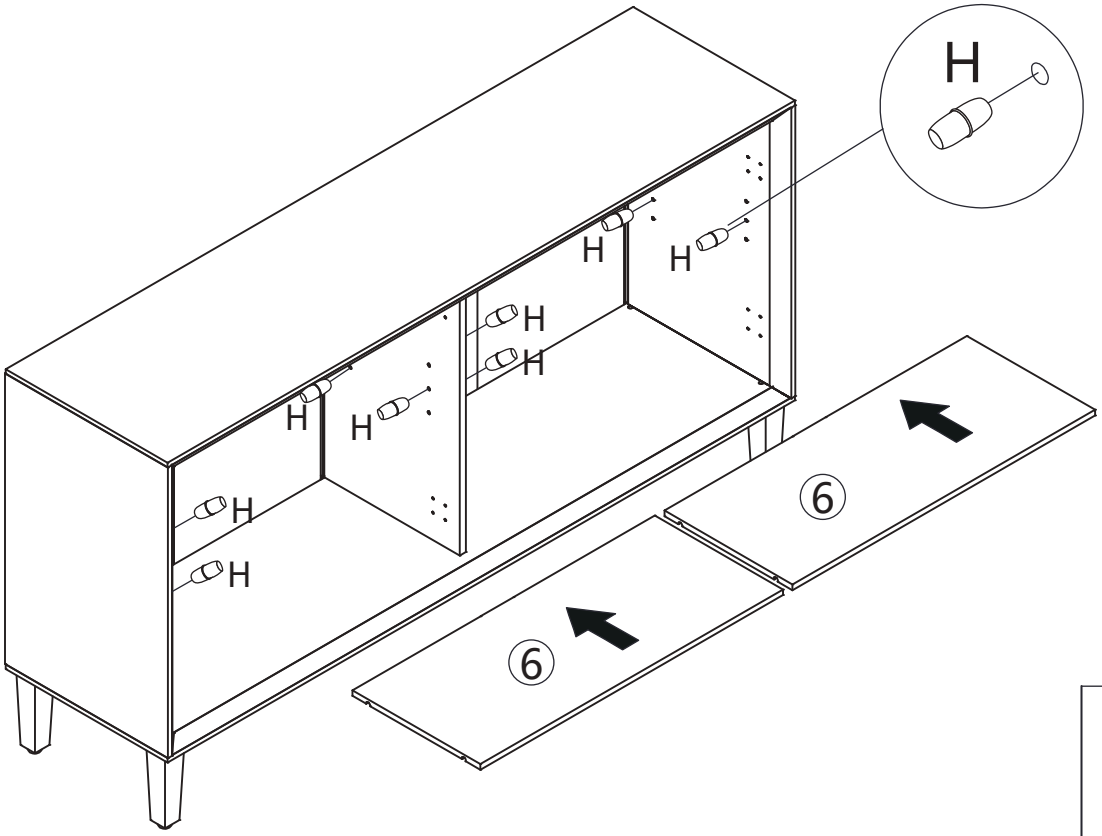

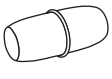

H X8

STEP 8

X2

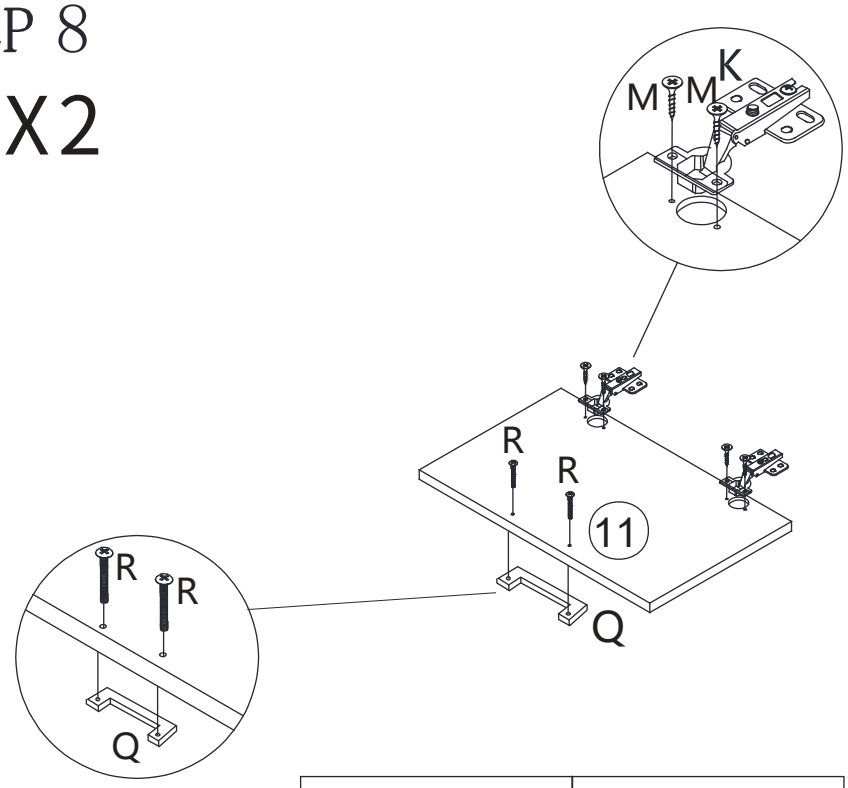

KX4	MX8	QX2	RX4
	Ø4x14mm		Ø6x30mm

STEP 9

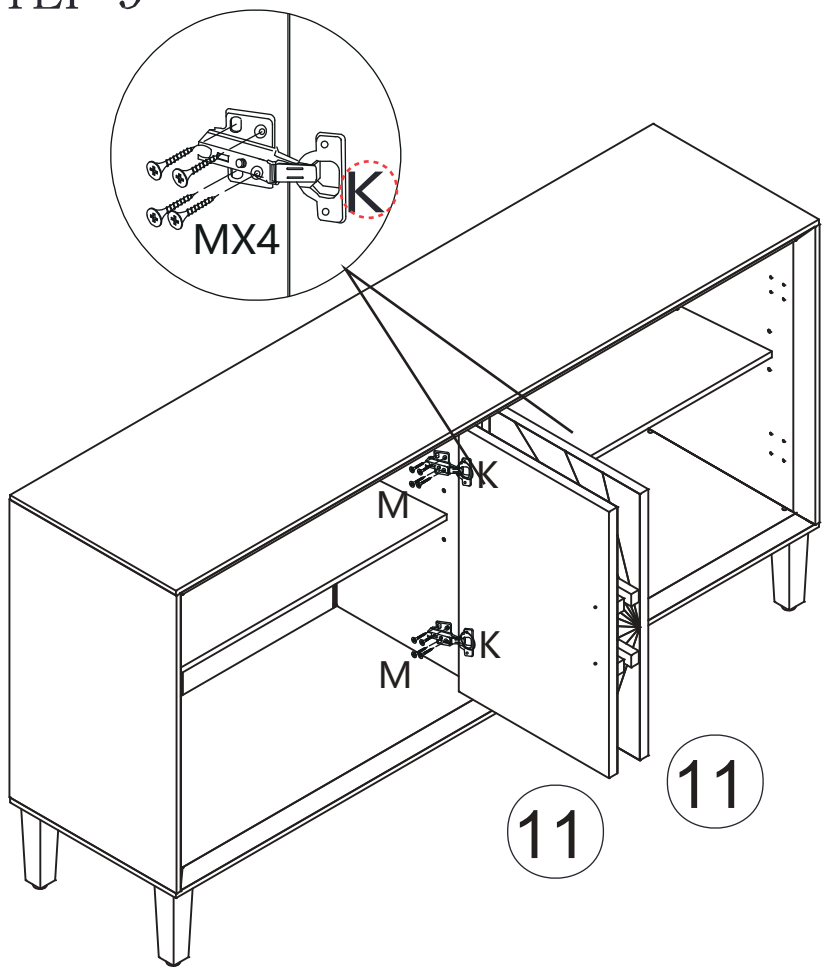

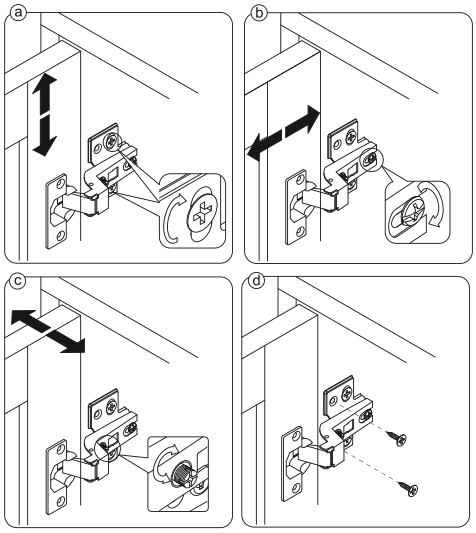

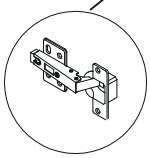

NOTE: If the doors are uneven or there is a gap in the middle, loosen or tighten the screw on the door hinge until they are sitting flush.

Ø4x14mm
MX16

STEP 10

X2

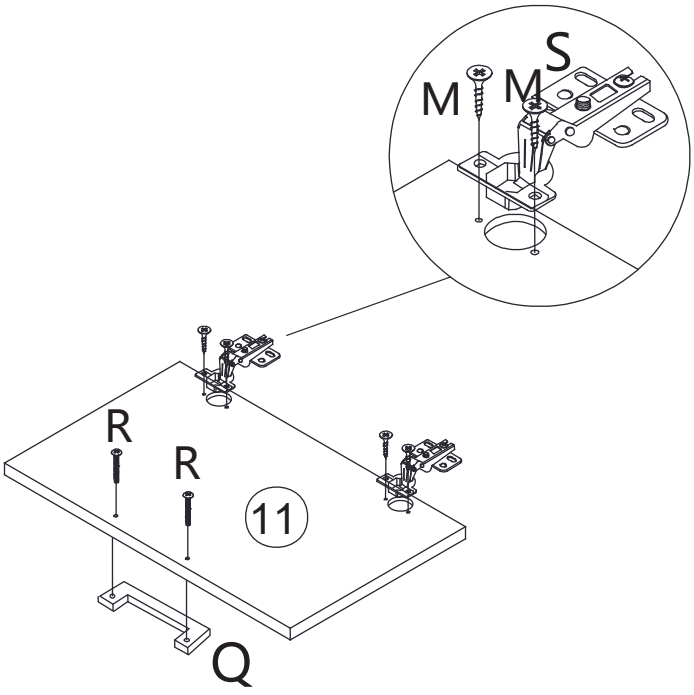

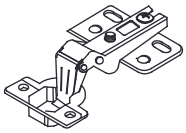	 Ø4x14mm		 Ø6x30mm
SX4	MX8	QX2	RX4

STEP 11

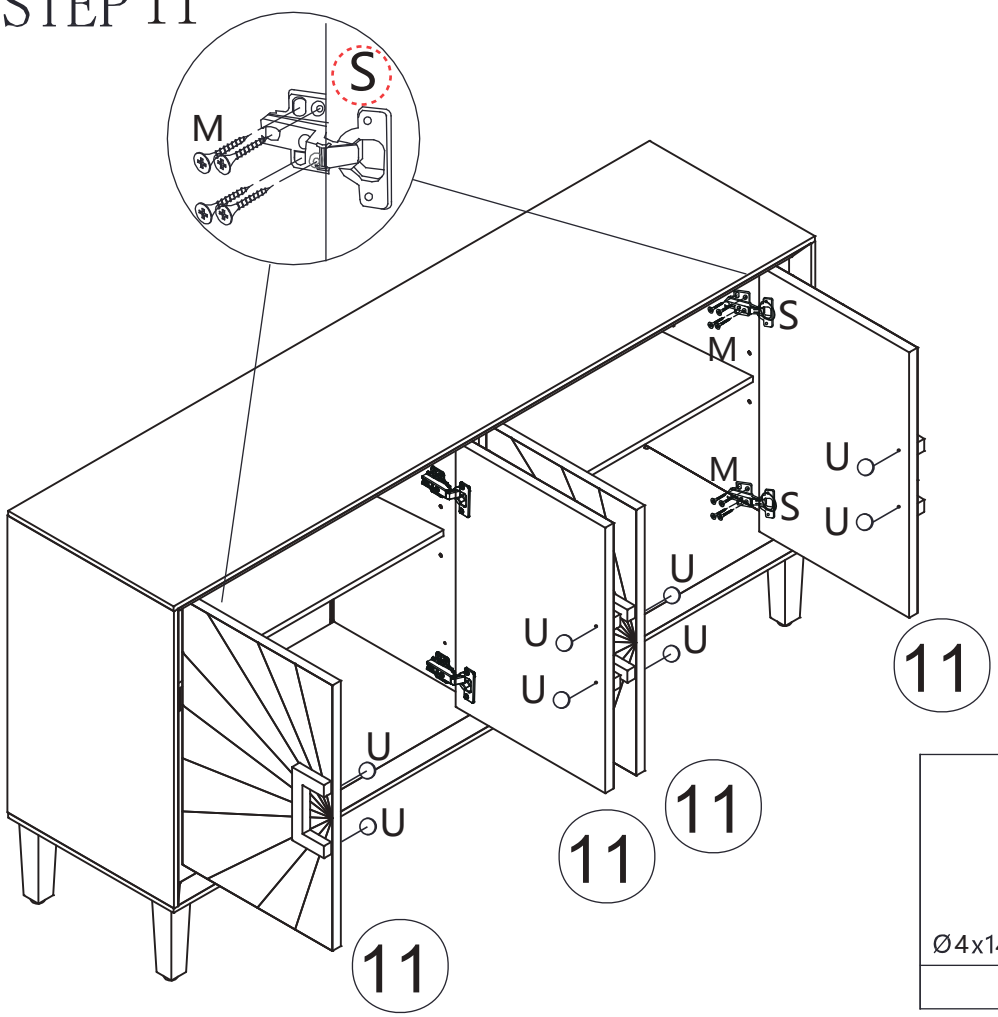

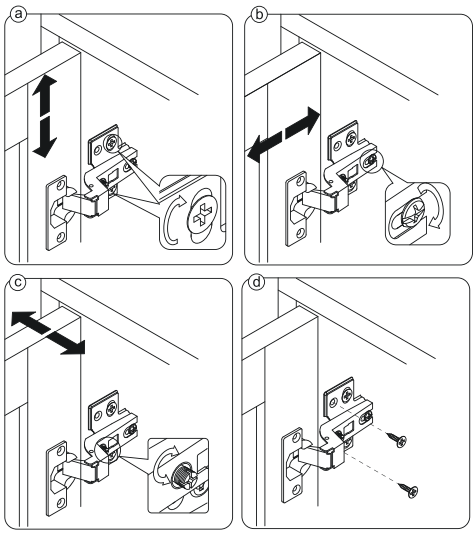

 Ø4x14mm	
MX16	UX8

STEP 12

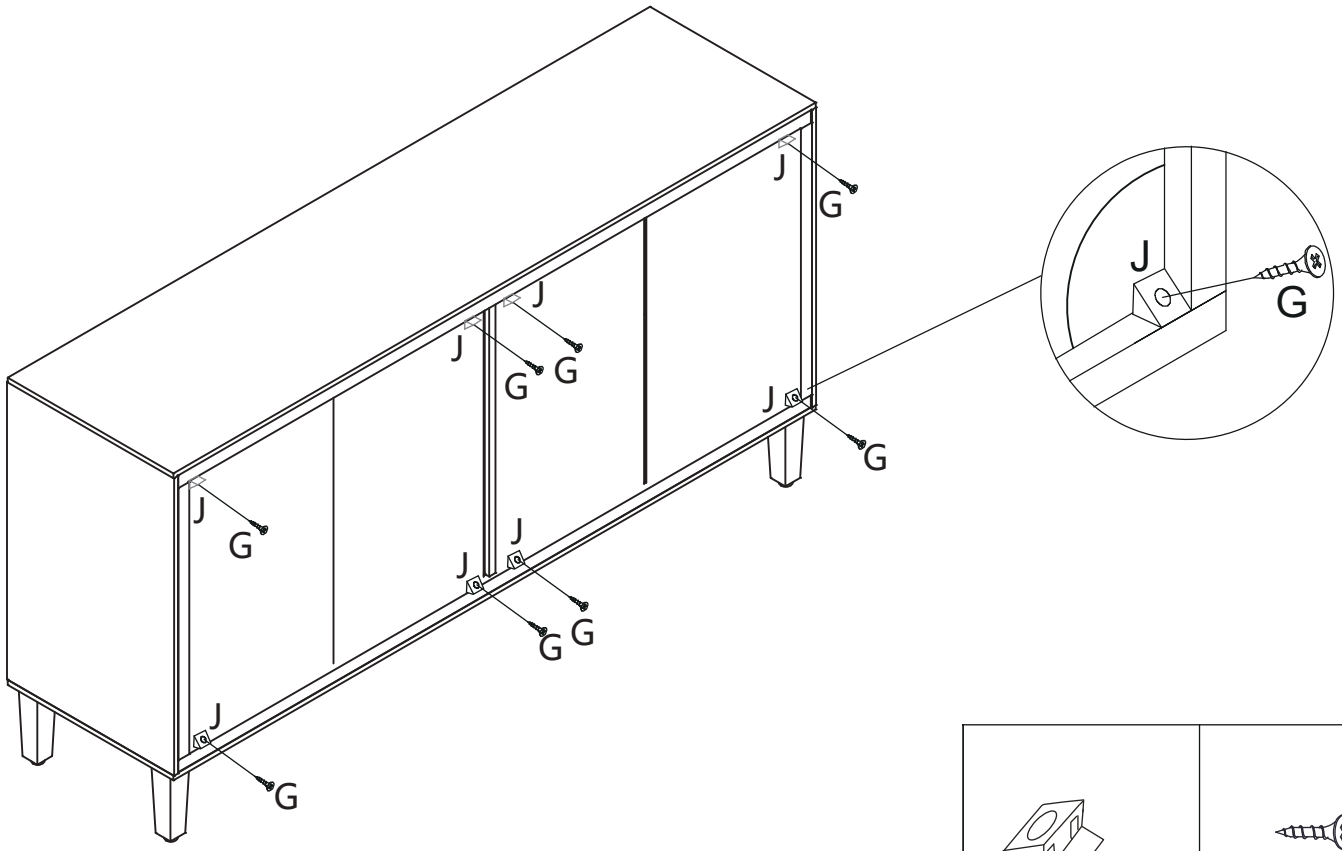

	Ø3x14mm
JX8	GX8

STEP 13

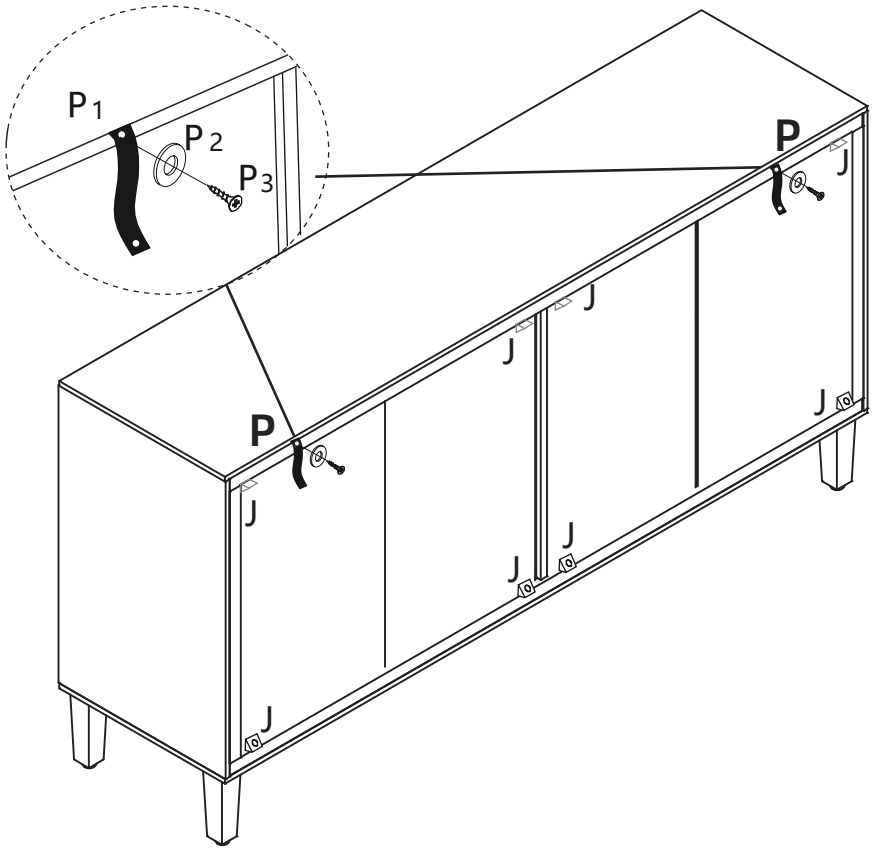

		
P1	P2	P3
P X2		

STEP 14

WALL

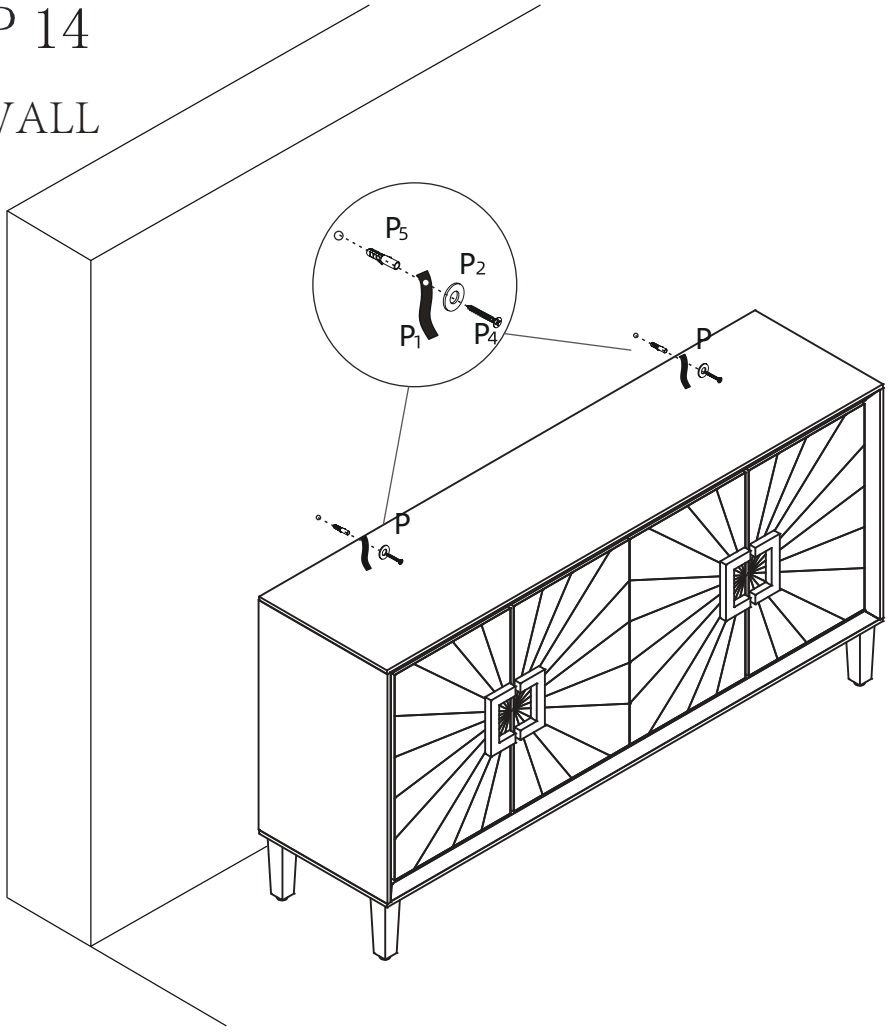

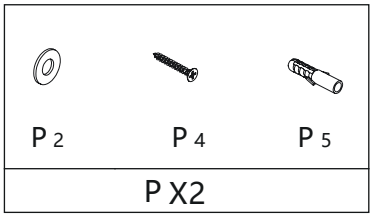

Assembly Steps(EN) / Montageschritte(DE)

HOW TO ADJUST THE HINGES TO ALIGN THE DOORS IF NEEDED.

STEP 1

Open the door.

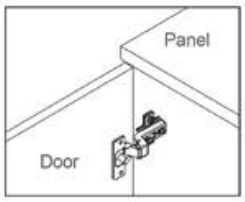

STEP 2

Adjust the door panelsupward or downward



Unscrew 2 screws in round holes loosen 2 screws in oval holes a bit.

Tighten 2 screws in oval holes. Screw in 2 screws in round holes

STEP 3

Adjust the flush between door panel and side panel



MOVE DOOR OUTWARD by turning this screw counter-clockwise

KEEP DOOR IN RIGHT POSITION

MOVE DOOR OUTWARD by turning this screw clockwise

STEP 4

Adjust the Gap beteen door panel and side panel

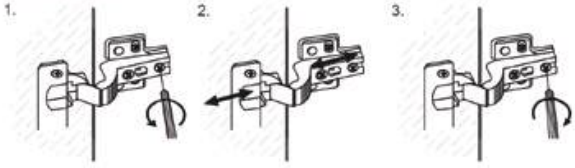

Loosen this screw a bit.

MOVE DOOR BACK OR FORTH

Re-tighten this screw.