Ameriwood HOME

MODEL NUMBER
9445306COM
ASSEMBLY

UNIT DESCRIPTION
Side Storage Cabinet

ASSEMBLED DIMENSIONS (H X W X D)
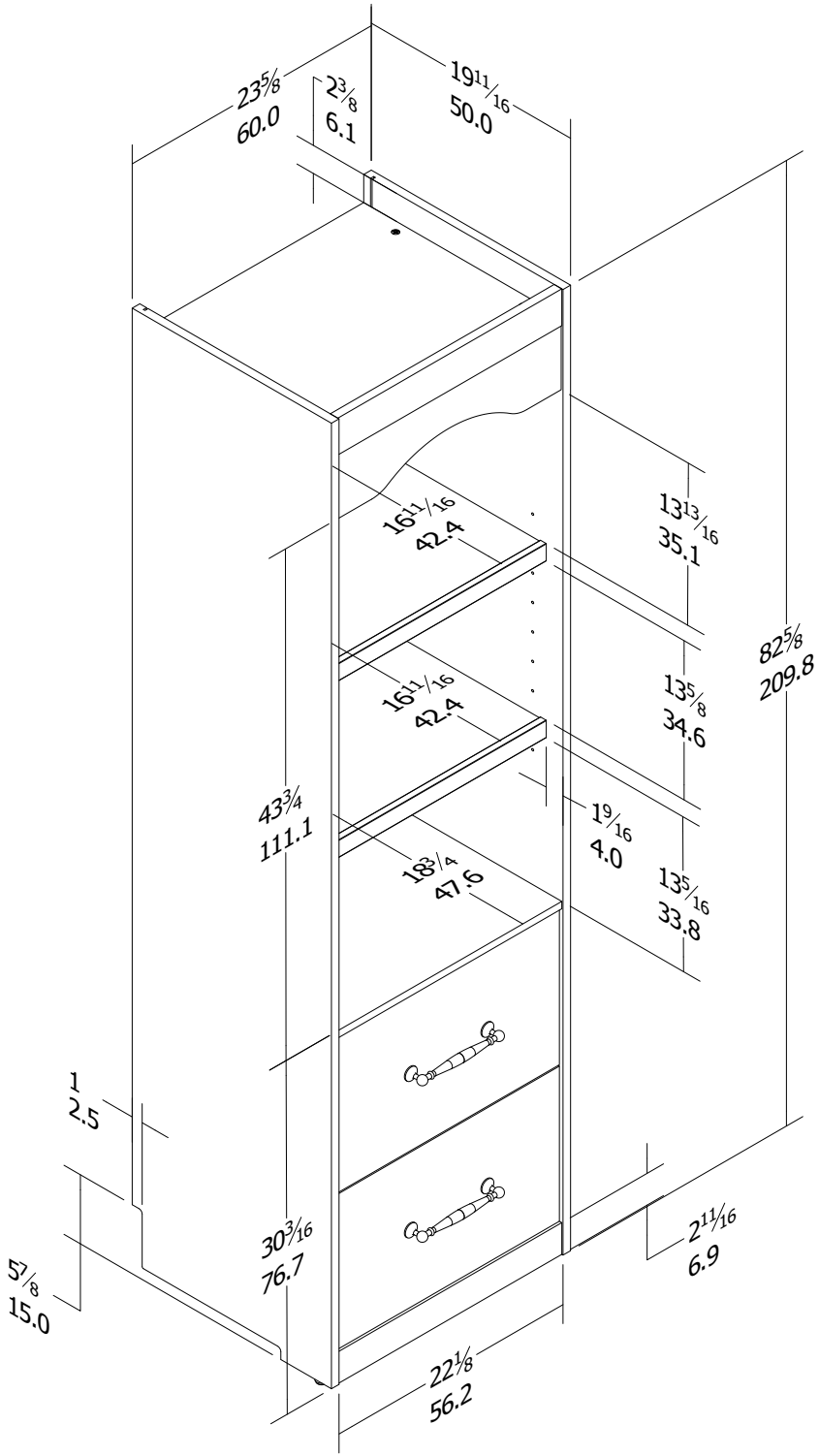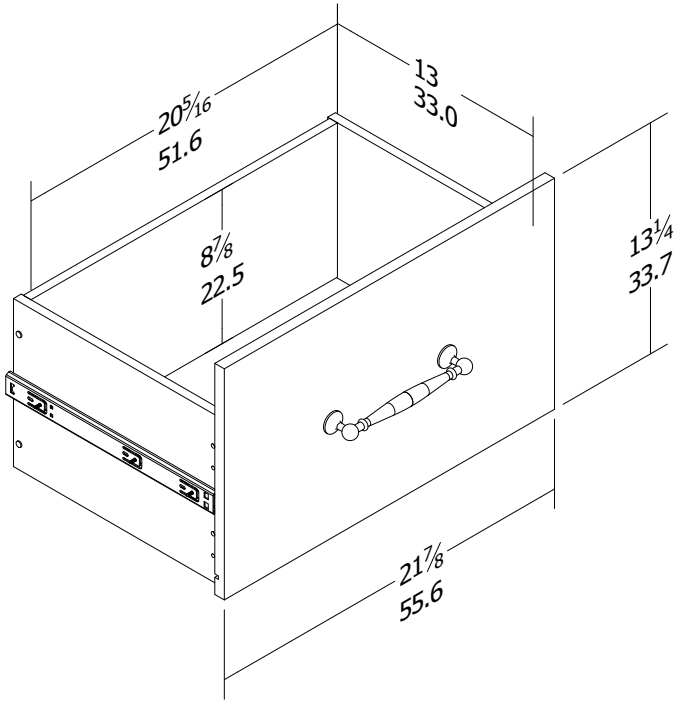
82-5/8 in. H x 23-5/8 in. W x 19-11/16 in. D
209.8 cm H x 60.0 cm W x 50.0 cm D