ELECTRIC RIDE ON CAR

Owner's Manual



Note: Manual illustrations are for demonstration purposes only. Illustrations may not be the same as the exact appearance of the actual product.

Read and understand this entire manual before allowing children to use this product. Please keep the 17-character order ID with your side before contacting us.

Order ID: _____ - _____-_____.

For assistance, please send Email to:

acetoy.service@gmail.com

Table of Contents

1. About Your New Vehicle 1
2. Warning 2
3. Parts List 3
4. Parts Diagram 4
5. Installation Steps 5
6. Dashboard Introduction 12
7. Music Panel Introduction 13
8. Charging Indication 14
9. Troubleshooting Guide 16
10. Maintaining 19
11. Battery Fuse 20
12. Disposal of Battery 20
13. Warranty 21

Please read this manual carefully before installation in order to avoid operating errors or damages.
The owner's manual contains important safety information as well as assembly, use, and maintenance instructions. Please save it for future use.
The Ride-on Car must be assembled by an adult who has read and understood the instructions in this manual.

Specifications

Battery	12V 7Ah*2
Charger	24V 1000mA
Input	AC 100-240V
Suitable age	3+ years old
Load capacity	Under 150 lbs
Speed	1.9–5.0 mph
Product size	48.8 × 30.7 × 34.7 inches
Runtime	1-2 hours
Charge time	8-12 hours (Not exceed 20 hours)

Warning

1. Not suitable for children under 36 months.
2. This product contains small parts. Must be assembled by an adult. Keep children away from scattered screws, spilled pins, and other sharp or hazardous parts.
3. To reduce the risk of injury, children should drive under the supervision of adults.
4. Never use in traffic, near motor vehicles, on or near steep inclines, steps, swimming pools, or other bodies of water. Always keep children within safe riding areas.
5. Operate the vehicle only in the daytime or a well-lit area.
6. The power supply or battery charger used with this electric toy must be regularly examined for damage to the supply cord, plug, enclosure, or other parts. In the event of damage, it must be used until the damage has been repaired.
7. Use only the battery and charger specified by the manufacturer.
8. To prolong battery life, fully charge the battery before each use. Charging must be performed by an adult.
9. It is prohibited to change the circuit or add other electrical parts.
10. Make sure children know and follow these rules for safe driving and riding: wear shoes, always sit in the seat and fasten the seatbelt while riding. Appropriate protective equipment should be worn if necessary.
11. Do not tow anything behind the vehicle or overload it. The maximum user weight is 154 lbs; never allow more than 1 rider.
12. This toy is not equipped with a brake. To stop the vehicle, release the foot pedal.

Parts List

1 Vehicle body
x1



2 Backrest
x1



3 Wheel
x4



4 Steering rod
x1



5 Rear axle
x1



6 Front axle
x1

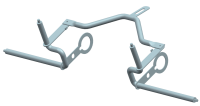

7 Handle bar
x1

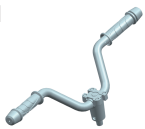

8 Hubcap
x4



9 Front bumper
x1



10 Front Gear box
x2

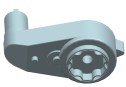

11 Dashboard part
x1

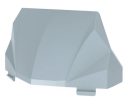

12 Shock Absorber
x2

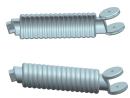

13 Plum blossom part
x4

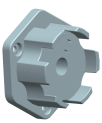

14 M4x16 Screw
x28



15 M6*35 Bolt
x1

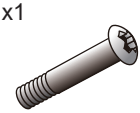

16 M6 Lock Nut
x1

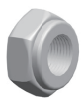

17 M8 Socket Wrench
x2



18 M10 Socket Wrench
x2



19 M16 Washer
x1



20 Cotter Pin
x1



21 Charger
x1

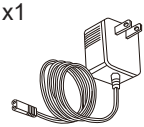

22 Manual
x1



Parts Diagram

If you experience a problem with this product or are missing a part, please first contact **acetoy.service@gmail.com**, rather than return this product to the store directly. Please identify all parts before assembly and save all packaging material until assembly is complete to ensure that no parts are discarded.

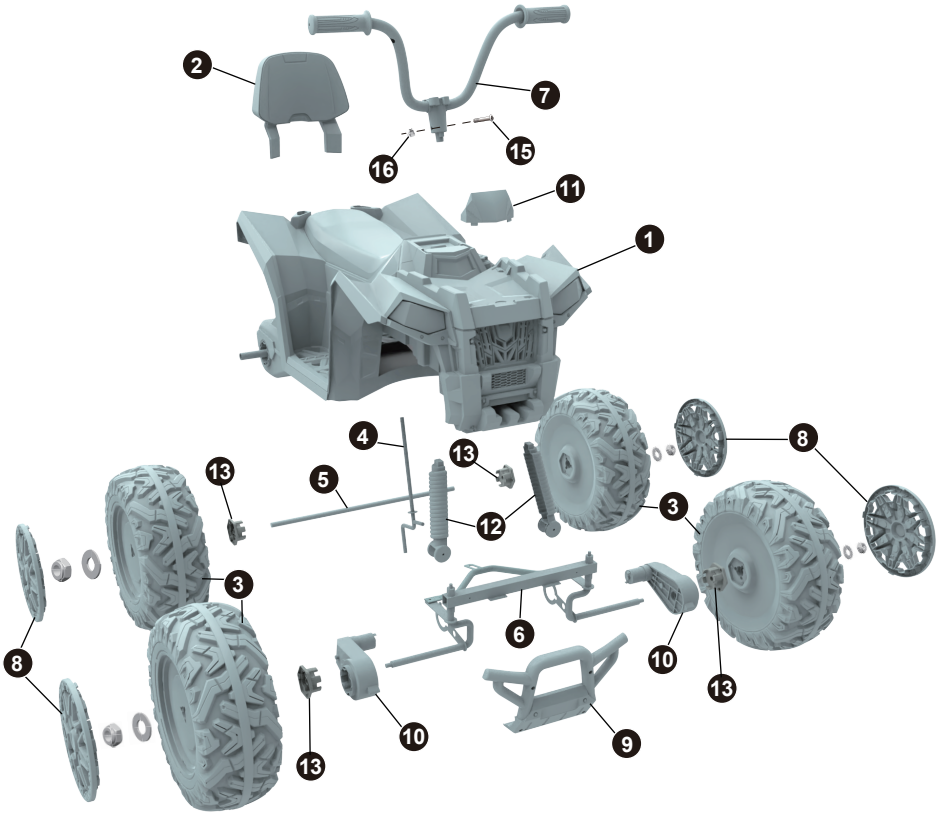

Note: Some parts have been pre-installed in the car body. Please remove and reinstall them before assembly.

Shock Absorber

1. Use a knife or scissors to cut off the cable tie at the rear of the car body, separating the upper and lower parts.
2. Use the provided plastic wrench to remove the washer and lock nut from the support shaft.
3. Align the holes on the shock absorber and support shaft, then insert the washer and secure it with the lock nut.

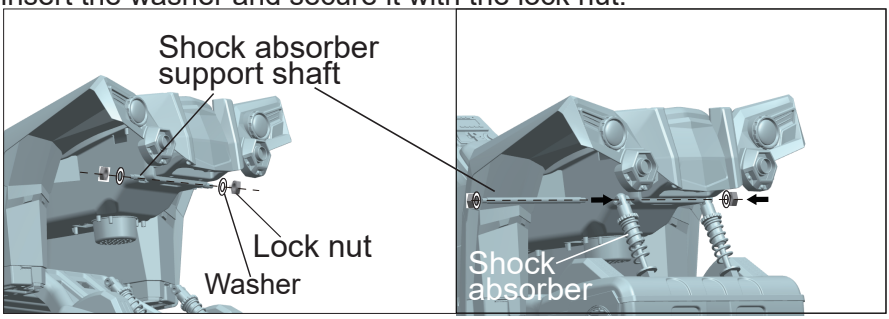

Rear Axle Assembly

1. Use a knife or scissors to cut off the cable ties on the shock absorber.
2. Remove the nuts and washers from the rear axle and insert the rear axle, making sure both rear wheels have equal clearance on each side.

NOTE: Keep the nuts and washers for later use.

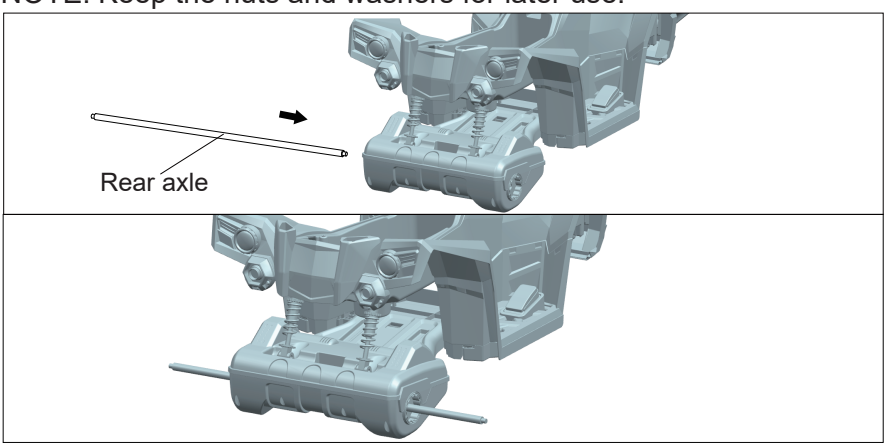

Shock Absorber Assembly

1. Align the two shock absorber with the holes on the front axle frame.
2. Secure each absorber with 4 screws.

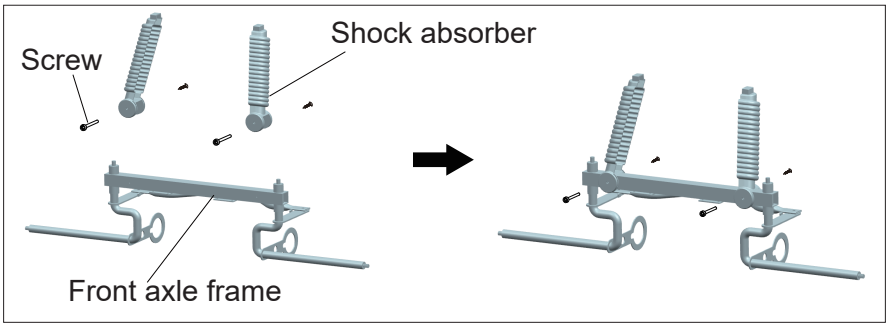

Steering Rod Assembly

Turn the car body upside down and insert the steering rod into the corresponding holes in the car body.

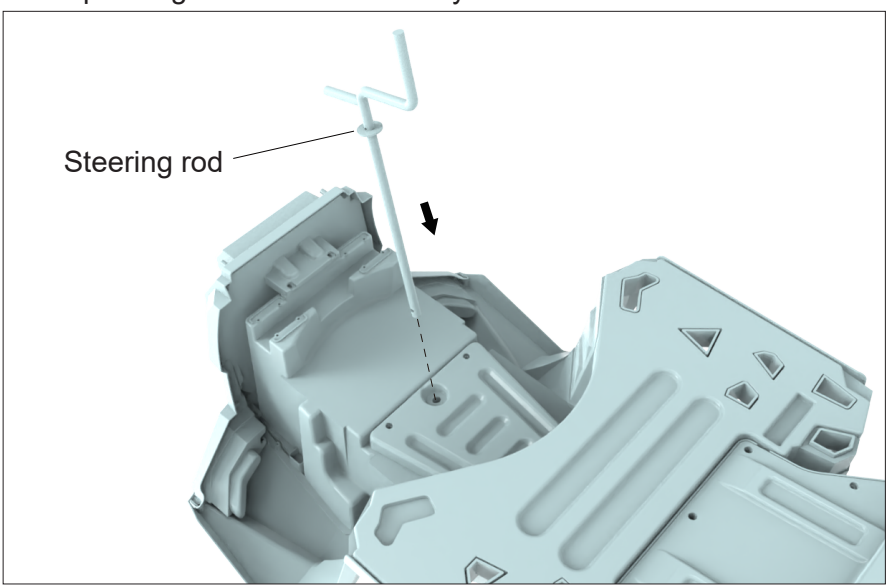

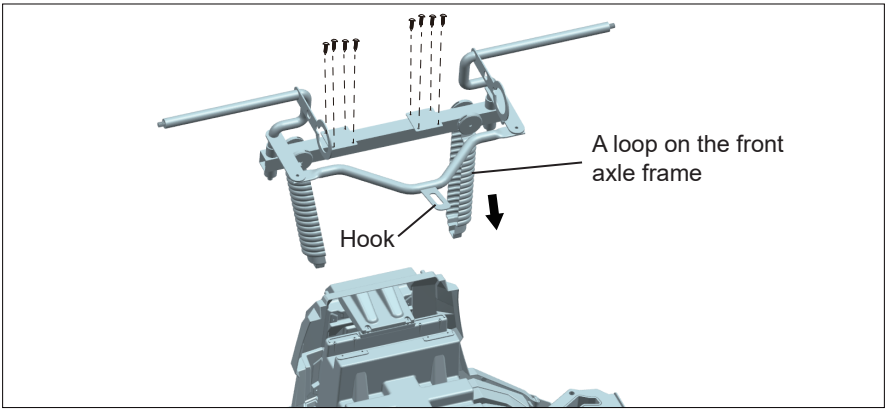

Front Axle Frame Assembly

1. Attach the front axle with the shock absorber to the car.
2. Insert the end of the steering rod into the hook of the front axle.
3. Secure the front axle frame with 4 screws on each side.
4. Place the washer onto the steering rod and secure it with the provided cotter pin.

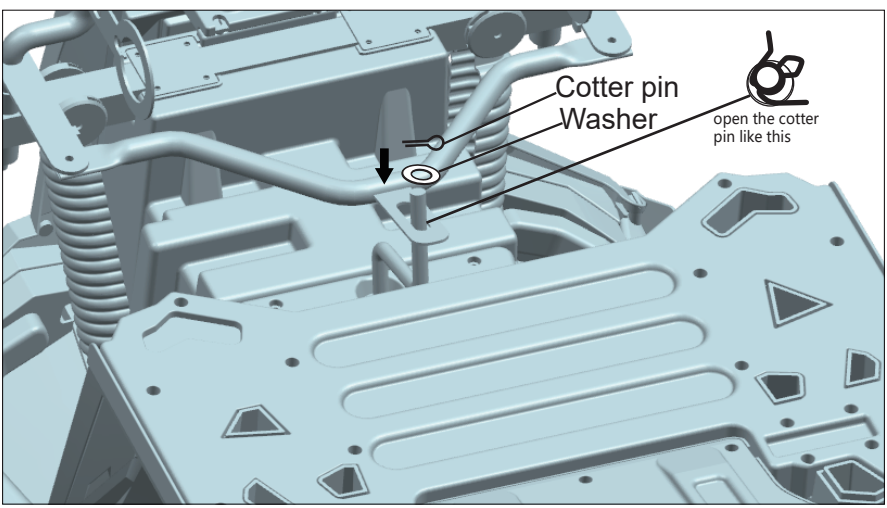

Front Wheel and Gearbox Assembly

1. Remove the washers and lock nuts from the front axle.
2. Slide a gearbox onto the front axle.
3. Plug the connector of the gearbox into the connector from the car body.
4. Attach the plum blossom part to the wheel and secure it with 3 screws.
5. Slide the driving wheel onto the front axle.
6. Slide a washer and a lock nut onto the end of the front axle. Tighten a lock nut with a socket wrench.
7. Snap the wheel hubcap onto the front wheel.

Repeat the same steps for the other front wheel.

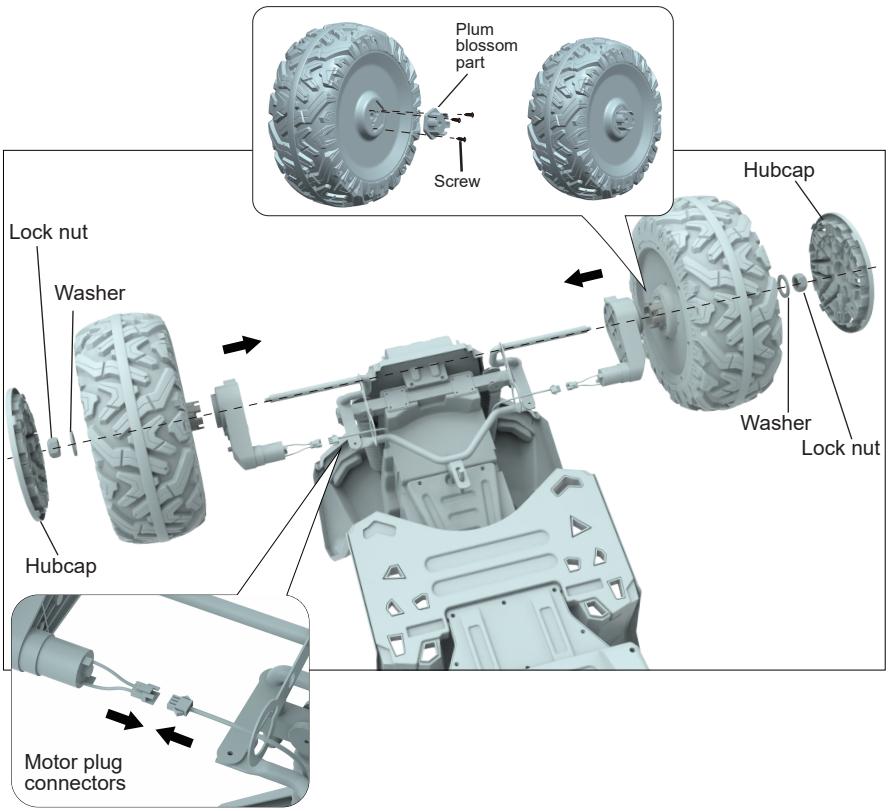

Rear Wheel Assembly

1. Remove the washers and nuts from the rear axle, then slide both rear wheels onto the axle.
2. After installing the wheels, slide the washers and nuts back onto the axle.
3. Use the two provided plastic wrenches to tighten both lock nuts simultaneously.
4. Align the hubcaps with the grooves on the wheels and apply pressure until they snap into place.

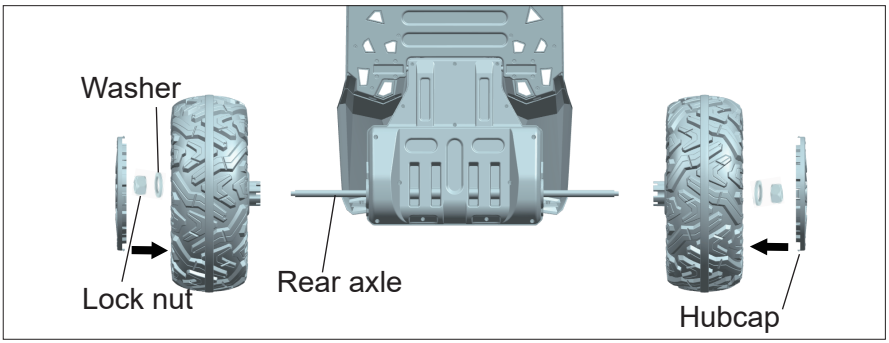

Front Bumper Assembly

1. Turn the vehicle body upright.
2. Attach the front bumper to the car body.
3. Insert 4 screws and tighten with a screwdriver.

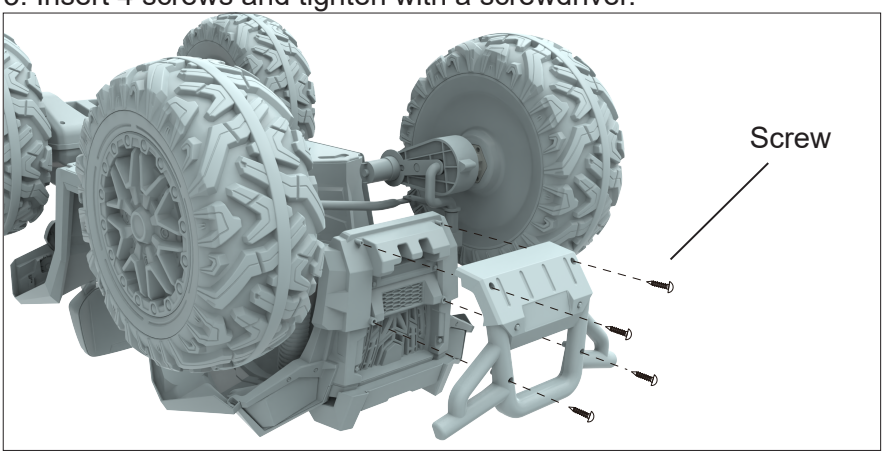

Handle Bar Assembly

1. Insert the handle bar onto the steering rod.
2. Align the holes on the handle bar with the steering rod.
3. Fasten them with the provided bolt and nut.

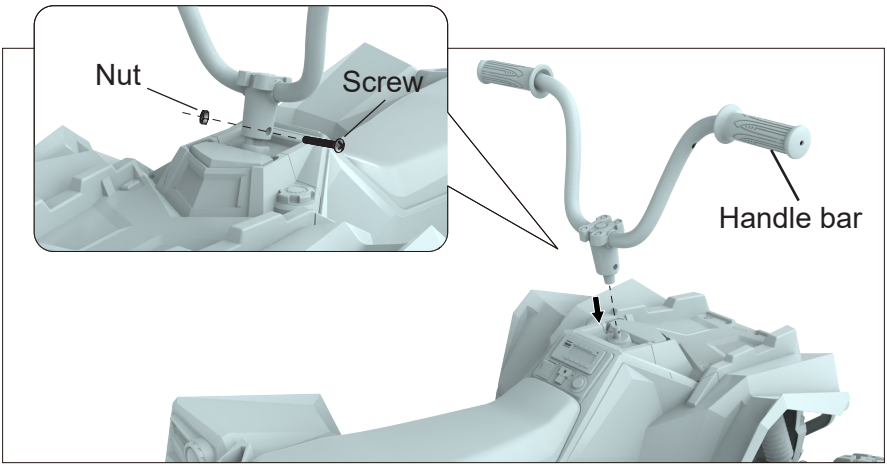

Backrest Assembly

1. Locate the two grooves on the back of the seat.
2. Insert the backrest into the grooves and push it firmly into place.

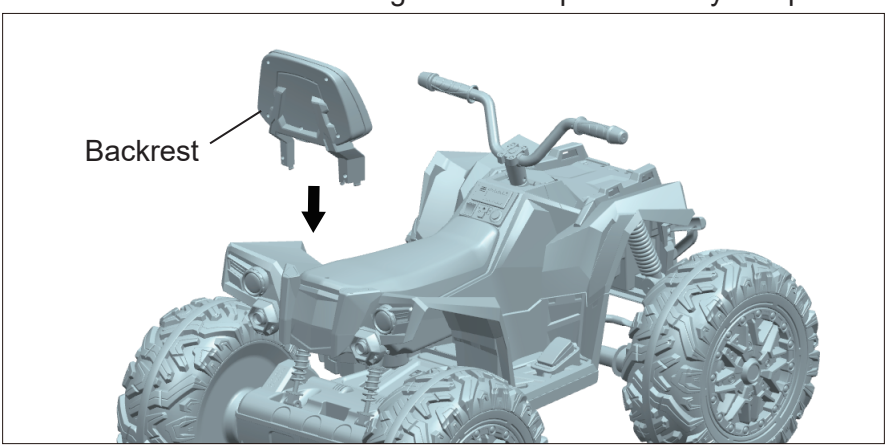

Dashboard Assembly

Insert the dashboard into the groove in front of the handle bar connection and push it firmly into place.

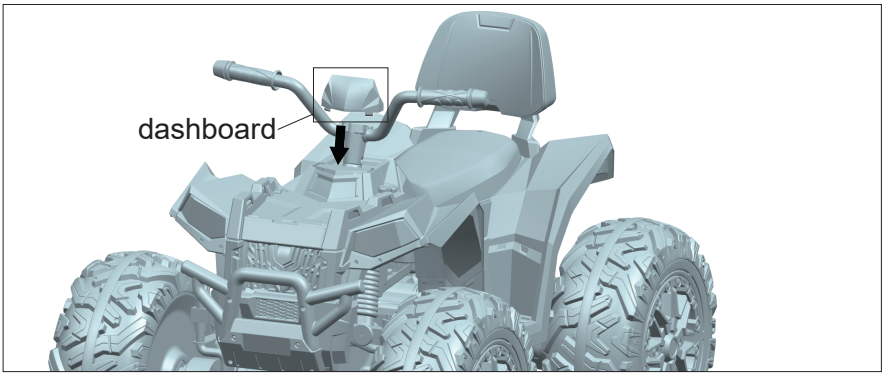

Power Connection

1. Remove 4 screws from the cover of the battery compartment and open the cover.
2. Connect the 2 red plugs.
3. Reinstall the cover onto the car body and secure it with the 4 screws.

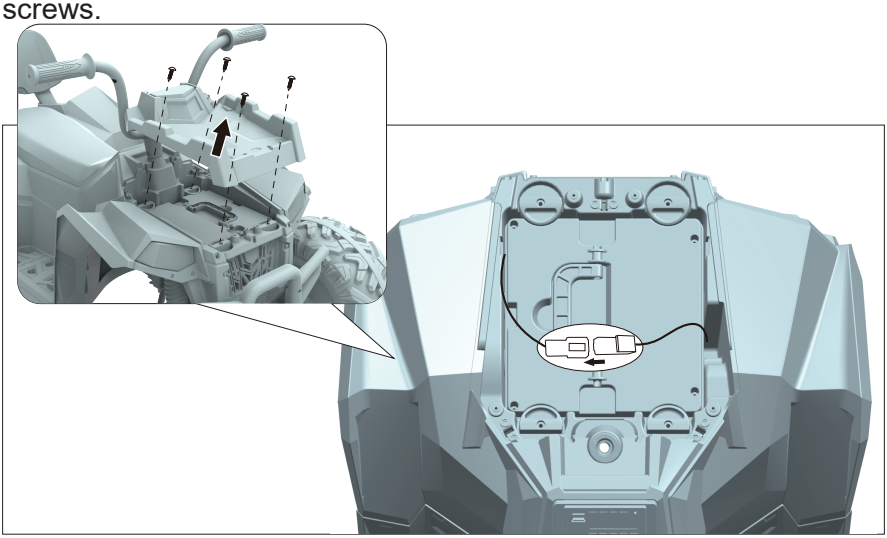

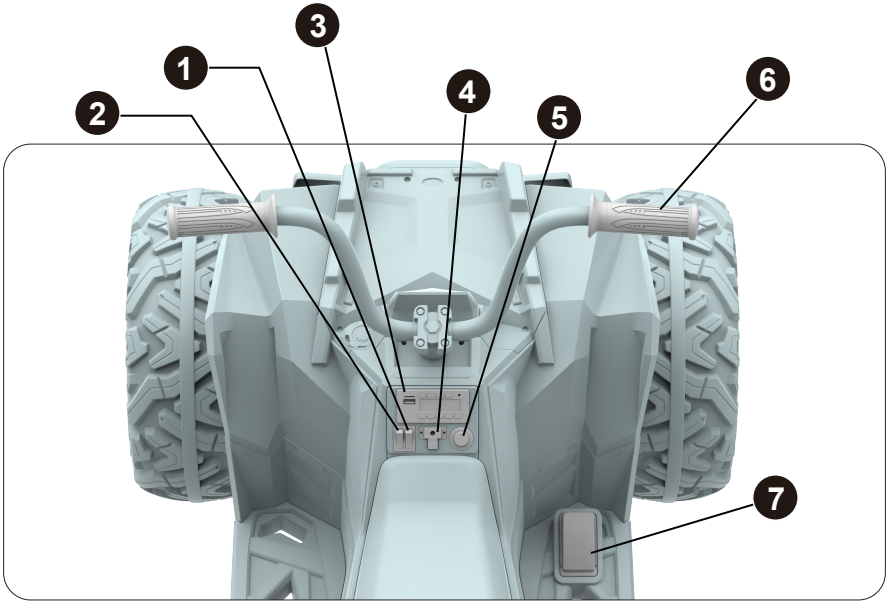

1. Speed Switch: Controls the vehicle's forward speed at high or low settings.
2. Forward/Backward Switch: Changes the vehicle's direction between forward and reverse.
3. Music Player: Plays music from external connection devices such as USB flash drives or built-in tracks.
4. Charging Port: Slide the cover flap down to expose the charging port before charging.
5. Power Switch: Turns the vehicle on or off.
6. Handlebar with Throttle: Turn the handlebar left or right to control the vehicle's direction. The throttle located on the right side of the handlebar controls acceleration.
7. Brake:
• Press down the pedal to engage the brake function.

Music Panel Introduction

MP3

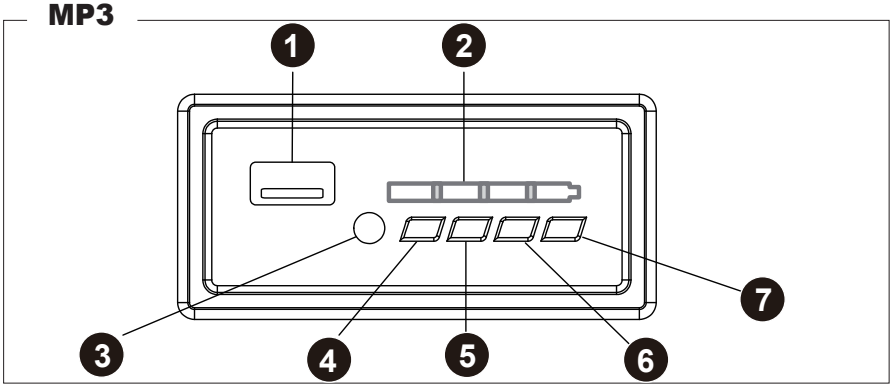

1. USB Interface: Connect a portable device to play music or audio through the product's speakers. Only MP3 format is supported.
2. Power Display: Shows the battery level. If only 1–2 bars are displayed on the battery indicator lights, please charge the battery in time.
3. AUX Interface: Connect an external audio device using a 3.5 mm cable.
4. Early Education / Volume Down: Press once to play the early education mode, press again to switch to the next track. Long press to decrease the volume.
5. Story / Pause: Press once to play a story, press again to switch to the next story. Long press to stop playback.
6. Music / Volume Up: Press once to play music, press again to switch to the next track. Long press to increase the volume.
7. Mode: Switch between Bluetooth mode and music mode.
Note: In Bluetooth mode, other function buttons (except volume control and stop) are disabled and cannot start other functions.

Wireless Connection Setup
1. Press the "Mode" button once. You will hear a beep indicating that the switch is successful. Then, turn on the Bluetooth on your phone, find SX-520ME, and connect. Once connected, you can play audio from your phone.
2. Long press the volume buttons and the stop button on the control panel to adjust the music volume or pause playback.
3. Press the Mode button again to switch back to music mode.

Charging Indication

⚠ WARNING:

This product features charging protection: all functions will be disabled while charging.
Only an adult can charge and recharge the battery!

• The power switch must be turned to the OFF position when charging.
• Before the first use, you should charge the battery for 4-6 hours. Do not recharge the battery for more than 10 hours to avoid overheating the charger.
• When the vehicle begins to run slowly, recharge the battery.
• After each use, or at least once a month, recharge the battery for 8 to 12 hours. Do not exceed 20 hours of charging.
• Use only the rechargeable battery and charger supplied with your vehicle. Never substitute the battery or the charger with another brand. Using another battery or charger may cause a fire or explosion.
• Do not use the battery or charger for any other product.

Charging Indication

How to charge the battery

Tip: The vehicle has two ways to charge the battery: from the dashboard or from the removable battery box at the front of the vehicle. One charging port is located on the dashboard, and the other is located on the removable battery box. Please follow the instructions to charge the battery correctly.

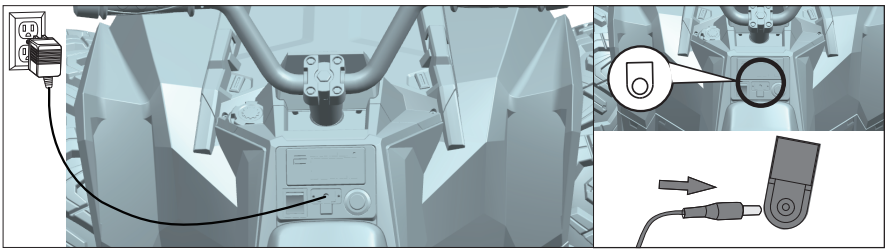

1. Charging via the Dashboard

• Slide the cover flap of the charging port downward by hand.

• Insert the provided charger into the charging port to charge the battery.

Note: The car cannot be operated while charging.

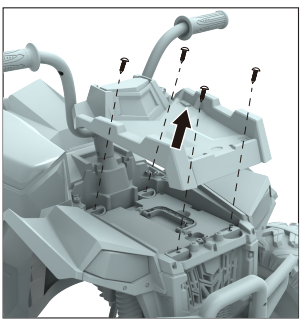

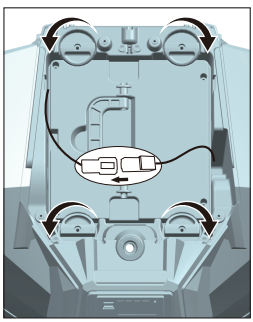

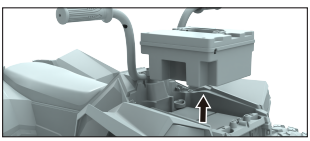

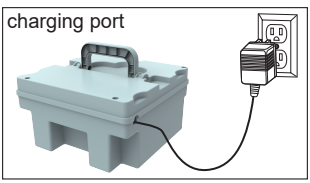

2. Charging via the Removable Battery Box

• Use a screwdriver to remove the four screws on the front cover of the vehicle.

• Rotate the 4 clips securing the battery to unlock it.

• Disconnect the 2 red power plugs.

• Remove the battery from the vehicle and use the provided charger to charge it.

Troubleshooting Guide

IMPORTANT! If you experience a problem with your vehicle, first check the Problems and Solutions Guide below. If you still experience a problem, please send an email to:

acetoy.service@gmail.com

Problem	Possible Cause	Solution
Vehicle does not run/Can not move	Power cable is not connected	Please refer to the installation steps to ensure that all wire connectors are connected. If you are not sure if the power cable is connected well or not, reconnect the power cable and see if the vehicle can be turned on.
	Undercharged battery	Charge the battery. A new battery should have been charged for at least 12 hours before using the vehicle for the first time. After first-time use, recharge the battery for 8-12 hours after each use. Never charge the battery longer than 20 hours.
		Check all connectors. Make sure the charger connector is plugged into the battery, and that the charger is plugged into the wall.
		Make sure power flow to the wall outlet is "ON".
	Charging Protection	The car can't be started up at all when in charging state. Please unplug the charger from the wall outlet and unplug the charging port from input socket.
	Charger is not working	There is no sure way to tell if your charger is working unless you have a voltmeter. If you suspect there is a problem with your charger, contact the seller or Customer Service for diagnosis and repair.
	Dead battery	If your battery is old or if you have not followed Battery Care instructions, your battery may be dead. If you are unsure whether or not the battery is dead, contact the seller or Customer Service for diagnosis and repair.
	Motor damage	Contact the seller or Customer Service for diagnosis and repair.
Vehicle was running but suddenly stopped	Loose wire or loose connectors	Please refer to the installation steps and check all wires and connectors to ensure that all wire connectors are connected, and that there are no loose wires around the motors.

Problem	Possible Cause	Solution
Vehicle was running but suddenly stopped	Tripped thermal fuse	A thermal fuse may "trip" and shut down the operation of the vehicle if the vehicle is overloaded or the driving conditions are too severe. The fuse will automatically reset itself after approximately 25 seconds, allowing the vehicle to resume normal operation. To avoid repeated automatic shutdowns, do not overload the vehicle by exceeding the 154 lbs maximum weight capacity or by towing anything behind the vehicle. Do not drive up hills or run into fixed objects, which can cause the wheels to stop spinning while power is still being supplied to the motors. If a thermal fuse continually trips. Contact the seller or Customer Service.
Short run time	Undercharged battery	Charge the battery. A new battery should have been charged for at least 12 hours before using the vehicle for the first time. After first-time use, recharge the battery for 8-12 hours after each use. Never charge the battery longer than 20 hours.
		Check all connectors. Make sure the charger connector is plugged into the battery, and that the charger is plugged into the wall.
		Make sure power flow to the wall outlet is "ON".
	Overcharged battery	There is no sure way to tell if your charger is working unless you have a voltmeter. If you suspect there is a problem with your charger, contact the seller or Customer Service for diagnosis and repair.
	Battery is old and will not accept full charge	Even with proper care, a rechargeable battery does not last forever. Average battery life is 1 to 3 years depending on vehicle use and use conditions. If you are unsure, consult the seller or Customer Service.
Vehicle runs sluggishly	Battery needs charging	Be sure to charge the battery after each use.
	Battery is old and will not accept full charge	Even with proper care, a rechargeable battery does not last forever. Average battery life is 1 to 3 years depending on vehicle use and use conditions. If you are unsure, consult the seller or Customer Service.
	Vehicle is overloaded	Do not exceed the maximum load capacity of 110 lb or tow objects behind the vehicle.

Troubleshooting Guide

Problem	Possible Cause	Solution
Loud clacking or grinding noise from motor gearbox	Broken gears	Contact the seller or Customer Service.
Vehicle does not respond to remote control	Remote is not paired with the vehicle	Pair the remote with the car by following the instructions.
	Batteries in the remote control have run down	Replace new batteries.
	Remote is damaged	Contact the seller or Customer Service
Charger gets warm during use	It is normal for some chargers to get warm during use	No action required. If your charger does not get warm during use, it does not mean that it is not working properly.
Vehicle can't turn right/left	The steering wheel is not connected properly	If the car only can be turned left/right by controlling the remote, but can't turn left/right by using the steering wheel, please reinstall the steering wheel.
	The front axle or steering hook is not installed in the correct way	1. Please refer to the installation video on the product page to ensure that front wheel bracket is installed properly. 2. Make sure that the steering hook is hooked with the hole of front wheel bracket.
	The steering motor is broken	If your car steers normally in manual mode, but won't steer when using the remote, please contact customer service to get a new steering motor for replacement.
Battery is not charging	Charger is broken	If the indicator light of the charger keeps showing red and never turns green, please contact customer service.
	Dead Battery	Please replace a charger and try to charge the car first. If the indicator light of the charger is still red after changing a new charger, which means there is a problem with the battery and needs to replace the battery.
	Charging port is broken	When the charger is plugged into the wall plug or socket, but the green light of the charger is always on (the battery is run out of power at this time), please contact customer service to get a new charging port.

For assistance, please send an Email to: **acetoy.service@gmail.com**

• It is the parents' responsibility to check the main parts of the toy before each use. Regularly inspect for potential hazards such as the battery, charger, cables or cords, plug, and screws that fasten the enclosure or other parts. If any damage is found, do not use the toy until the damage has been properly repaired.
• Make sure the plastic parts of the vehicle are not cracked or broken.
• Occasionally use a lightweight oil to lubricate moving parts such as wheels.
• Park the vehicle indoors or cover it with a tarp to protect it from wet weather.
• Keep the vehicle away from sources of heat, such as stoves and heaters. Plastic parts may melt.
• Recharge the battery after each use. Only an adult should handle the battery. If the vehicle is not in use, recharge the battery at least once a month.
• Do not wash the vehicle with a hose. Do not wash the vehicle with soap and water. Do not drive the vehicle in rainy or snowy weather. Water will damage the motor, electric system, and battery.
• Clean the vehicle with a soft, dry cloth. To restore shine to plastic parts, use a non-wax furniture polish. Do not use car wax. Do not use abrasive cleaners.
• Do not drive the vehicle in loose dirt, sand, or fine gravel, which could damage the moving parts, motors, or the electric system.
• When not in use, please turn off the power switch and disconnect the battery connection.

Battery Fuse

The battery features a thermal fuse with a reset fuse that will automatically trip and cut all power to the vehicle if the motor, electric system, or battery is overloaded. The fuse will reset and power will be restored after the unit is turned OFF for 20 seconds and then turned ON again. If the thermal fuse trips repeatedly during normal use, the vehicle may need repair. Contact the seller or customer service.

To avoid losing power, follow these guidelines:
• Do not overload the vehicle.
• Do not tow anything behind the vehicle.
• Do not drive up steep slopes.
• Do not drive into fixed objects, which may cause the wheels to spin, causing the motor to overheat.
• Do not drive in very hot weather; components may overheat.
• Do not allow water or other liquids to come in contact with the battery or other electric components.
• Do not tamper with the electric system. Doing so may create a short, causing the fuse to trip.

Disposal of Battery





• Do not dispose of your lead-acid battery in a fire. The battery may explode or leak.
• Do not dispose of a lead-acid battery in your regular, household trash.
• The lead-acid battery must be recycled or disposed of in an environmentally sound manner.
• The incineration, landfilling, or mixing of sealed lead-acid batteries with household trash is prohibited by law.
• Return an exhausted battery to your local approved lead-acid battery recycle, such as a local seller of automotive batteries or your local waste management officials for other information regarding the environmentally sound recycling and disposal of lead-acid batteries
• Do not use old and new batteries together, or mix different types of batteries.

Warranty

For the original purchaser, the six-month limited warranty covers our ride-on vehicle.
This warranty covers normal use and does not cover the vehicle or battery if damaged by unreasonable use, neglect, abuse, accident, misuse, improper service or other causes not arising out of defects in material or workmanship. Evidence of any attempt at consumer repair will void this warranty.

We will be happy to correct any problems that you may have or answer any of your questions regarding the purchase of this product. Please contact us at our customer service email:
acetoy.service@gmail.com

Criteria of product operation:
ASTM F963 CPSIA EN71 EN62115