Installation Instruction

Shoe Cabinet-023

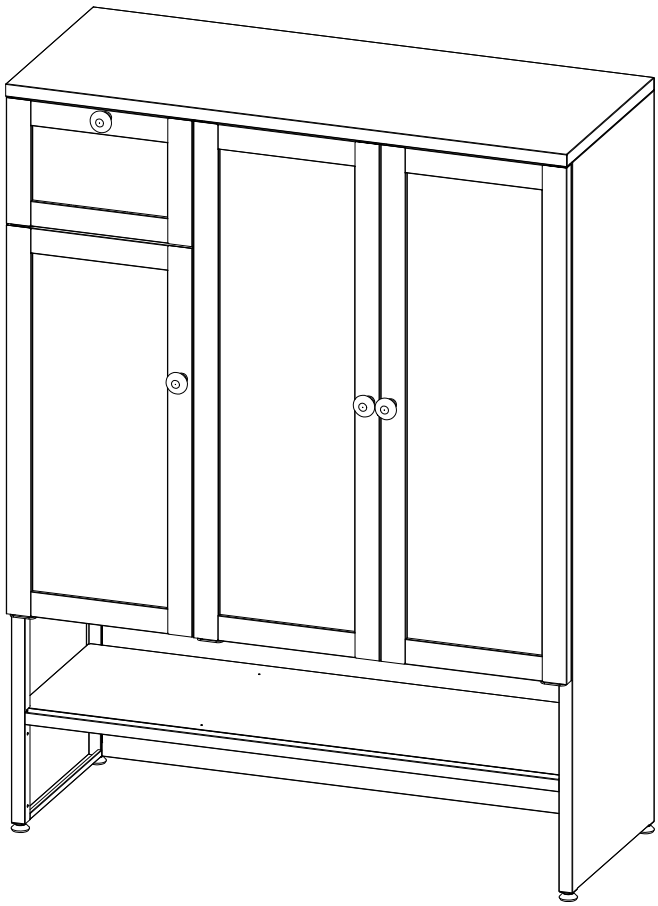

If you have any questions about accessories, products or anything else after receiving the package please contact us promptly. We will be happy to help you solve any problem you have about the product.

Thank you very much for your order!

About Us

We have focused on the furniture industry for over a decade. These years of experience have given us a better understanding of your needs. We focus on products. High quality factory production line and technology can provide you with the most reliable products. This is our goal and our mission.

We do not just crate a furniture brand, it represents our respect for individual expression. We are honored to add our designer furniture to your beautiful home environment. We want our products to give you an unrivaled experience.

In our world, furniture is no longer just a need, but an attitude towards life.

Must Read Before Installation

NOTICE

1.Check all material against accessories list to be sure it is correct and free from damage.
2.Identify all parts as they are unpacked.
3.Please read all instructions prior to assembly.
4.Use correct hardware as specified in the assembly instructions.
5.Please work with pictures and text when installing.

CAUTION

Handle all components carefully when installing.

Tighten all hardware securely.Retain instructions for future reference.

SAFETY TIPS

Some parts may have sharp edges.

Take care when handling various pieces to avoid injury.

For your safety, wear work gloves when assembling.

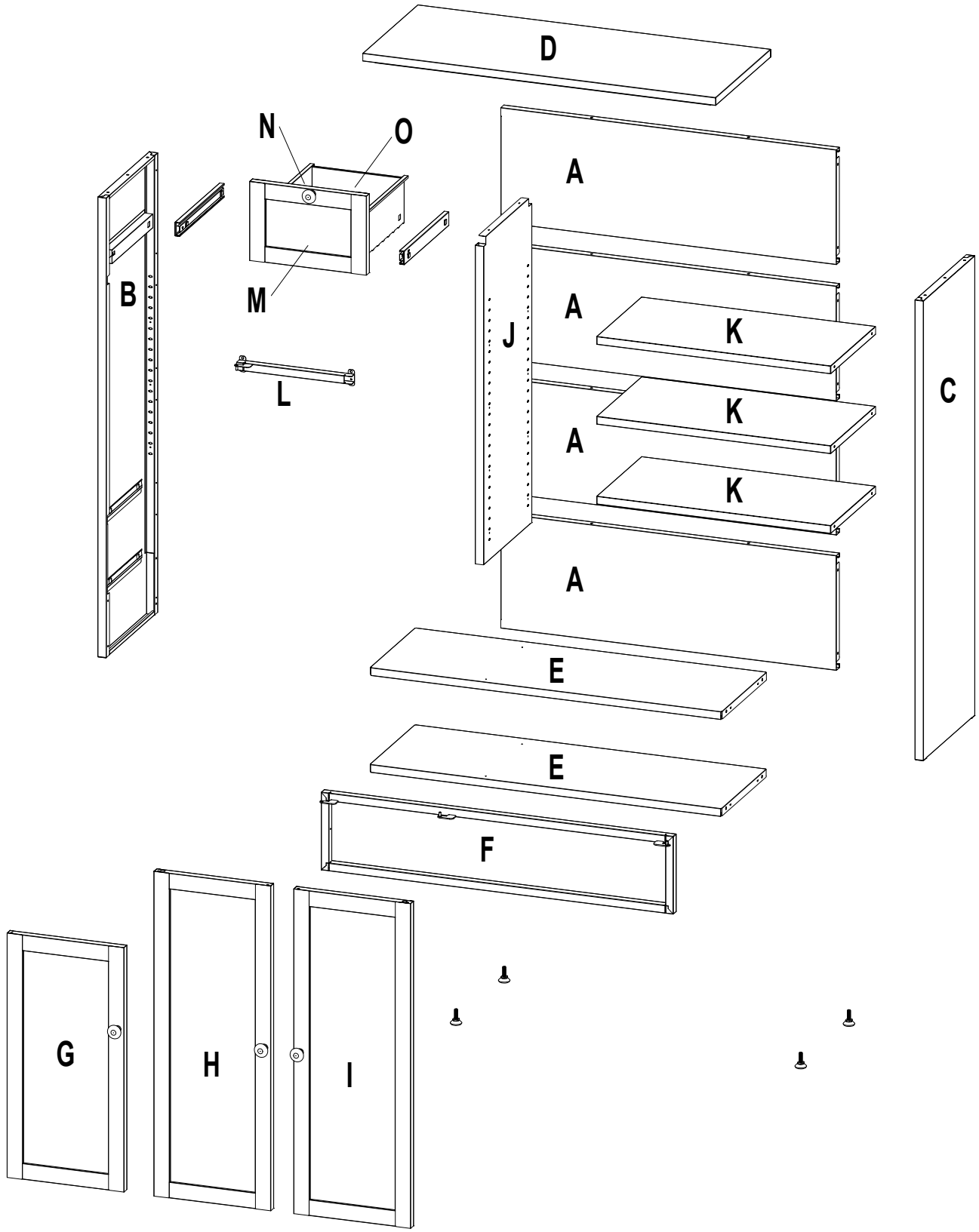
D
N
O
A
B
M
J
A
K
C
K
L
A
K
A
E
E
F
G
H
I

Included Accessories

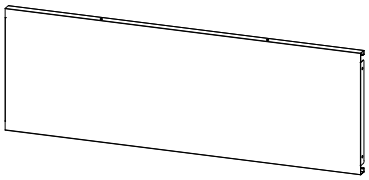

-A 4 pcs

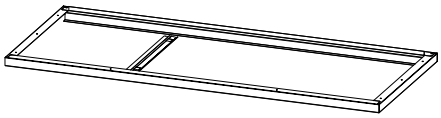

-D 1 pcs

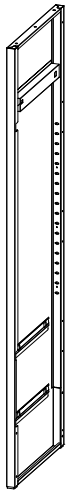

-B 1 pcs

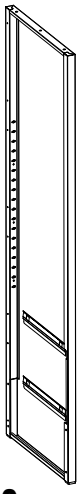

-C 1 pcs



-E 2 pcs

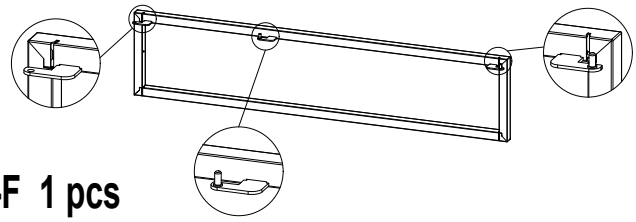

-F 1 pcs

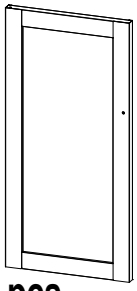

-G 1 pcs

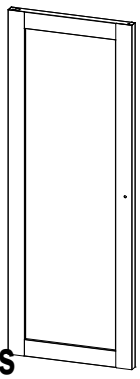

-H 1 pcs

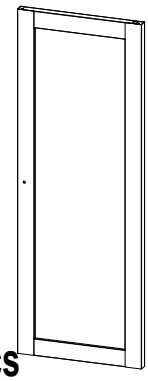

-I 1 pcs

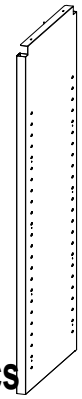

-J 1 pcs



-K 3 pcs

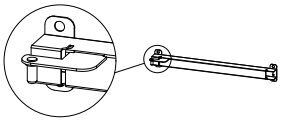

-L 1 pcs

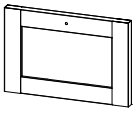

-M 1 pcs

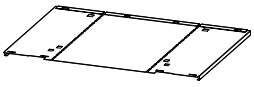

-N 1 pcs

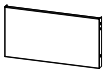

-O 1 pcs

Assembling

Estimated time for assembly

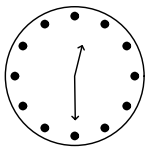

35 : 00

- Use the packaging carton as a working surface to prevent product damage during assembly.
- Phillips head screwdriver.
- Suggest 2 people to assemble this product.

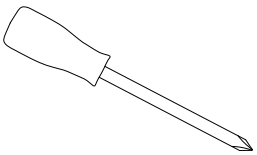

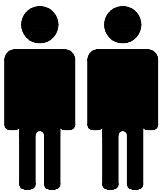

Warnings

- This product is not intended for use by children under 3 years of age. Children must be under adult supervision to use the product.
- Children should not climb on or play near the product in order to avoid tipping over the product and causing serious injury.
- During assembly, keep the metal or small parts out of the reach of the children. It may be fatal if swallowed or inhaled.
- To avoid the potential dangers of suffocation, please keep all parts and packaging (film, plastic bags, foam, etc.) away from babies and children.
- Please fix the product to the wall with the anti-toppling kit to add safety.
- Please wear gloves to assemble this product.

Included Hardwares

Code	Description	Qty
1		M4*8 36 pcs
2		4 pcs
3		M4*5 1 pcs
4		M4*22 3 pcs
5		12 pcs
6		12 pcs
7		M5.2 3 pcs
8		4 pcs
9		1 pcs
10		M4.2*32 2 pcs
11		2 pcs
12		M4*10 2 pcs
13		1 pcs
14		6 pcs
15		2 pcs
16		2 pcs

Step1

Fix the back panel A to the side panels B and C with the 4 accessories ①.
Note: Back panel A has large round holes facing up and small round holes facing down .

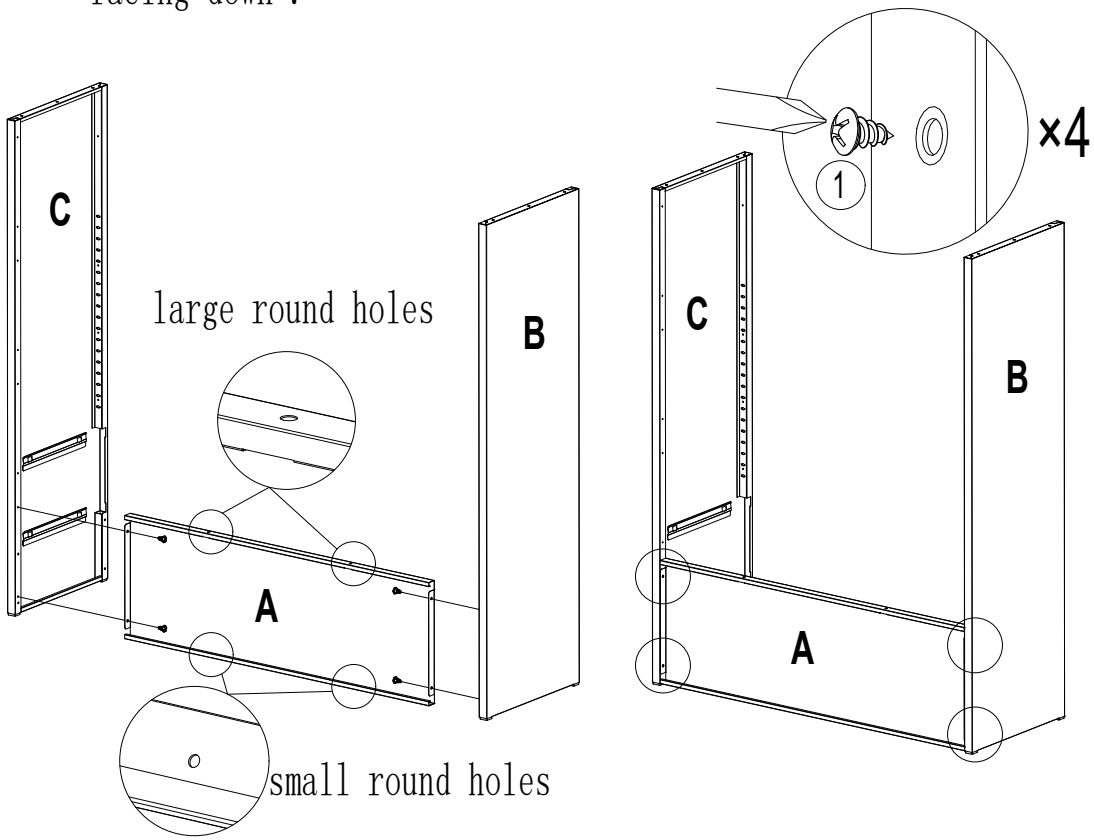

①

M4*8 ×4

Step2

Fix the back panel A to the side panels B and C with the 6 accessories ①.
Note: Back panel A has large round holes facing up and small round holes facing down .

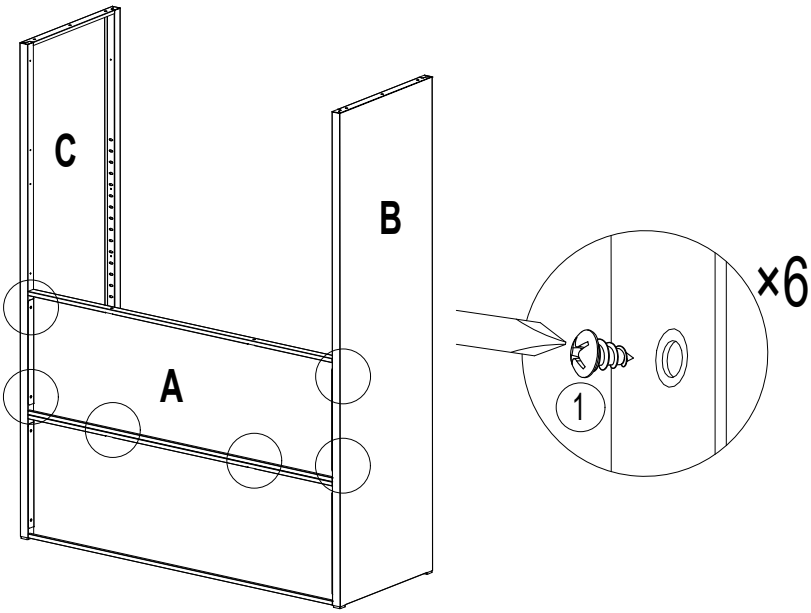

①

M4*8 ×6

Step3

Fix the back panel A to the side panels B and C with the 6 accessories ①.
Note: Back panel A has large round holes facing up and small round holes facing down .

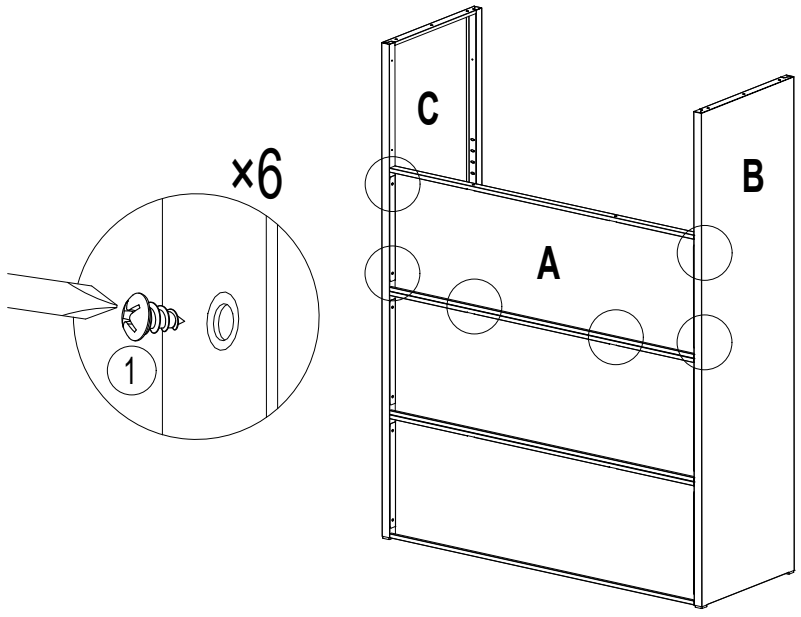

①

M4*8 ×6

Step4

Fix the back panel A to the side panels B and C with the 6 accessories ①.
Note: Back panel A has large round holes facing up and small round holes facing down .

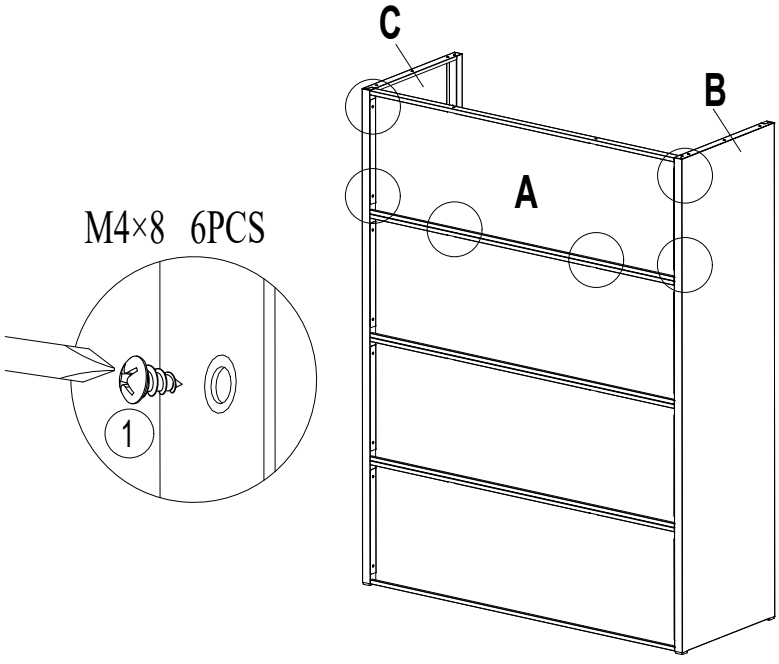

①

M4*8 ×6

Step5

Snap F into the slots in side panels B and C.

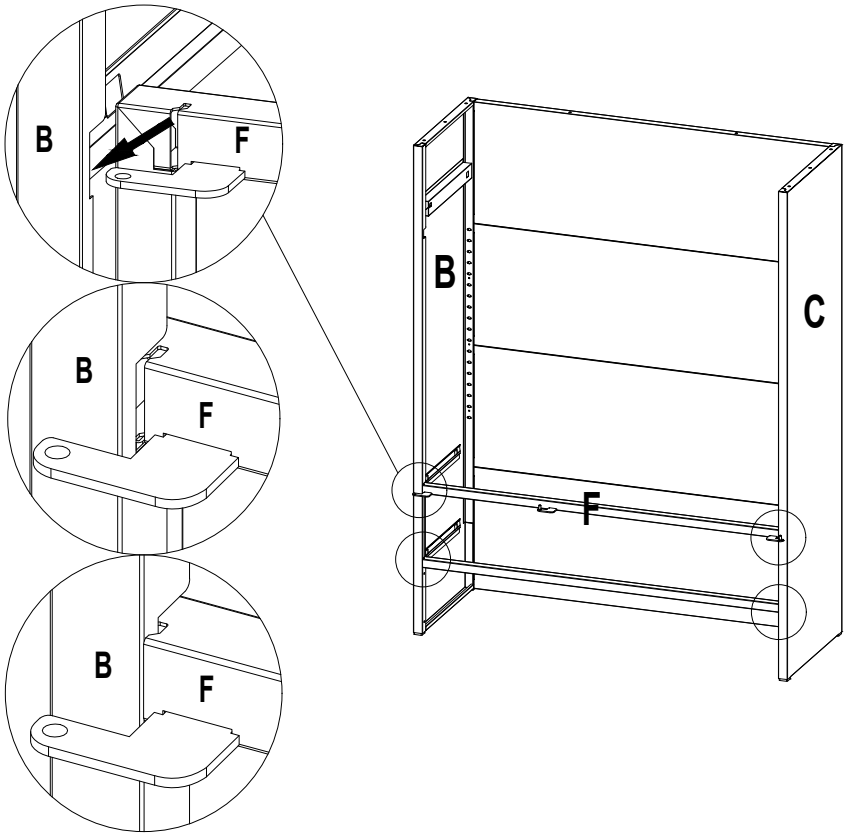

Step6

Snap E into the slots in side panels B and C.

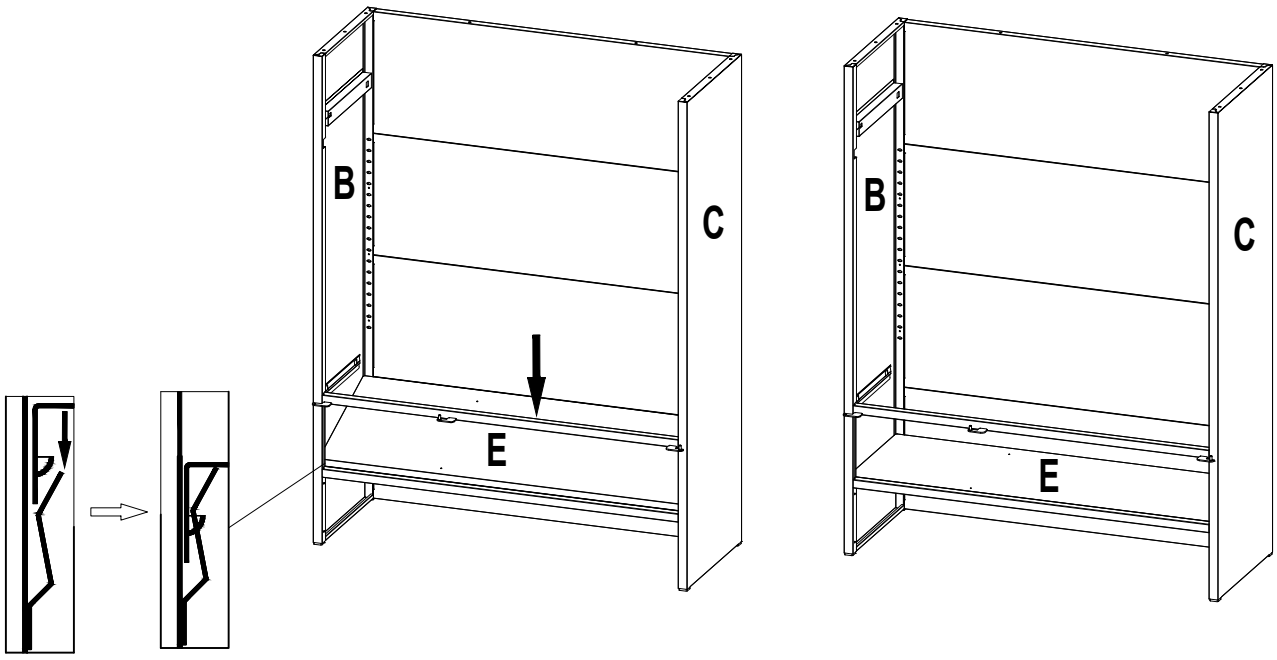

Step7 Snap E into the slots in side panels B and C.

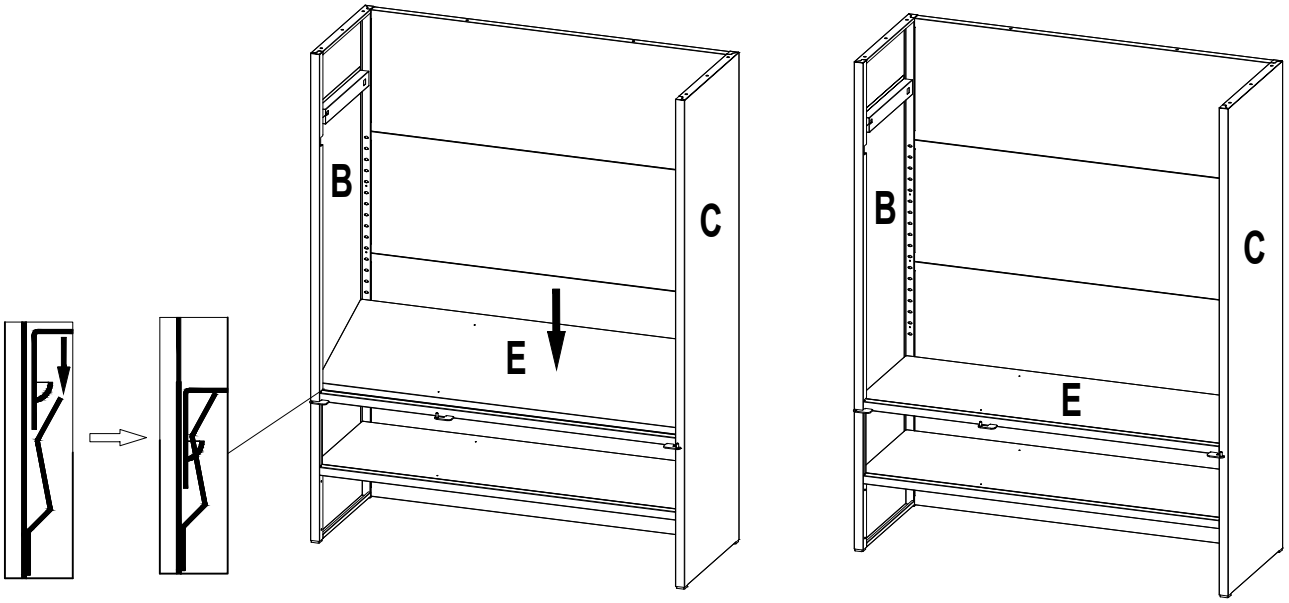

Step8 Fix J to E with 2 accessories ①.

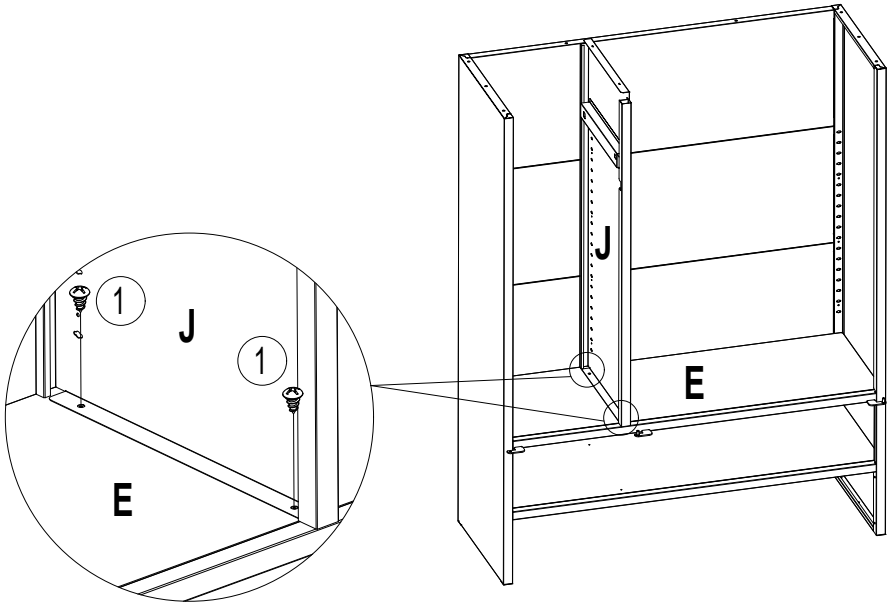

①



M4*8
×2

Step9 Fix L in the slot of the side panels B and J.

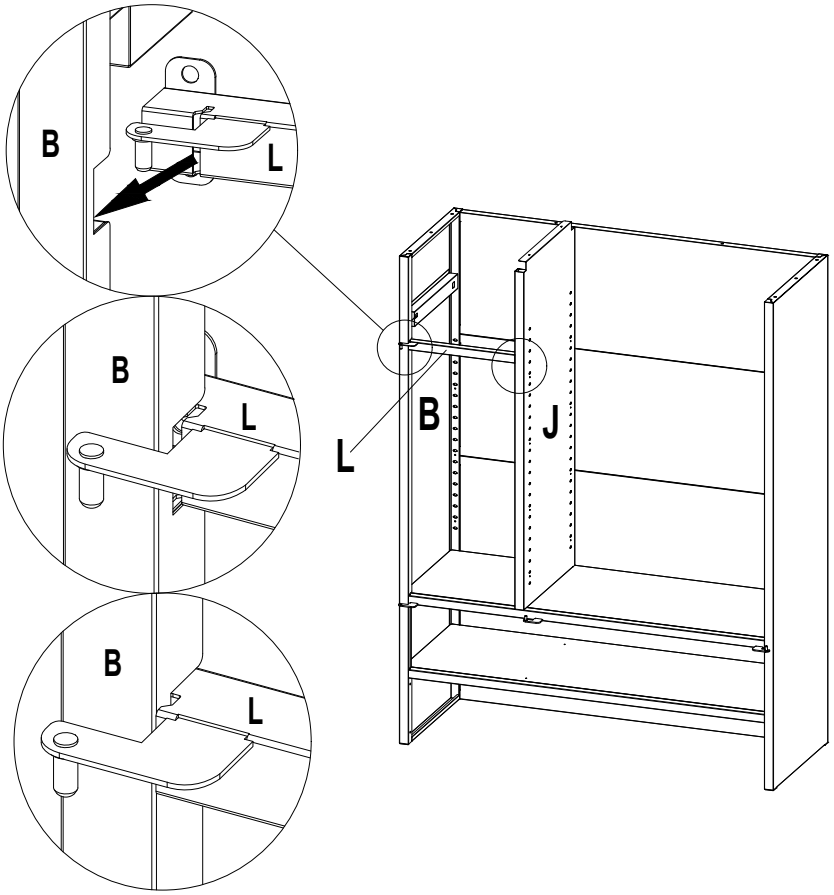

Step10 Fix L to the side panels B and J with 2 accessories ①.

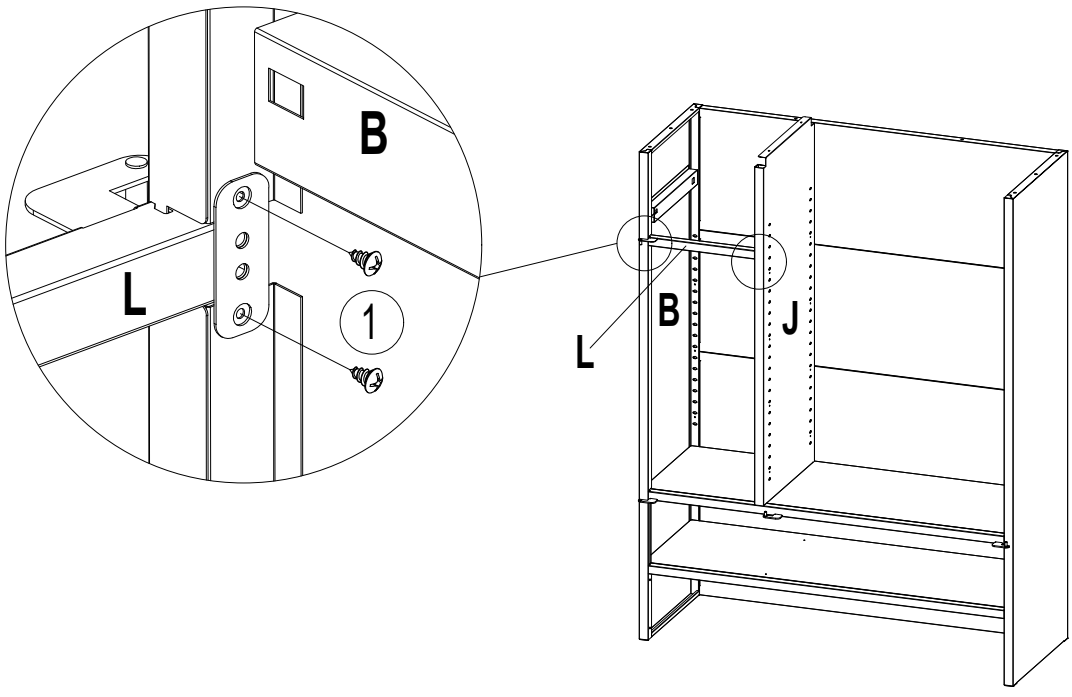

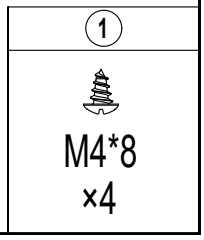

Step11

Push the top panel D from the left into the installation so that the top of the side panel J snaps into the clips of the top panel D.
Fix the top panel D to the back panel A, side panels B and C with the 8 accessories ①.

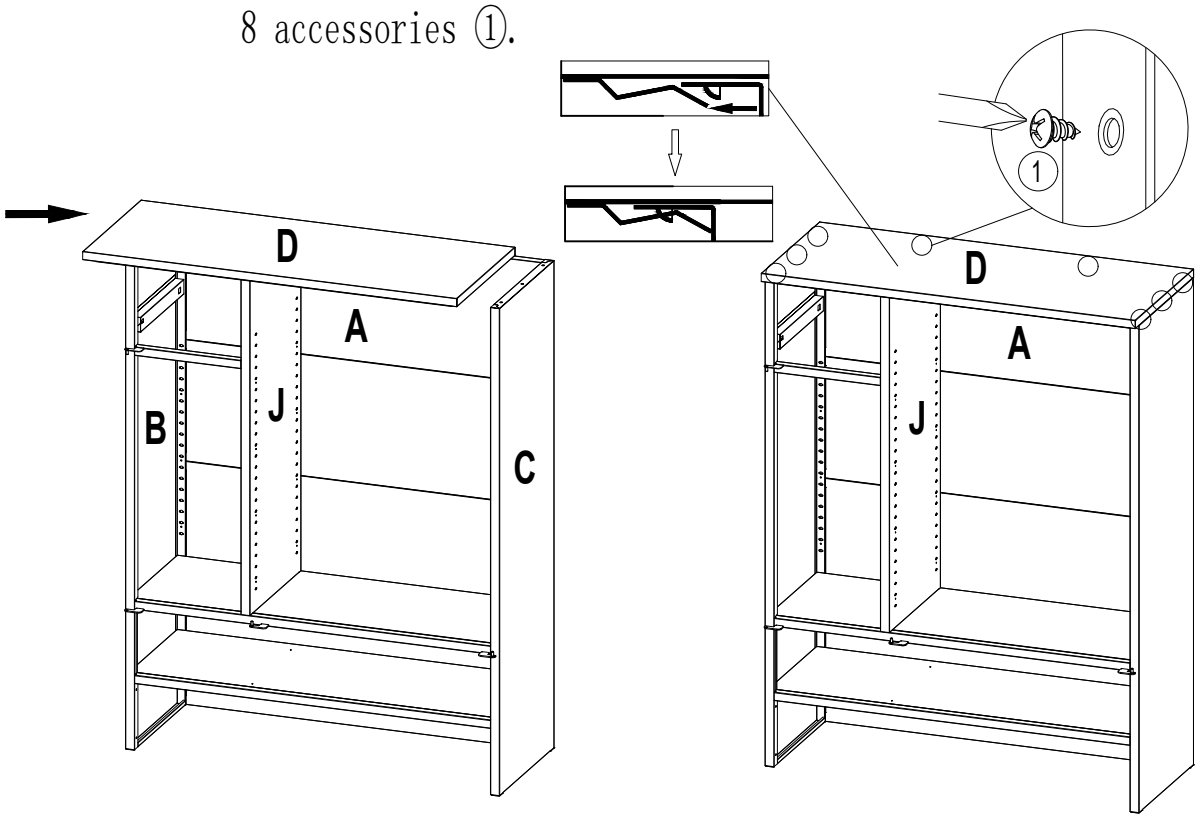

①

M4*8 ×8

Step12

Fix accessory ⑥ (snap) to the holes in side panels J and C.

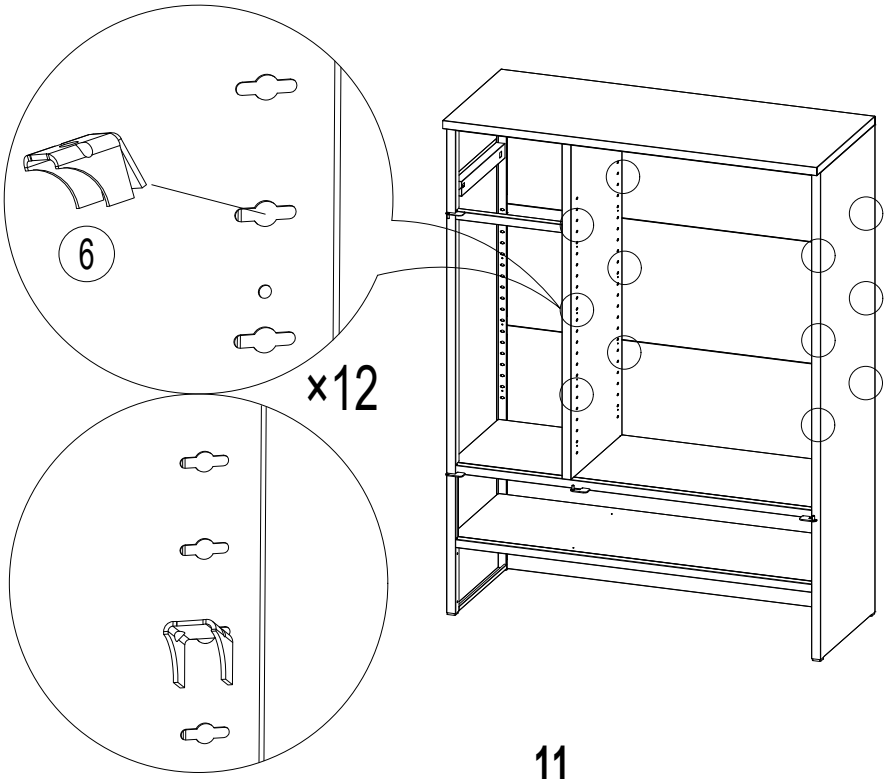

⑥

×12

Step13 Put the K on the clips and fix with the 12 accessories ⑤ (retainers).

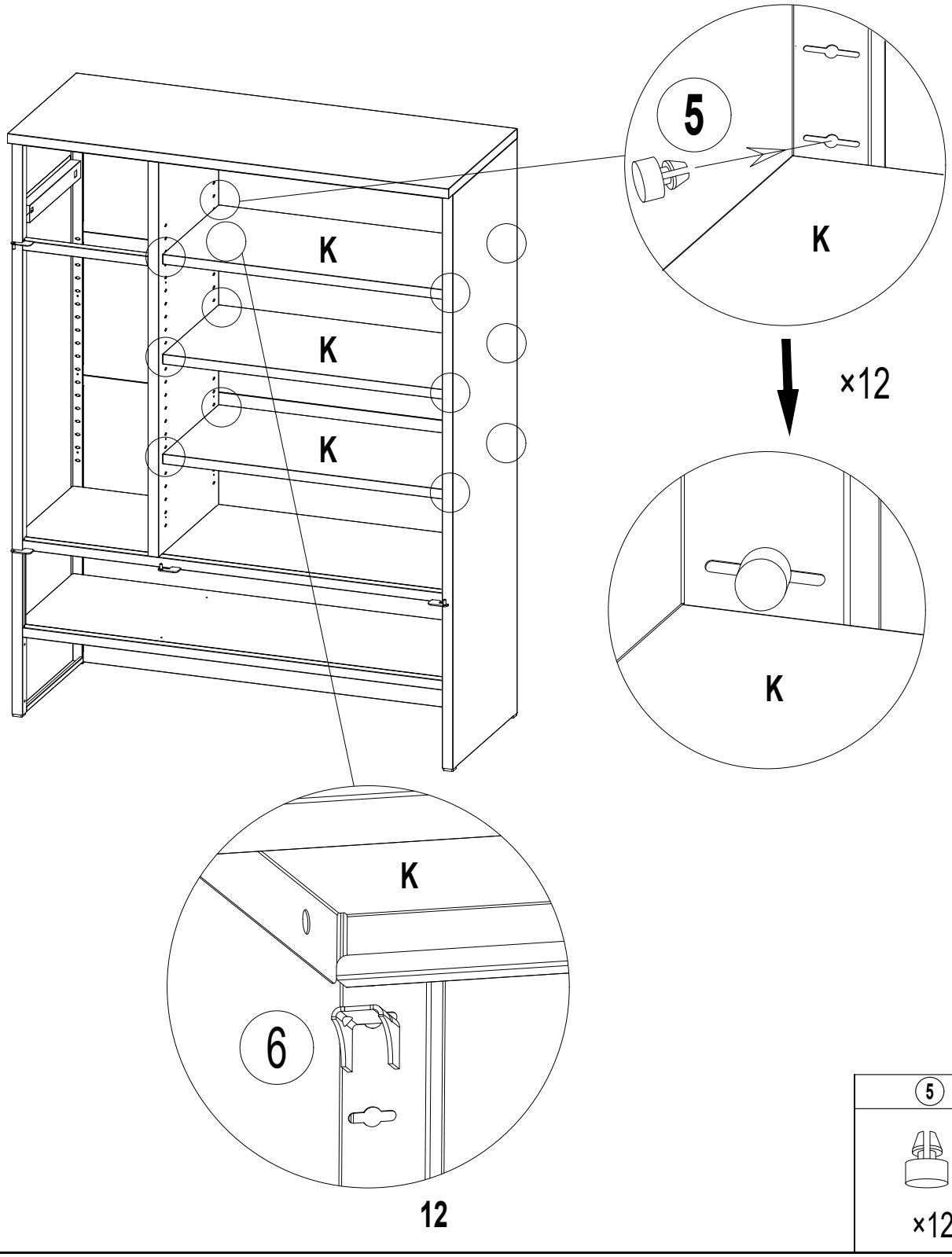

Step14

Pull the left and right rails of accessory ⑬completely apart. Pull the black tabs on the left and right inner rails as shown in the illustration to separate the left and right slides into left and right outer rails and inner rails.

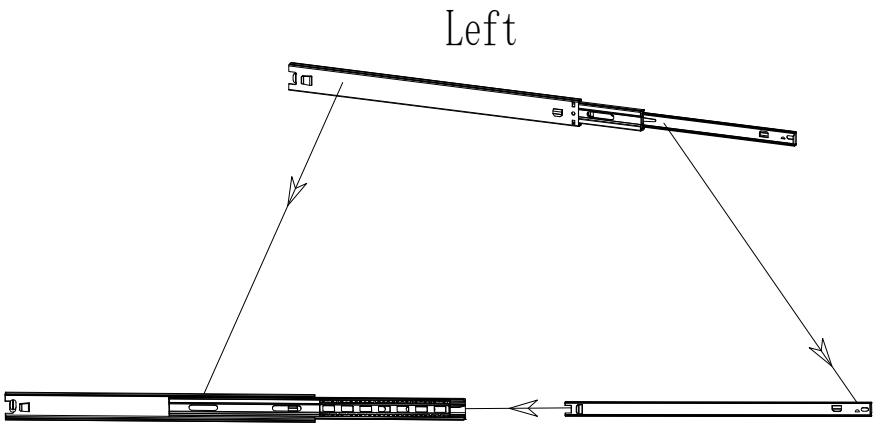

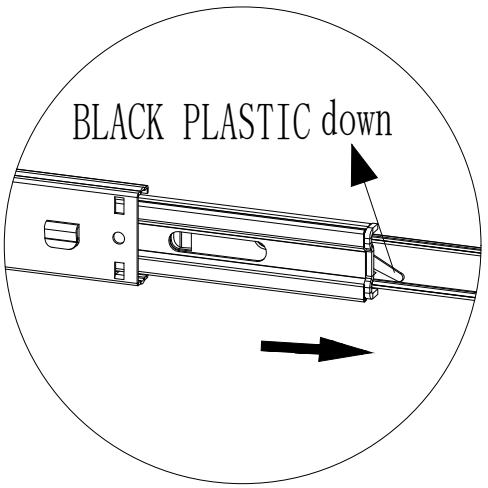

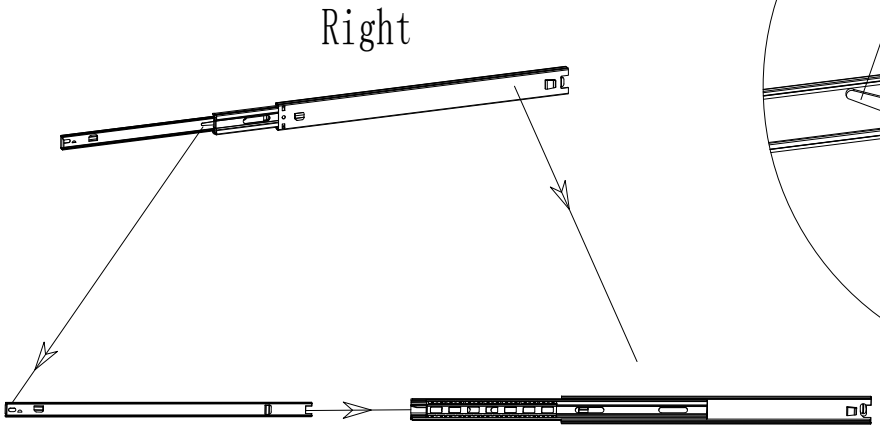

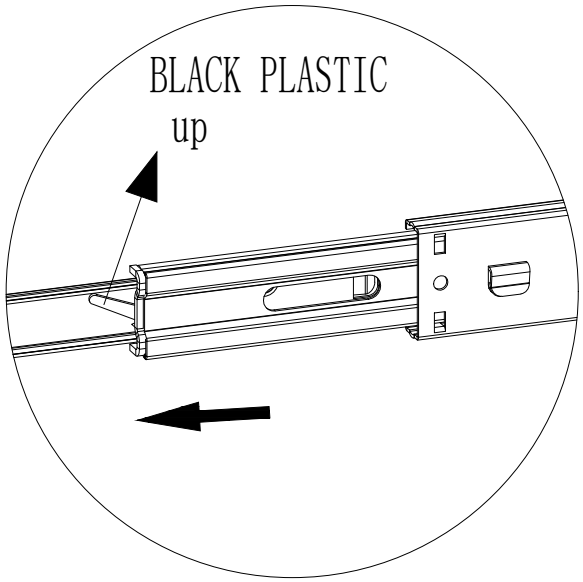

⑬



×1

Step15

Fold both sides of N to 75° and then snap panel M into the slot in N to secure.

Push the back panel O from the inside of the drawer and secure it in the slot on the back side of N.

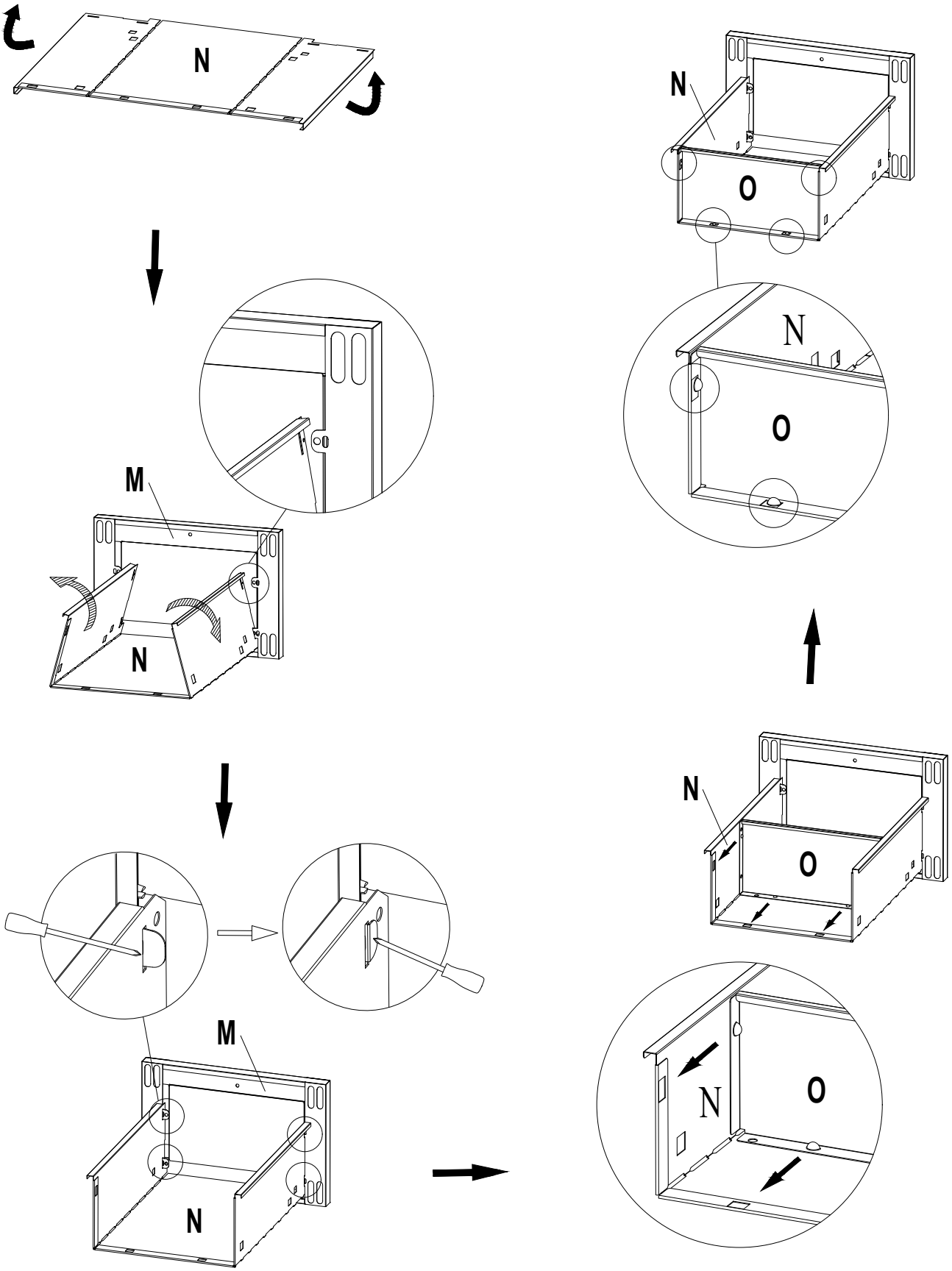

Step16

Fix the left and right inner rails to each side of the drawer.
Step 1: Snap the rear of the inner rail into the square holes at the back of the drawer.
Step 2: Snap the front snap of the inner rail into the front square holes of the drawer

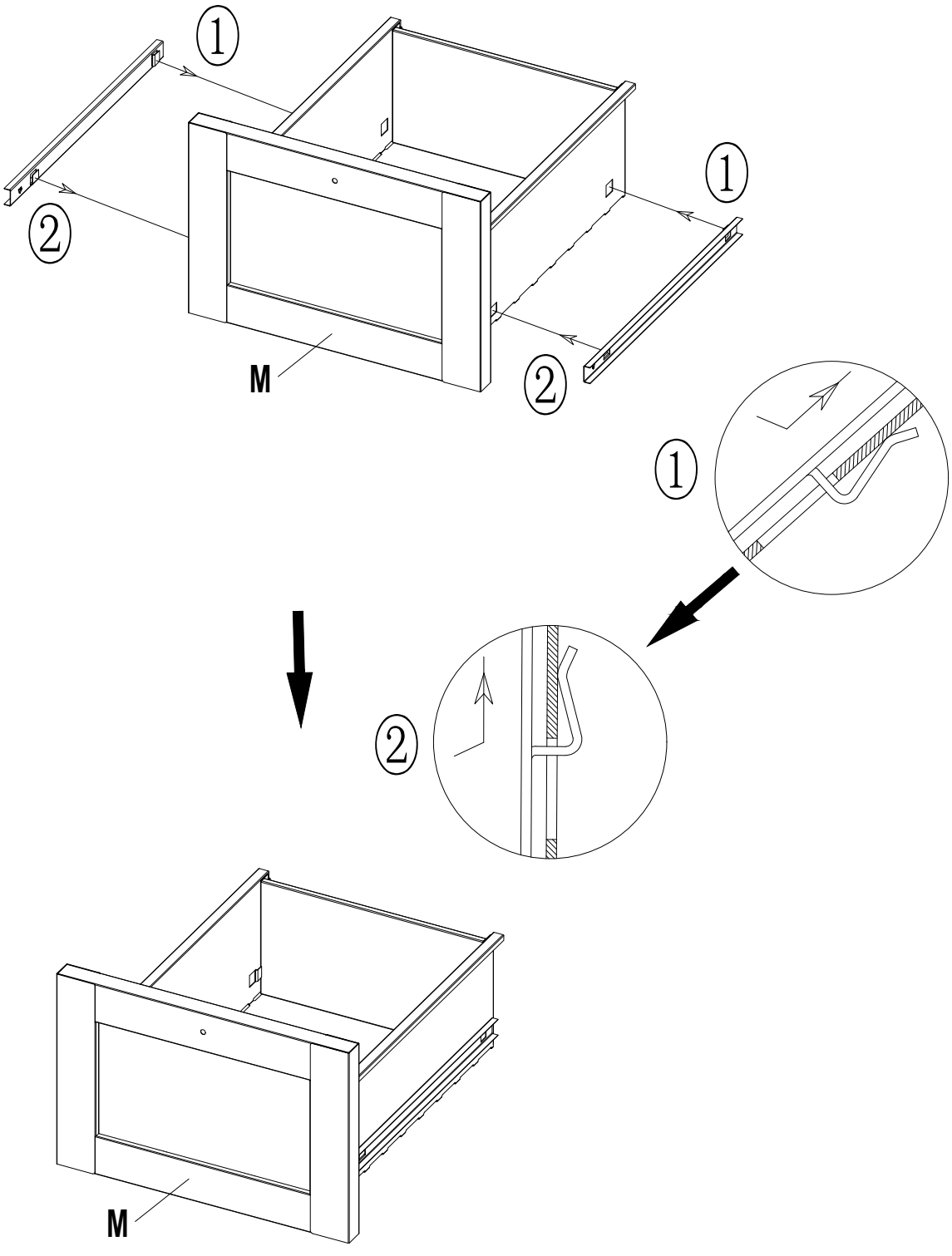

Step17

Use 1 accessories ③ to fix accessories ② (handle) to the drawer panel M.

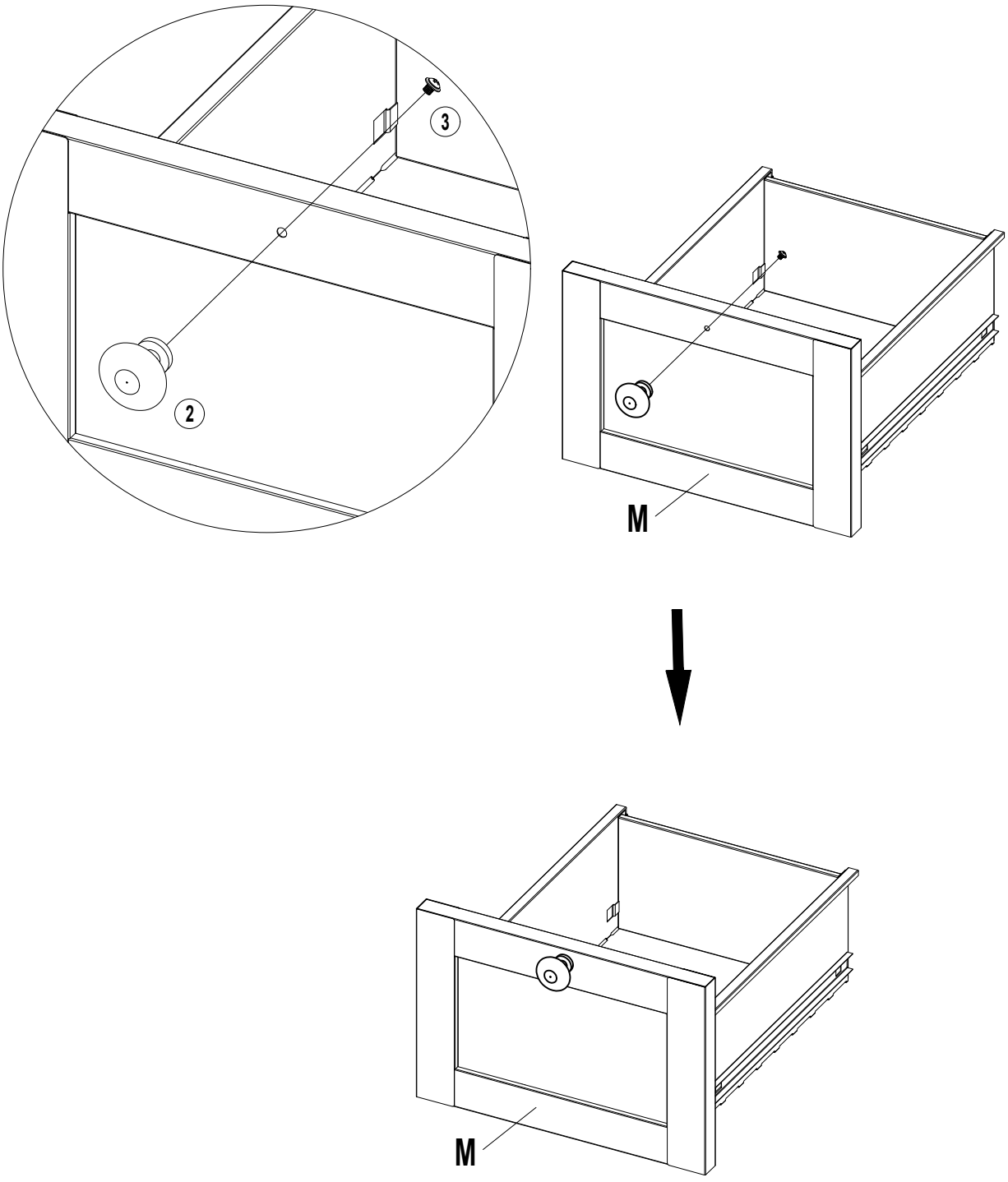

②	③
×1	M4*5 ×1

Step18

Fix the left and right outer rails to the side panels B and J respectively.

Step 1: Snap the rear of the outer rail into the square holes at the back of the side panels B and J.

Step 2: Snap the front snap of the outer rail into the front square holes of side panels B and J.

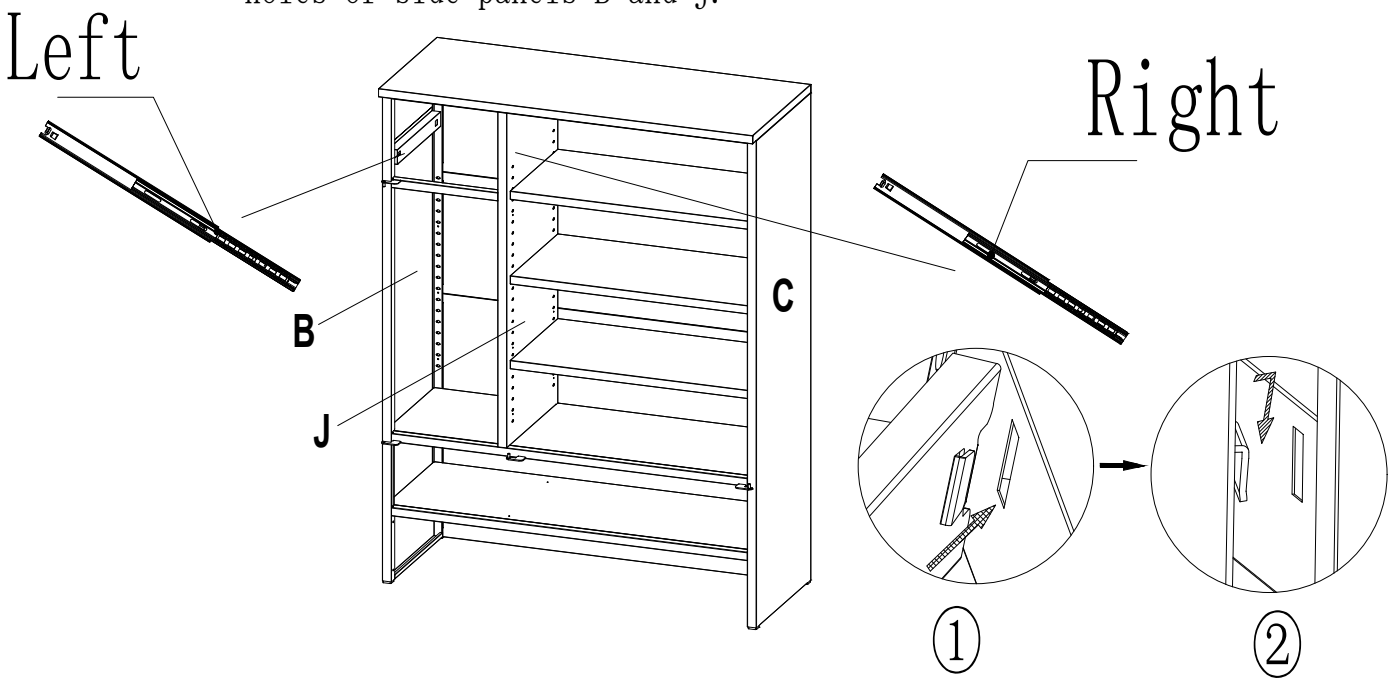

Step19

Align the left and right inner and outer rails and install the assembled upper drawer into the cabinet body.

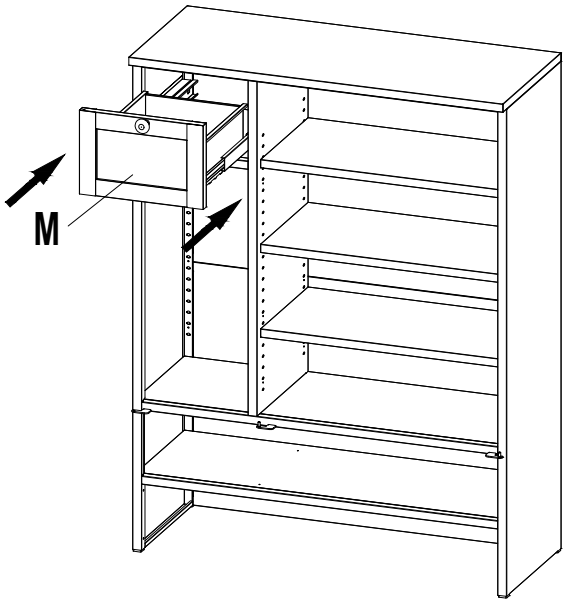

Step20

Use 3 accessories ④ fix the accessories ② (handle) to the door panels J, H, and I.

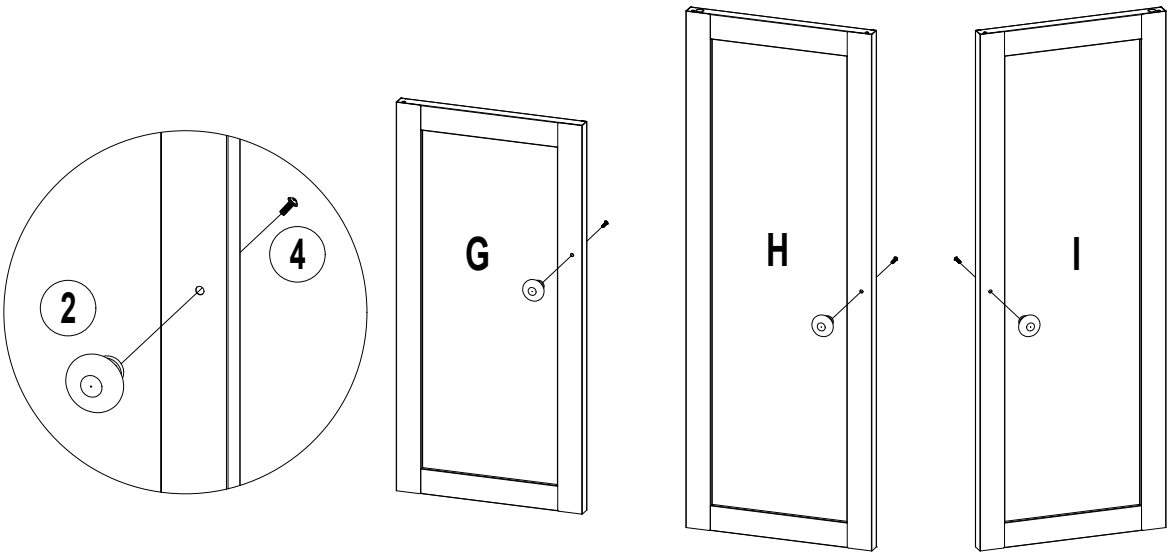

②	④
×3	M4*22 ×3

Step21

Fix the 2 accessories ⑮ to the round holes at the top of the door panels H and I.

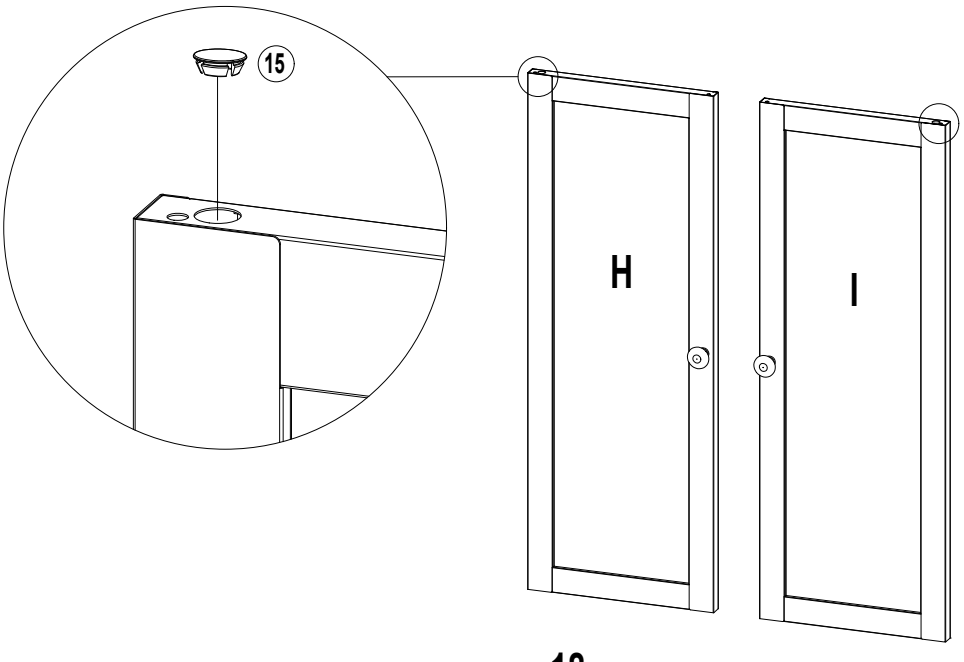

⑮
×2

Step22

Fix the 2 accessories ⑦ to the F door axle.

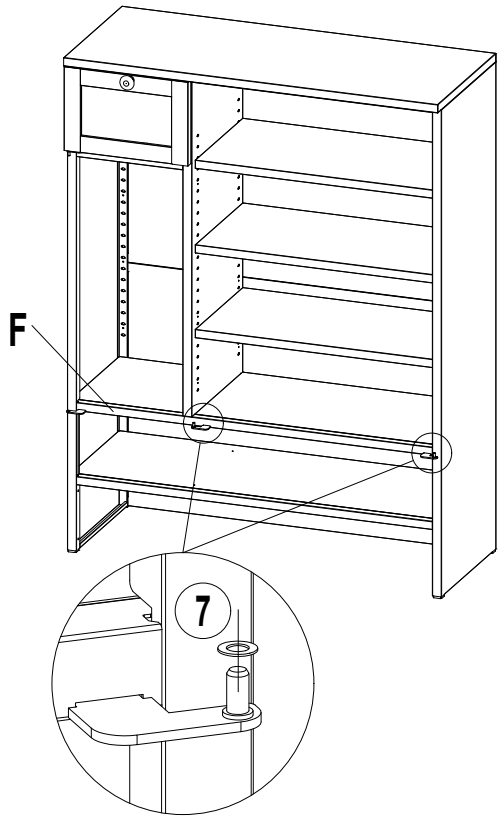

⑦
M5.2 ×2

Step23

Fix the reserved hole at the bottom of the door panel I to the F door axle gasket, press the spring loaded door shaft at the top of the door so that the top coincides with the reserved hole in the top panel D, and then release it.

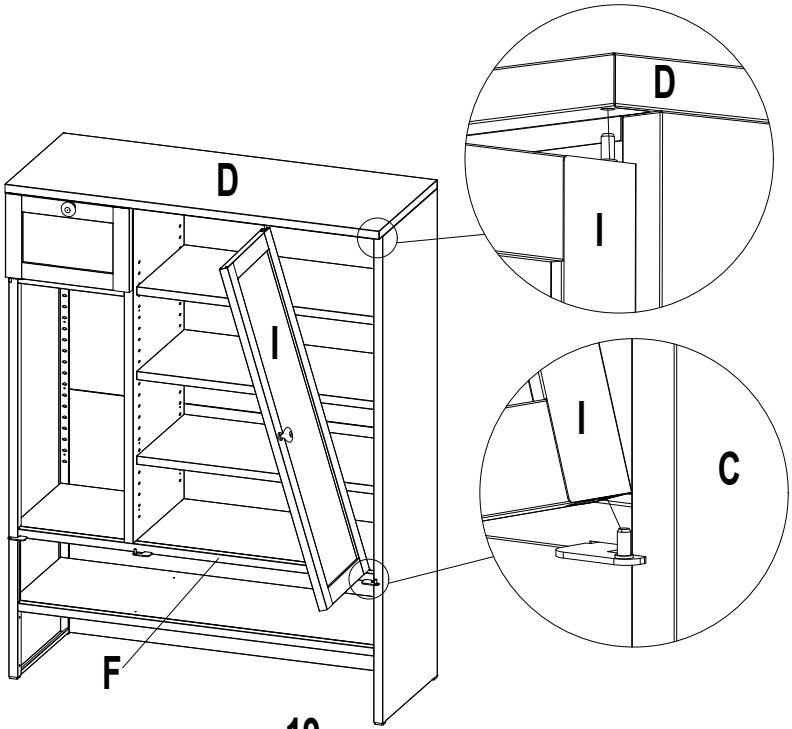

Step24

Fix the reserved hole at the bottom of the door panel H to the F door axle gasket, press the spring loaded door shaft at the top of the door so that the top coincides with the reserved hole in the top panel D, and then release it.

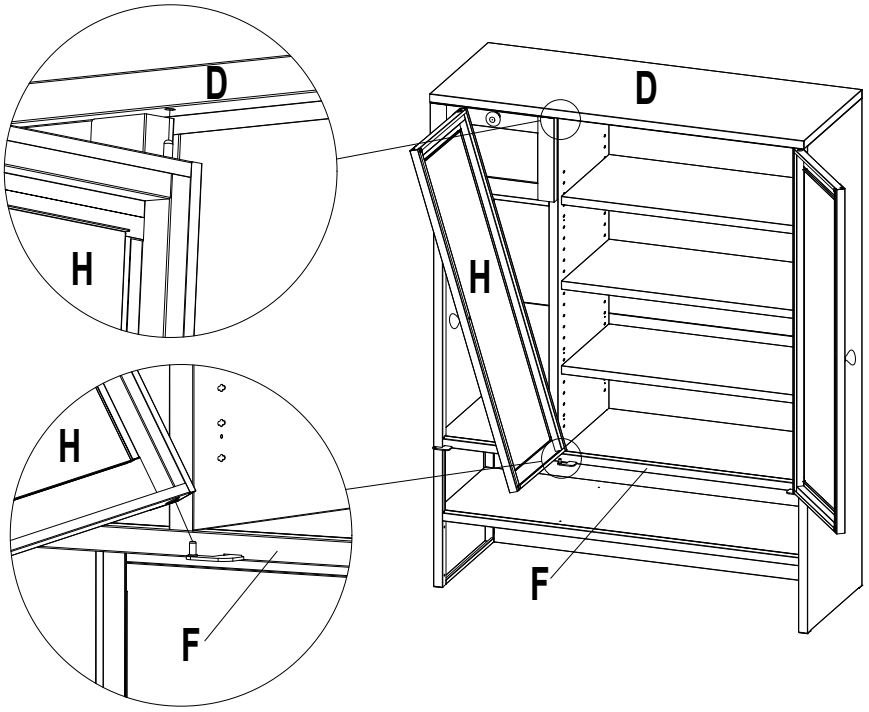

Step25

Press the spring-loaded door axle at the bottom of door panel G to coincide with the hole reserved for F, then release.

Fix the accessories ⑦ to L, and fix the holes in the upper part of the door panel G to the L door axle gasket.

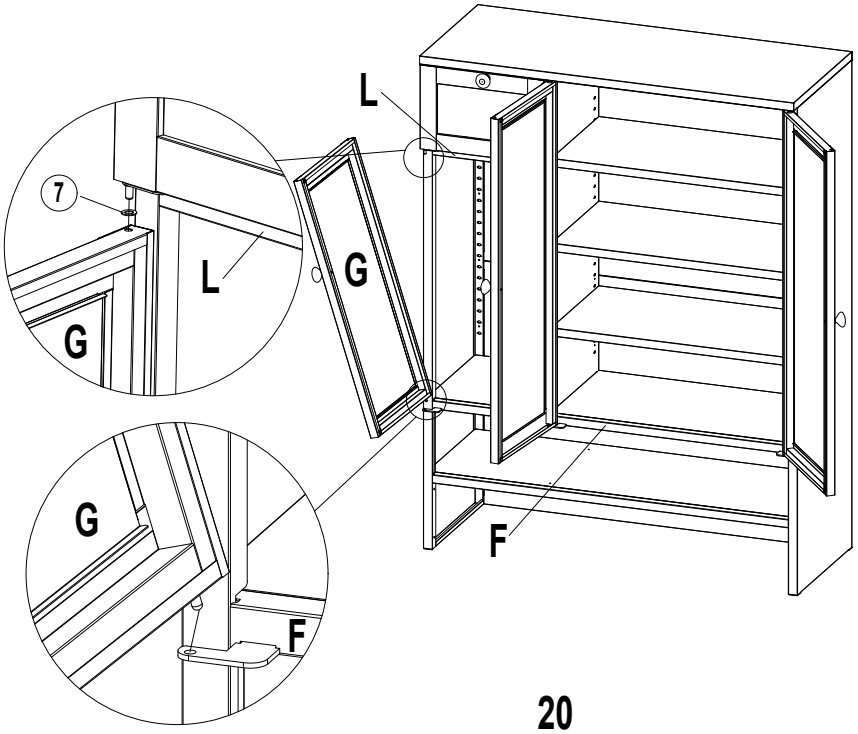

⑦



M5.2
×1

Step26

Fix the 6 accessories ⑭ (magnetic clasps) to the door panels G, H, and I.

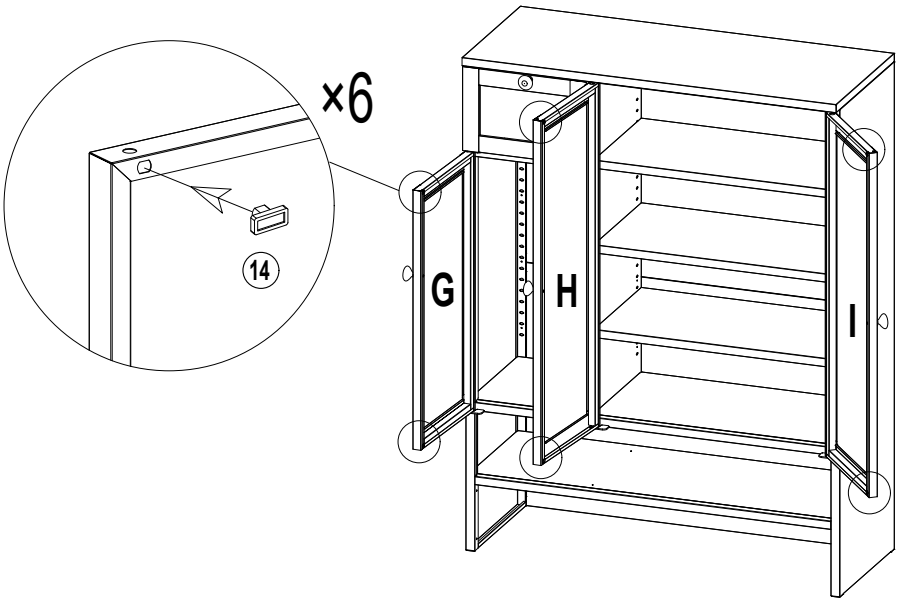

⑭

×6

Step27

Fix the 4 accessories ⑧ to the side panels B and C.

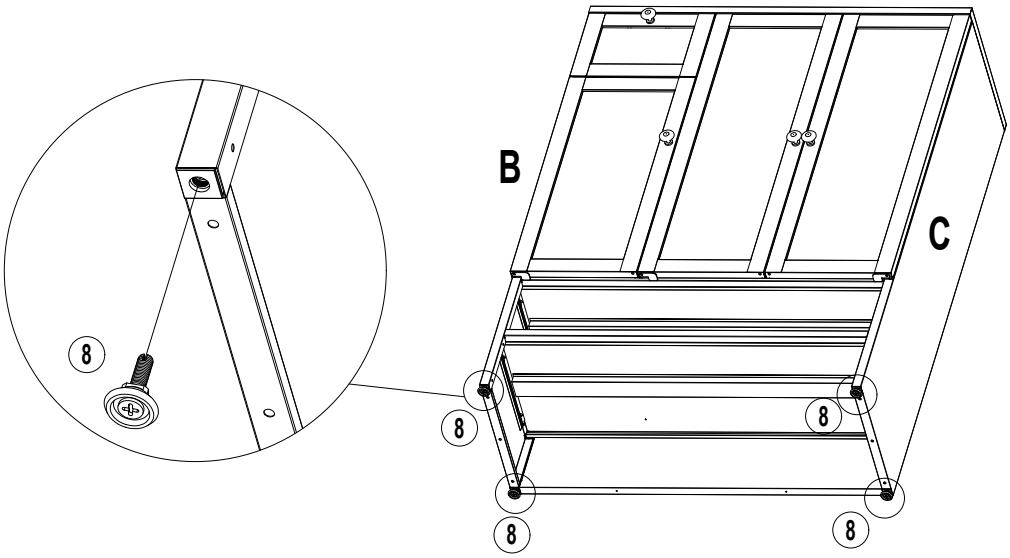

⑧

×4

Step28

After assembly, be sure to place the cabinet against the wall, and use 2 accessories ⑫ to fix the accessories ⑨ and the top panel D. Fix the cabinet to the wall with 2 fittings ⑩ and ⑪, ensure security.

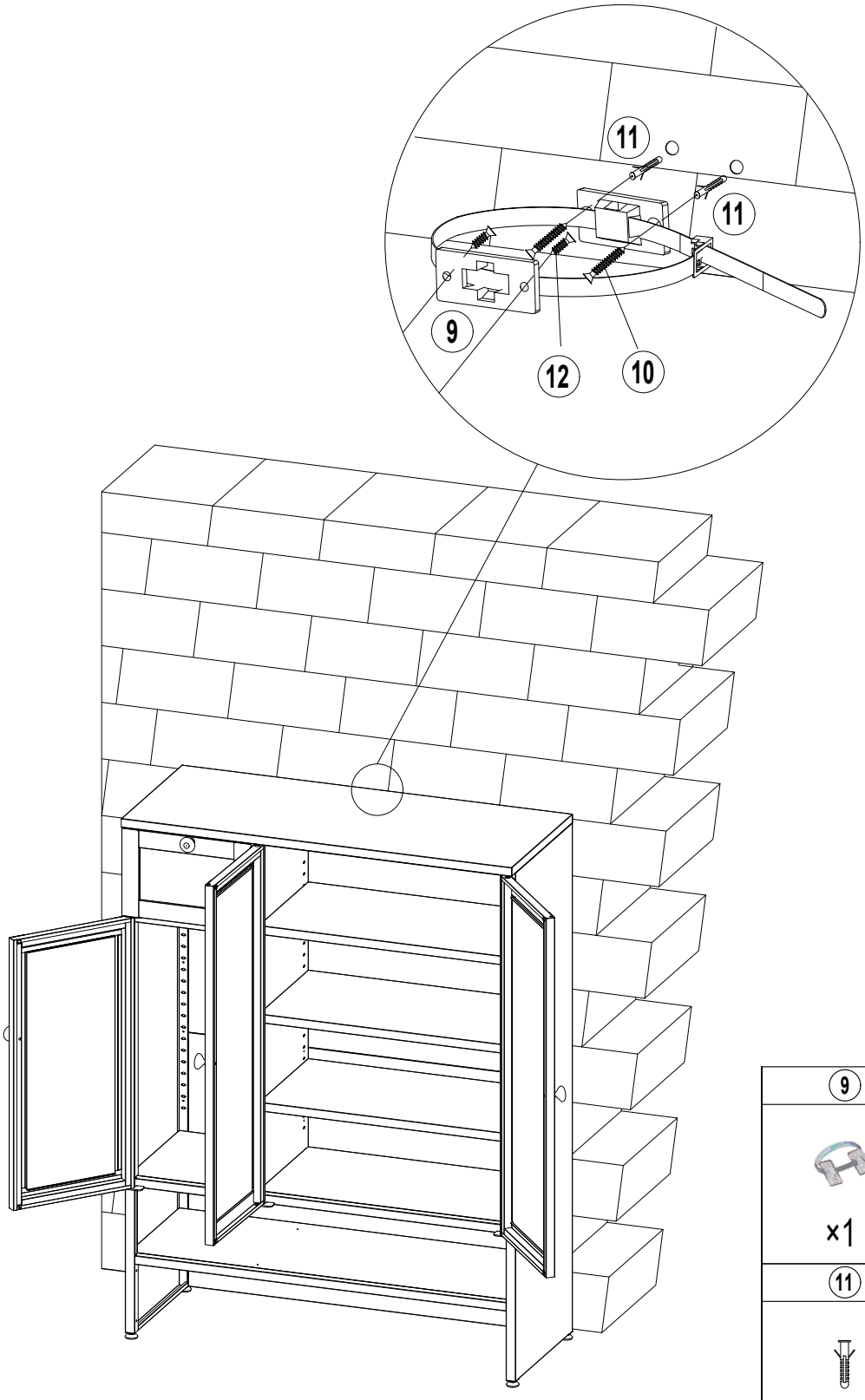

⑨	⑩
×1	 M4.2*32 ×2
⑪	⑫
×2	 M4*10 ×2