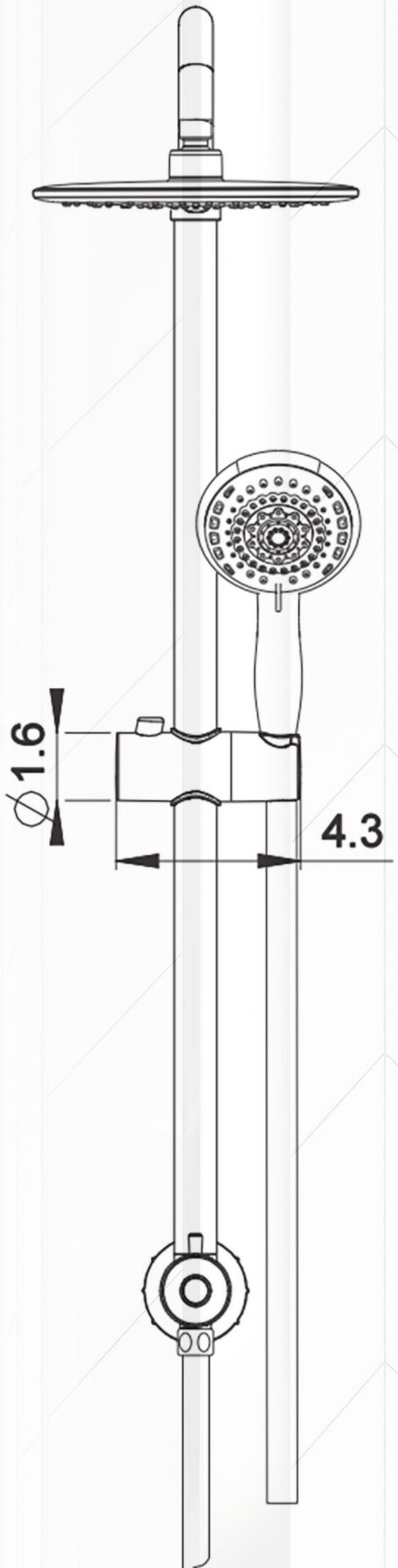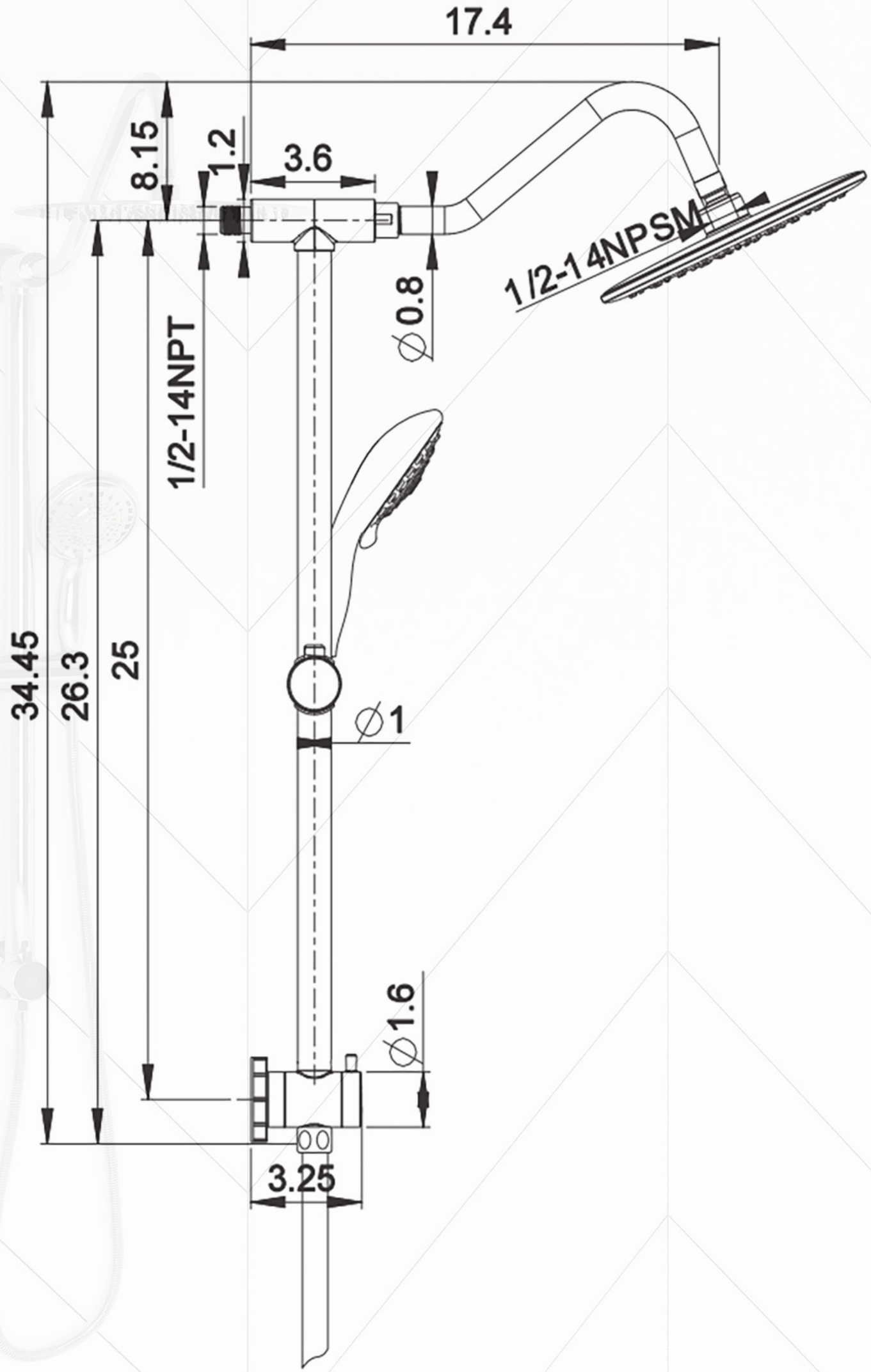Product Dimension