Assembly Instructions

CM3319L-SC-2PK

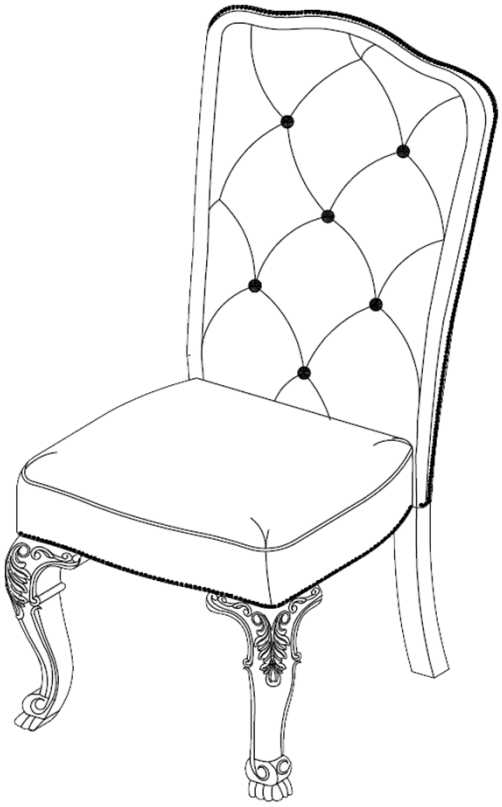

ASSEMBLY RATING

The Assembly Rating is a 5-point system that shows the degree of effort needed in assembling a specific product (with 1 being easy and 5 being difficult). For some products, two persons are recommended.

EASY DIFFICULT

Tools Required for Assembly:

Allen Wrench 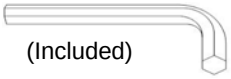 (Included)

ASSEMBLY & CARE ADVICE

FOR YOUR FURNITURE TO LAST, CORRECT ASSEMBLY AND PROPER MAINTENANCE ARE NECESSARY.
PLEASE FOLLOW THE INFORMATION PROVIDED BELOW TO FULLY ENJOY YOUR FURNITURE.

BASIC ASSEMBLY TECHNIQUES

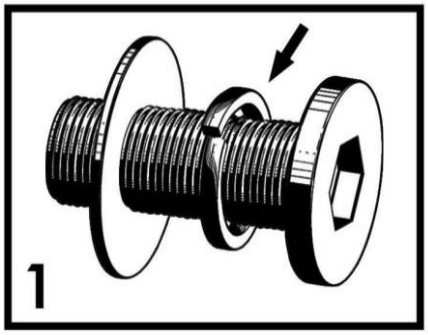

When lock or spring washer is used in an assembly, please make sure the lock or spring washer is placed between the larger flat washer and the head of the screw or bolt.

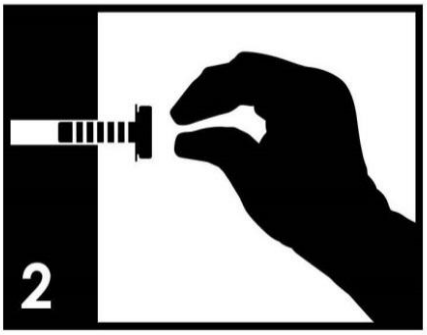

Position each part correctly and insert screws or bolts into their respective holes by hand tighten or using the proper hand tool. Only tighten when step is completed or when instructed to do so.

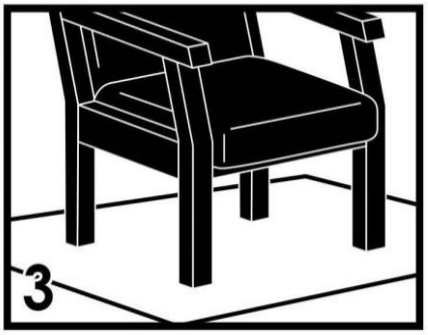

Use cardboard or carpet area when assembling furniture to prevent scratches . Make sure the furniture rests on a flat and level surface with each leg evenly touching the floor.

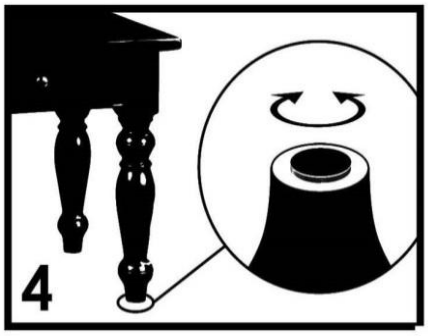

Some furniture comes with height adjustment knobs underneath each leg. To lower or to raise each leg, you need to turn clockwise or counterclockwise, respectively.

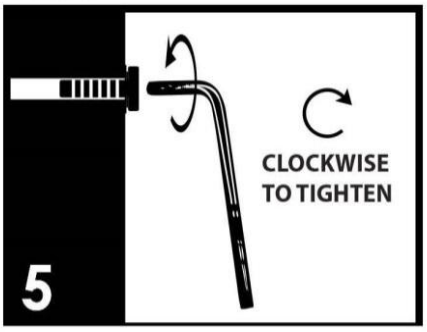

Make sure all parts are properly aligned, then use the appropriate hand tool to completely tighten the bolts or screws. Do not use power tools and do not overtighten.

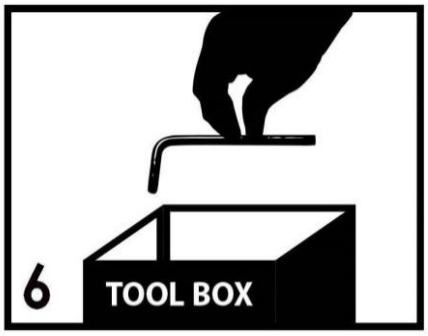

Save the instructions and store the Allen wrench or any supplied tool for later maintenance. After two weeks, check and tighten any loose hardware and repeat again every six months thereafter.

IT IS THE USER'S RESPONSIBILITY TO MAINTAIN THE FURNITURE. THE HARDWARE MAY LOOSEN OVER TIME AND MAY CAUSE THE FURNITURE TO BE WOBBLY AND UNABLE TO SUPPORT ITS INTENDED WEIGHT CAPACITY. THIS MAY LEAD TO COLLAPSE AND MAY CAUSE SERIOUS INJURY.

FAILURE TO FOLLOW THE GUIDELINES ABOVE MAY RESULT IN INJURY AND/OR PROPERTY DAMAGE.

FURNITURE OF AMERICA. ALL RIGHTS RESERVED.

MD

Before you begin, please read Page 2 of “Assembly and Care Advice”.

And remember, do not tighten until each step is completed or instructed.

Parts List

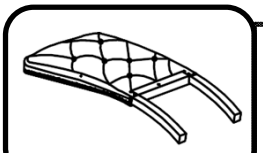

#1 x 1 pc x 2
Backrest w/Legs

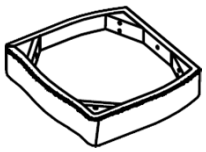

#2 x 1 pc x 2
Seat

#3 x 2 pcs x 2
Front Leg

X 2

Hardware List

#A x 4 pcs x 2
Bolt 5/16”x3”

#B x 4 pcs x 2
Bolt 5/16”x2-3/4”

#C x 1 pc x 2
Bolt 5/16”x1-3/8”

#D x 9 pcs x 2
Lock Washer

#E x 9 pcs x 2
Flat Washer

#F x 1 pc
Allen Wrench

Note: The above parts and hardware are shown for a complete assembly of ONE chair. However, the actual parts and hardware (with an exception of the Allen wrench) in the box will be twice the quantities listed to include the assembly of the second chair.

#A x 4 pcs
#D x 4 pcs
#E x 4 pcs

I. Align the seat (#2) with the pre-drilled holes of the backrest with legs (#1).

II. Prepare 4 bolt assemblies by inserting FIRST the lock washer (#D) onto the bolt (#A) and then the flat washer (#E) onto the SAME bolt (#A), in that order.

III. Insert the bolt assemblies through the pre-drilled holes in the corners of the seat (#2) and secure those bolts using the Allen wrench (#F) to lock them in with the backrest with legs (#1).

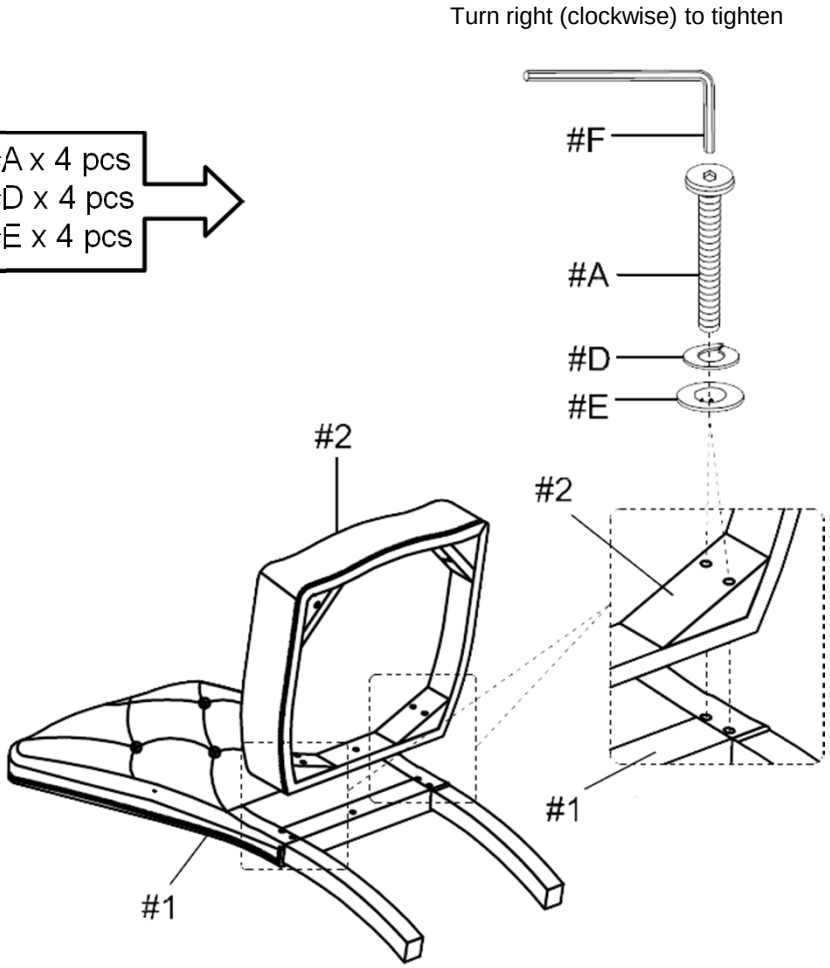

I. Prepare a bolt assembly by inserting FIRST the lock washer (#D) onto the bolt (#C) and then the flat washer (#E) onto the SAME bolt (#C), in that order.

II. Insert the bolt assemblies through the center hole of the seat (#2) and secure that bolt using the Allen wrench (#F) to lock it in with the backrest with legs (#1).

#C x 1 pc
#D x 1 pc
#E x 1 pc

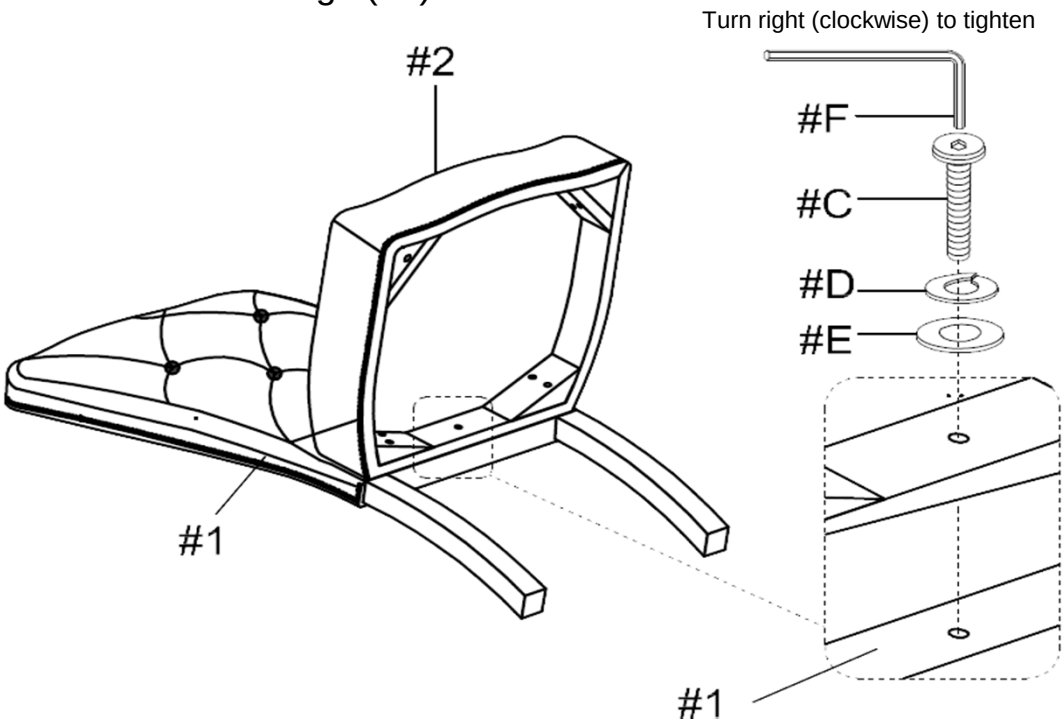

#B x 4 pcs
#D x 4 pcs
#E x 4 pcs

I. Align the front legs (#3) with the pre-drilled holes on the corners of the seat (#2).

II. Prepare 4 bolt assemblies by inserting FIRST the lock washer (#D) onto the bolt (#B) and then the flat washer (#E) onto the SAME bolt (#B), in that order.

III. Insert the bolt assemblies through the pre-drilled holes in the corners of the seat (#2) and secure those bolts using the Allen wrench (#F) to lock them in with the front legs (#3).

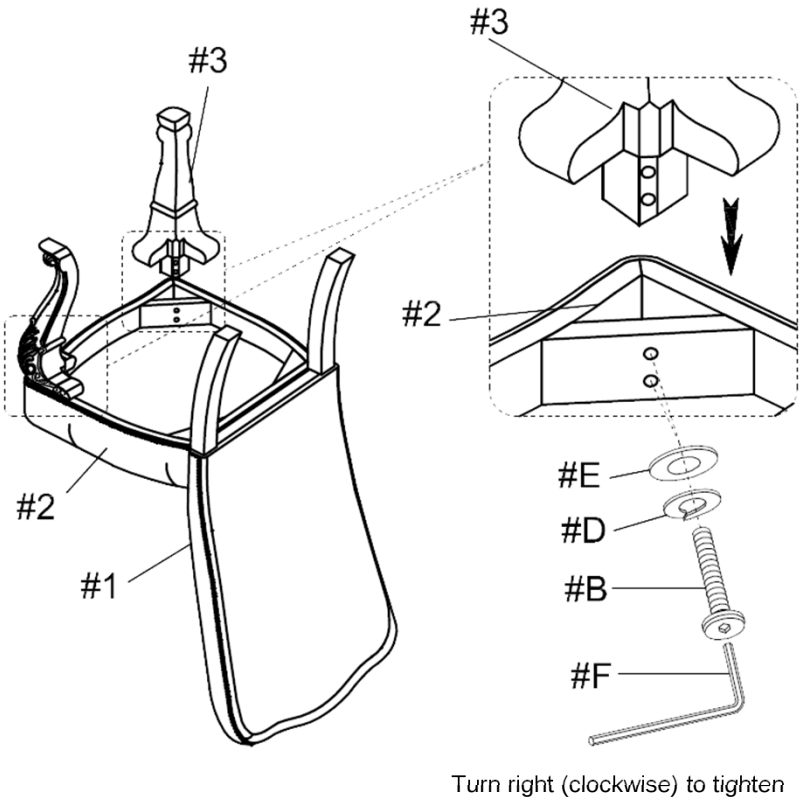

Carefully turn the completed chair upright. Make sure the chair is rested on a flat surface and it does not feel loose or wobbly. If it does, double check that the bolts are secured and properly tighten.

ASSEMBLE EVERYTHING EXACTLY THE SAME FOR THE SECOND CHAIR.