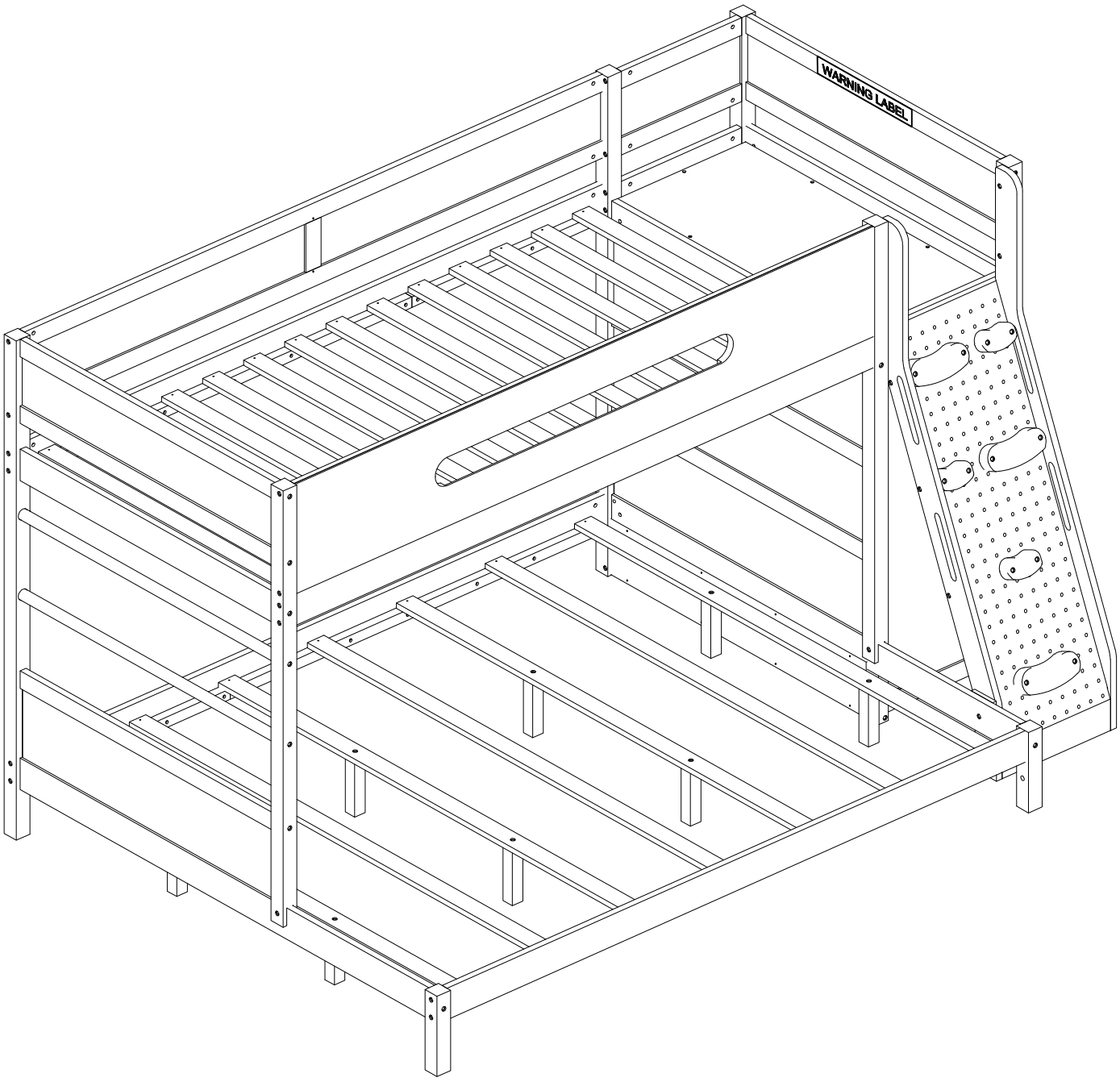
ASSEMBLY INSTRUCTION



SAFETY WARNING

1. This bed is designed for use only mattress (es) meeting the following specifications on the upper bunk:

Upper bunk (bunk bed and tribed included)

Bed type	Length	Width	Thickness
Twin XL Standard	80"	38"	6" max

Lower bunk

Bed type	Length	Width	Thickness
Queen Standard	80"	60"	8" max

2. Replacement parts, including additional guardrails, maybe obtained from any of our dealers.

3. Follow the information on the warnings appearing on the upper bunk bed end structure and on the carton. Do not remove warning label from bed.

4. Always use the recommended size mattresses or mattress supports, or both, to help prevent the likelihood of entrapment or falls.

5. Surface of mattress must be at least 5" (127mm) below the upper edge of guardrails.

6. Do not allow children under 6 years of age to use the upper bunk.

7. Periodically check and ensure that the guardrail, ladder, and other components are in their proper position, free from damage, and that all connectors are tight.

8. Do not allow horseplay on or under the bed and prohibit jumping on the bed.

9. Always use the ladder for entering and leaving the upper bunk.

10. Do not use substitute part. Contact the manufacture or dealer for replacement part.

11. Use of a night light may provide added safety precaution for a child using the upper bunk.

12. Always use guardrails on both long sides of the upper bunk. If the bunk bed will be placed next to the wall, the guardrail that runs the full length of the bed should be placed against the wall to prevent entrapment between the bed and wall.

13. The use of water or sleep flotation mattresses is prohibited.

14. STRANGULATION HAZARD - Never attach or hang items to any part of the bunk bed that are not designed for use with the bed; for example, but not limited to, hook, belts and jump ropes.

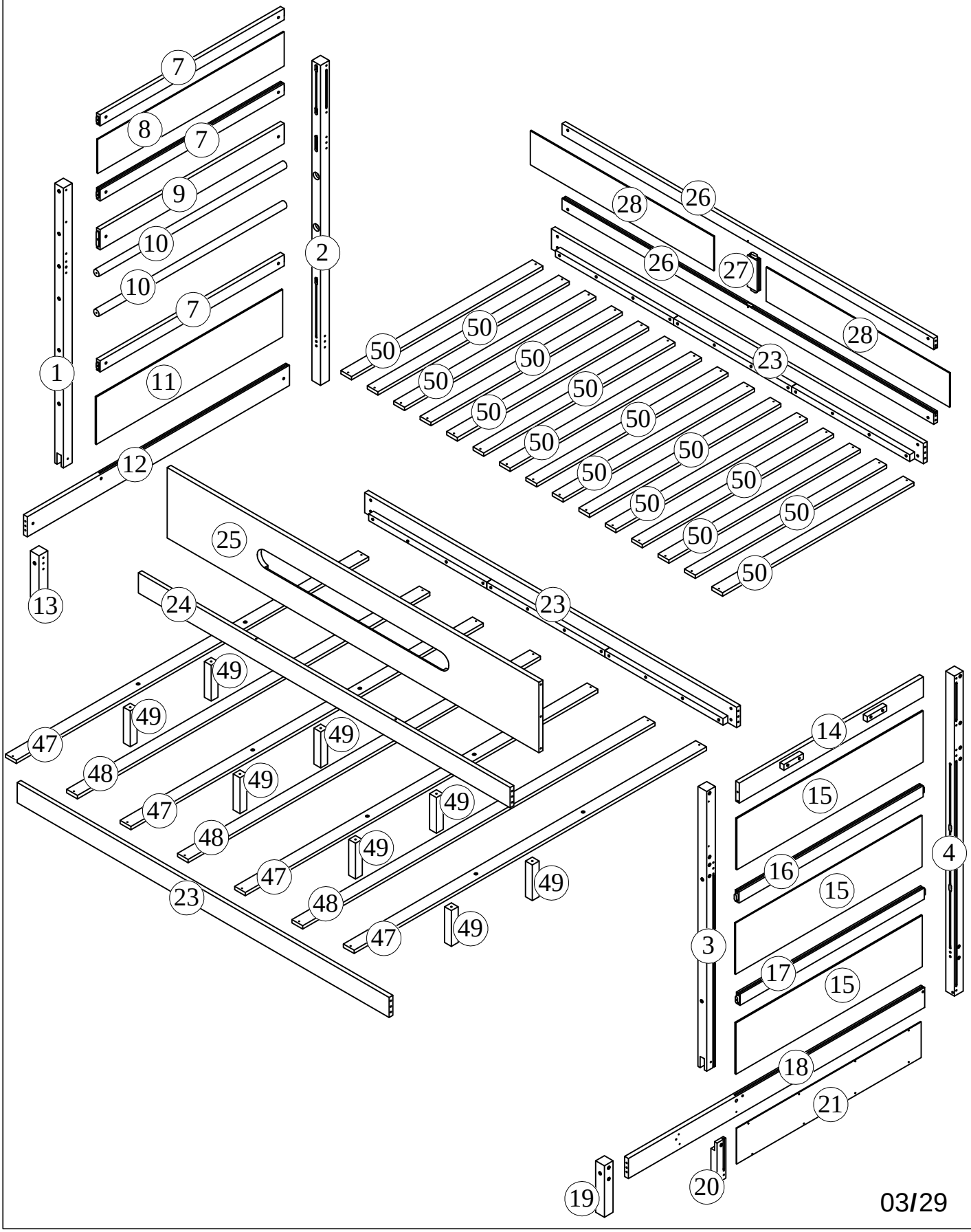
15. Keep these instruction for future reference.

16. Prohibit more than one person on upper bunk

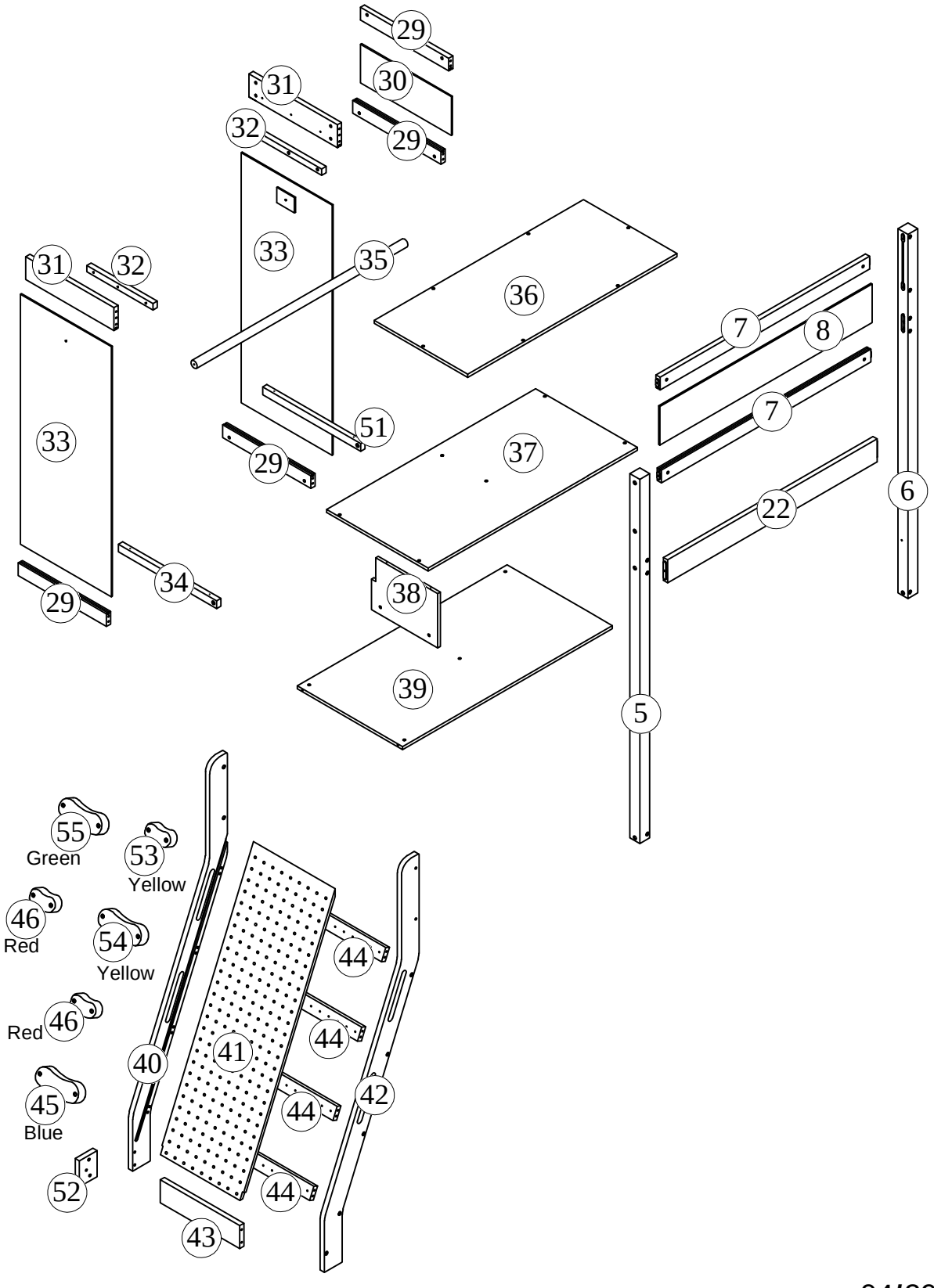
17. We recommend assembling your bunk bed on the shipping carton to protect your floor or carpet.

18. Be certain all staples are out of the box before beginning assembly on the shipping carton.

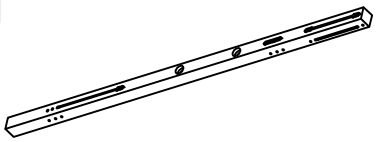
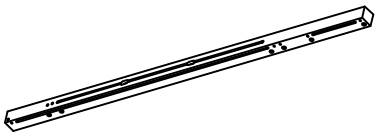
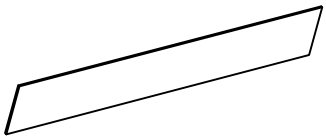
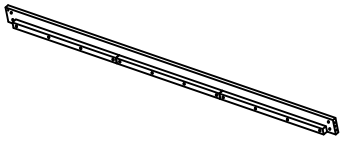
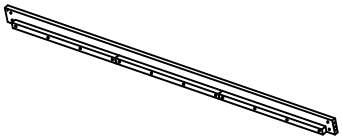
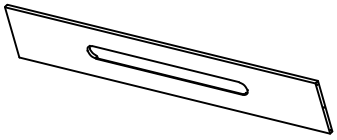
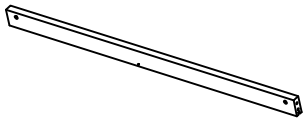
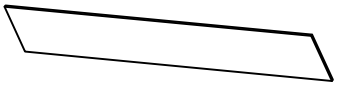
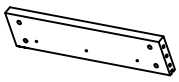
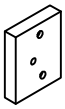
ASSEMBLY INSTRUCTION



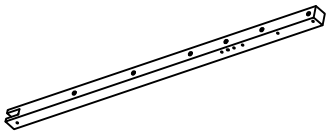
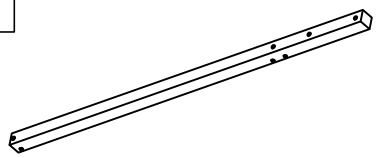
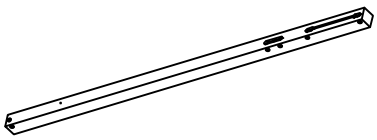
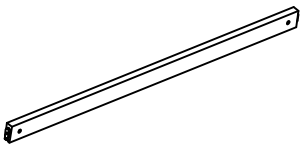
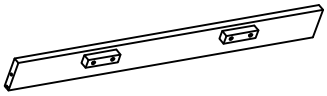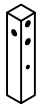
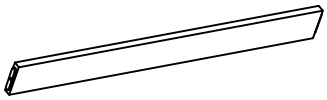
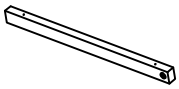
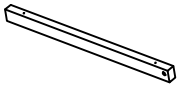
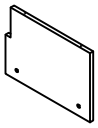
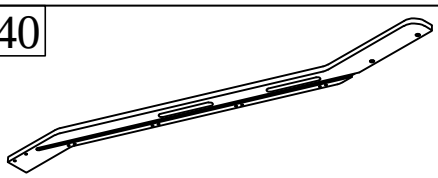
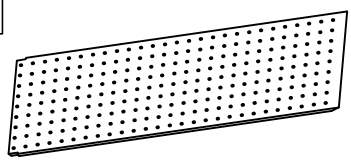
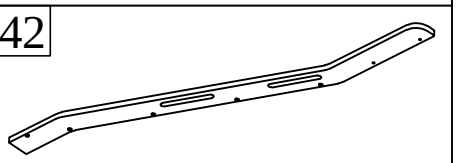
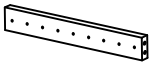
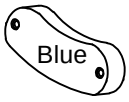
ASSEMBLY INSTRUCTION
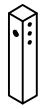


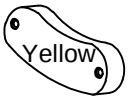
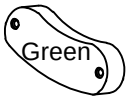
Part List (Box 1/3)

2  Left leg of back side - 1pc	4  Middle leg of back side - 1pc	8  Upper hip panel -2pcs
10  Left round bar - 2pcs	20  Middle leg of front side - 1pc	23  Rail side - 3pcs
24  Rail side - 1pc	25  Front railing -1pc	26  Rear railing -2pcs
27  Stand behind-1pc	28  Rear side rail panel -2pcs	31  Side of the cabinet -2pcs
35  Hanging frame - 1pc	52  Stair cushions - 1pc	

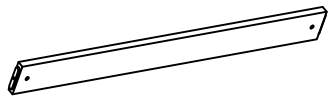
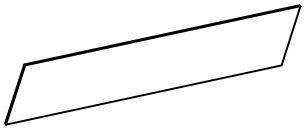
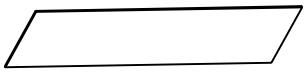
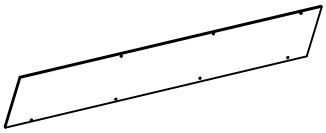
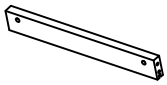
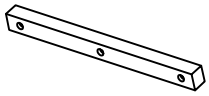
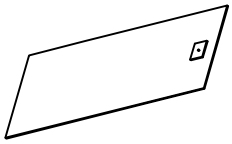
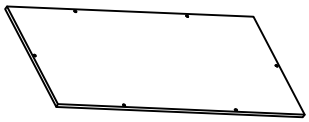
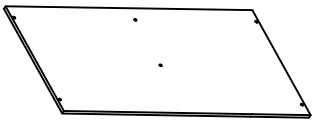
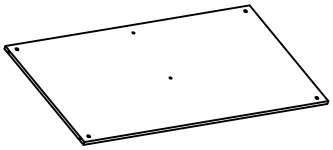
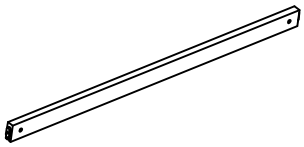
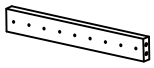
Part List (Box 2/3)-Hardware in box

1  Left leg of front side - 1pc	3  Middle leg of front side - 1pc	5  Right leg of front side - 1pc
6  Right leg of back side - 1pc	7  Upper Horizontal hip bar - 4pcs	12  Lower left hip bar -1pc
14  Upper Horizontal hip bar - 1pc	16  Middle right hip bar - 1pc	17  Middle right hip bar - 1pc
18  Lower right hip bar - 1pc	19  Right leg of front side - 1pc	22  In front of the lower cabinet-1pc
34  Supports the side shelf-1pc	51  Supports the side shelf-1pc	38  Partition plate-1pc
40  Stairs vertical-left - 1pc	41  Top panel - slide - 1pc	42  Stairs vertical-right - 1pc
44  Support slide - 3pcs	45  Stairs bar - 1pc	

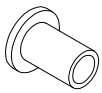
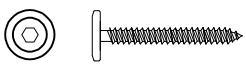
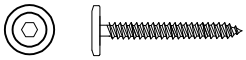
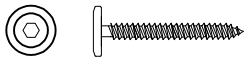
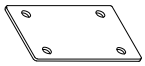
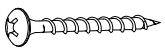
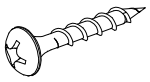
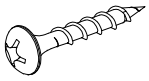
Part List (Box 2/3)-Hardware in box

13  Left leg of front side - 1pc	46  Stairs bar - 2pcs	47  Slats - 4pcs
48  Slats - 3pcs	49  Slats support -8pcs	53  Stairs bar - 1pc
54  Stairs bar - 1pc	55  Stairs bar - 1pc	

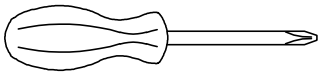
Part List (Box 3/3)

9  Middle left hip bar -1pc	11  Lower left hip panel -1pcs	15  Lower right hip panel- 3pc
21  Cabinet backboard -1pc	29  Side of the cabinet -4pcs	30  Upper cabinet side panel-1pc
32  Roof board support-2pcs	33  Lower cabinet side panel-2pcs	36  Cabinet roof top- 1pc
37  Shelf board - 1pc	39  Bottom - 1pc	7  Upper Horizontal hip bar - 1pc
43  Slide bar - 1pc	44  Support slide - 1pc	50  Slats - 15pcs

Hardware List

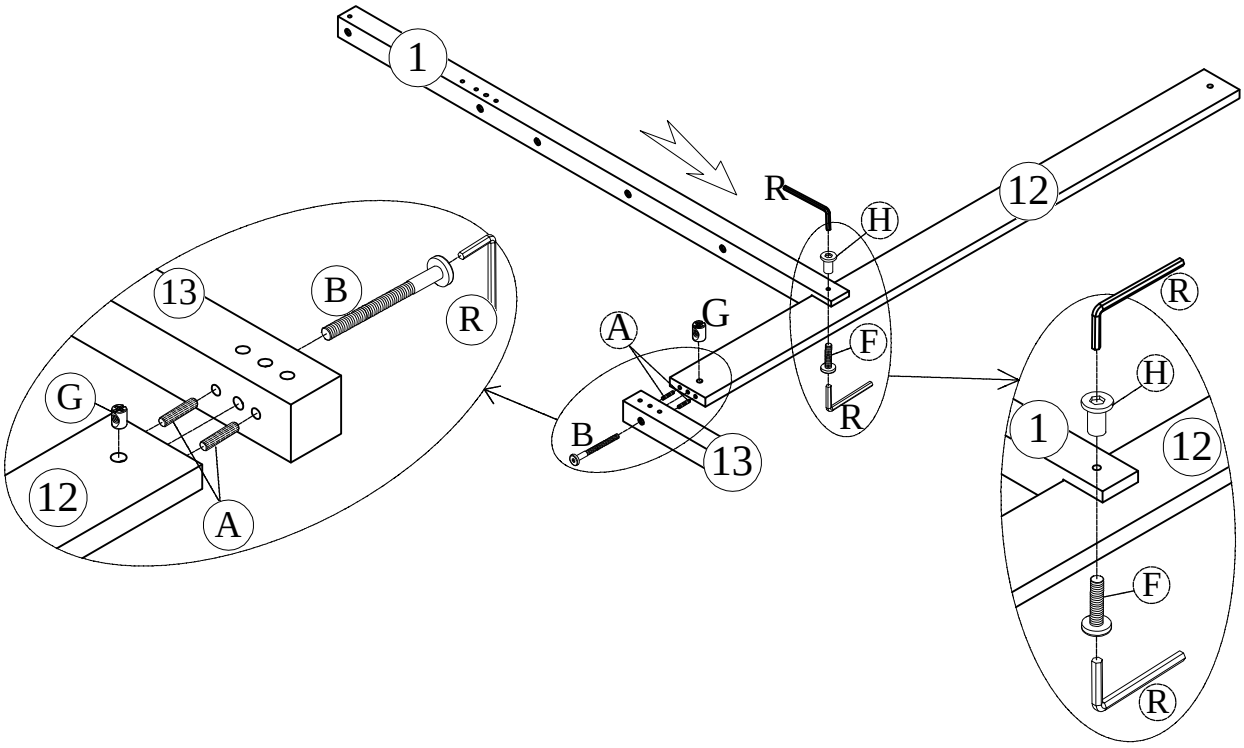
A  Ø8 x 30 mm Wood dowel-46pcs	B  D13 x Ø1/4" x 80 mm Hex-Head bolts-65pcs	C  D13 x Ø1/4" x 70 mm Hex-Head bolts-1pc
D  D13 x Ø1/4" x 60 mm Horizontal-Hole bolts-10pcs	E  D13 x Ø1/4" x 50 mm Horizontal-Hole bolts-2pcs	F  D13 x Ø1/4" x 35 mm Horizontal-Hole bolts-10pc
G  Horizontal - Hold bolts Ø1/4"x12 - 78pcs	H  Canopy head though / Ø1/4" x15 - 2pcs	I  Hexagonal bolts catch wood D13 x Ø1/4" * 50 - 16pcs
J  Hexagonal bolts catch wood D13 x Ø1/4" * 40 - 9pcs	L  Hexagonal bolts catch wood D13 x Ø1/4" * 30 - 2pcs	K  Hexagonal bolts catch wood D13 x Ø1/4" * 25 - 1pc
M  50 x 35x1.5 mm Straight Steel Panel-2pcs	N  M4 x 35 mm Wood Screws-44pcs	O  M4 x 30 mm Wood Screws-6pcs
P  M4 x 25 mm Wood Screws 14pcs	Q  M3.5 x 15 mm Wood Screws 18pcs	R  Allen Key 2pc

ASSEMBLY TOOLS REQUIRED (NOT INCLUDED)



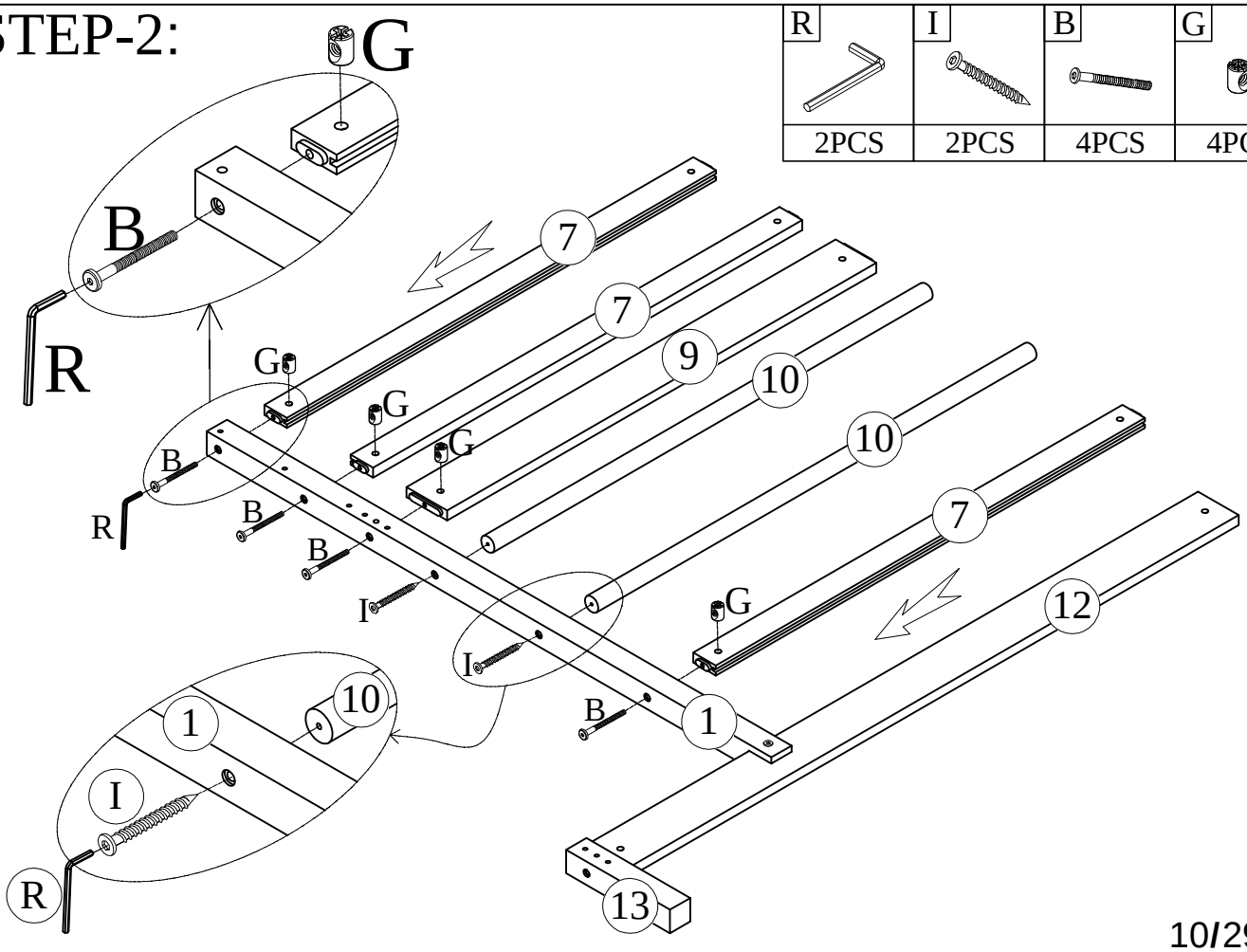
STEP-1:

R	F	H	A	B	G
2PCS	1PC	1PC	2PCS	1PC	1PC



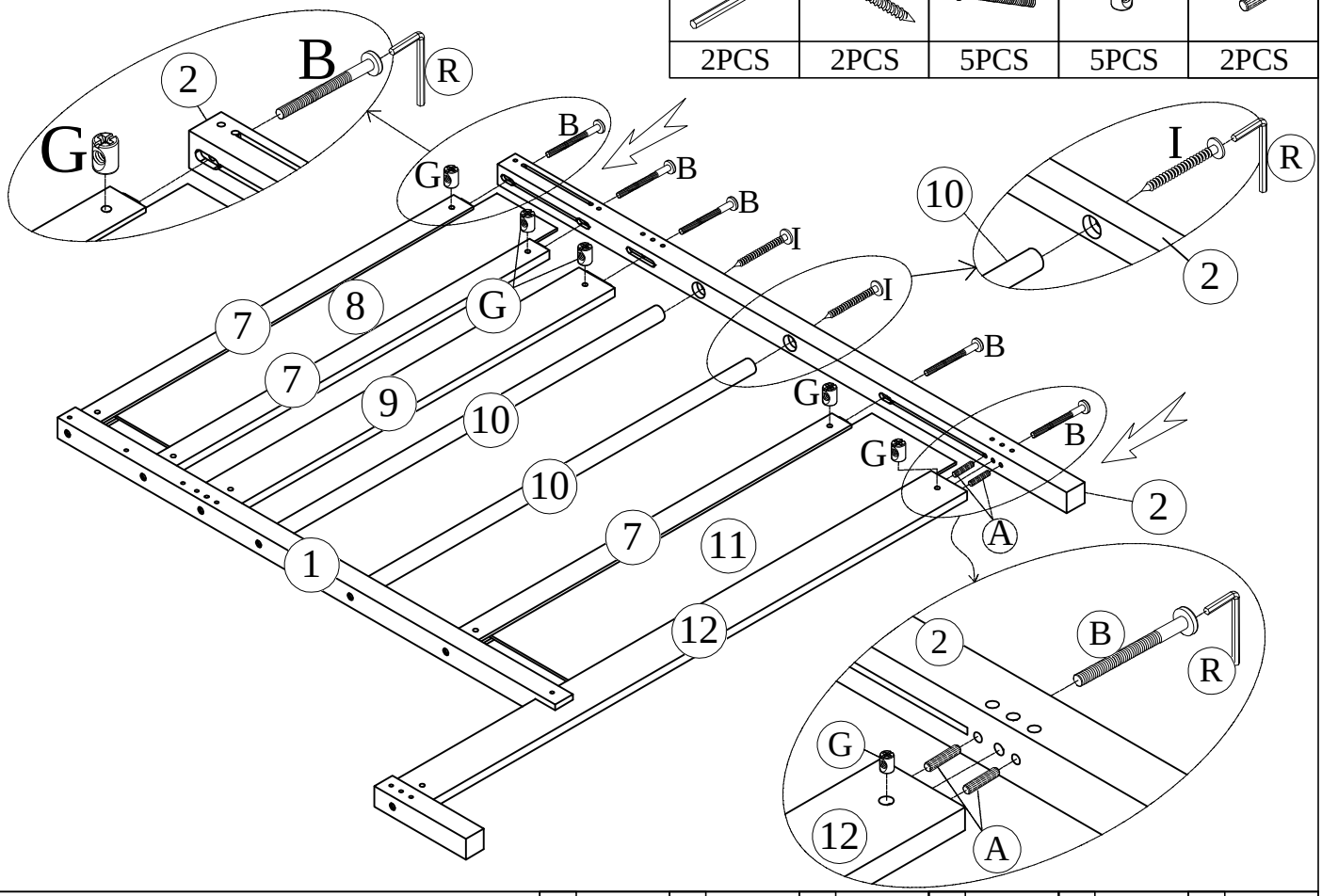
STEP-2:

R	I	B	G
2PCS	2PCS	4PCS	4PCS



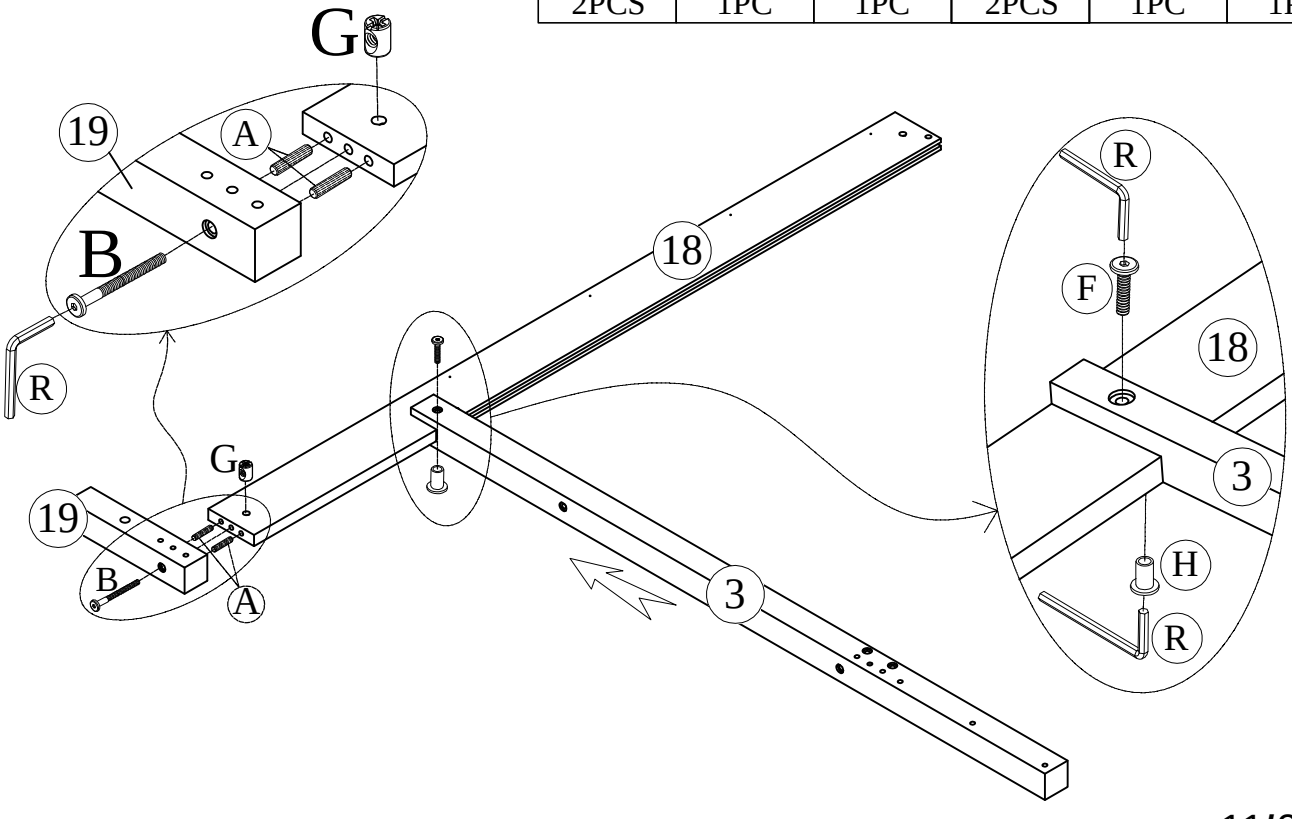
STEP-3:

R	I	B	G	A
2PCS	2PCS	5PCS	5PCS	2PCS



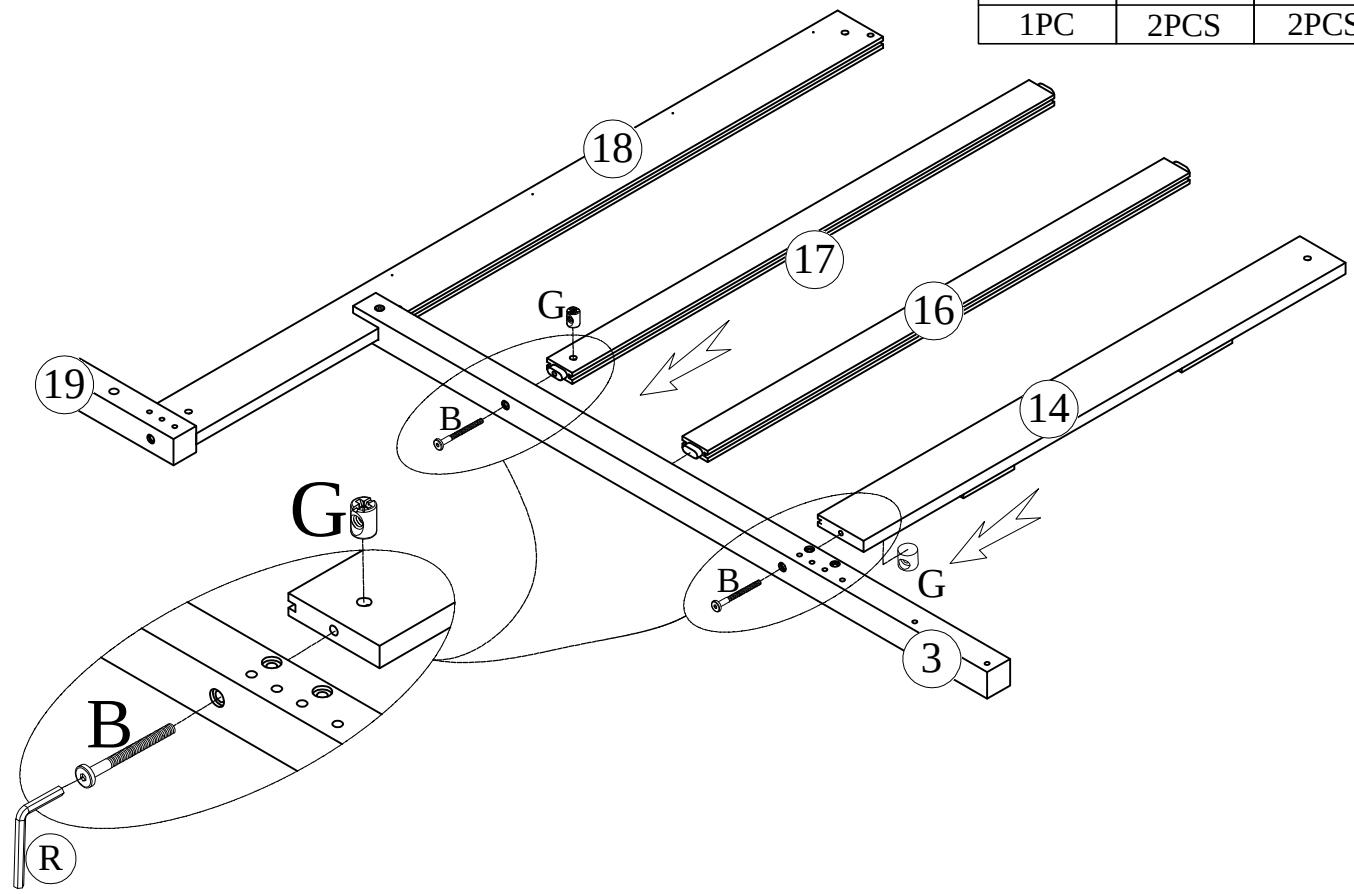
STEP-4:

R	F	H	A	B	G
2PCS	1PC	1PC	2PCS	1PC	1PC



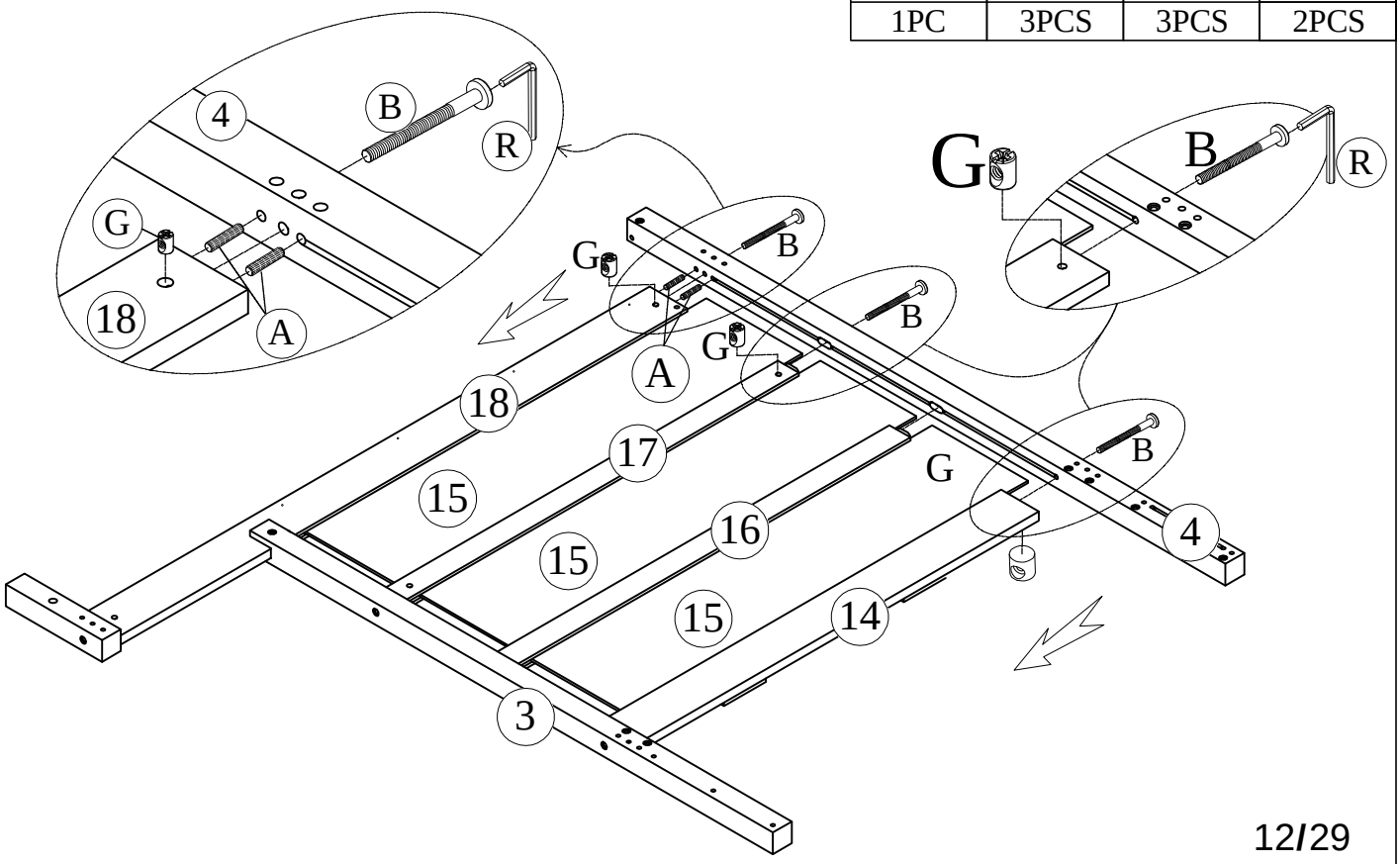
STEP-5:

R	B	G
1PC	2PCS	2PCS

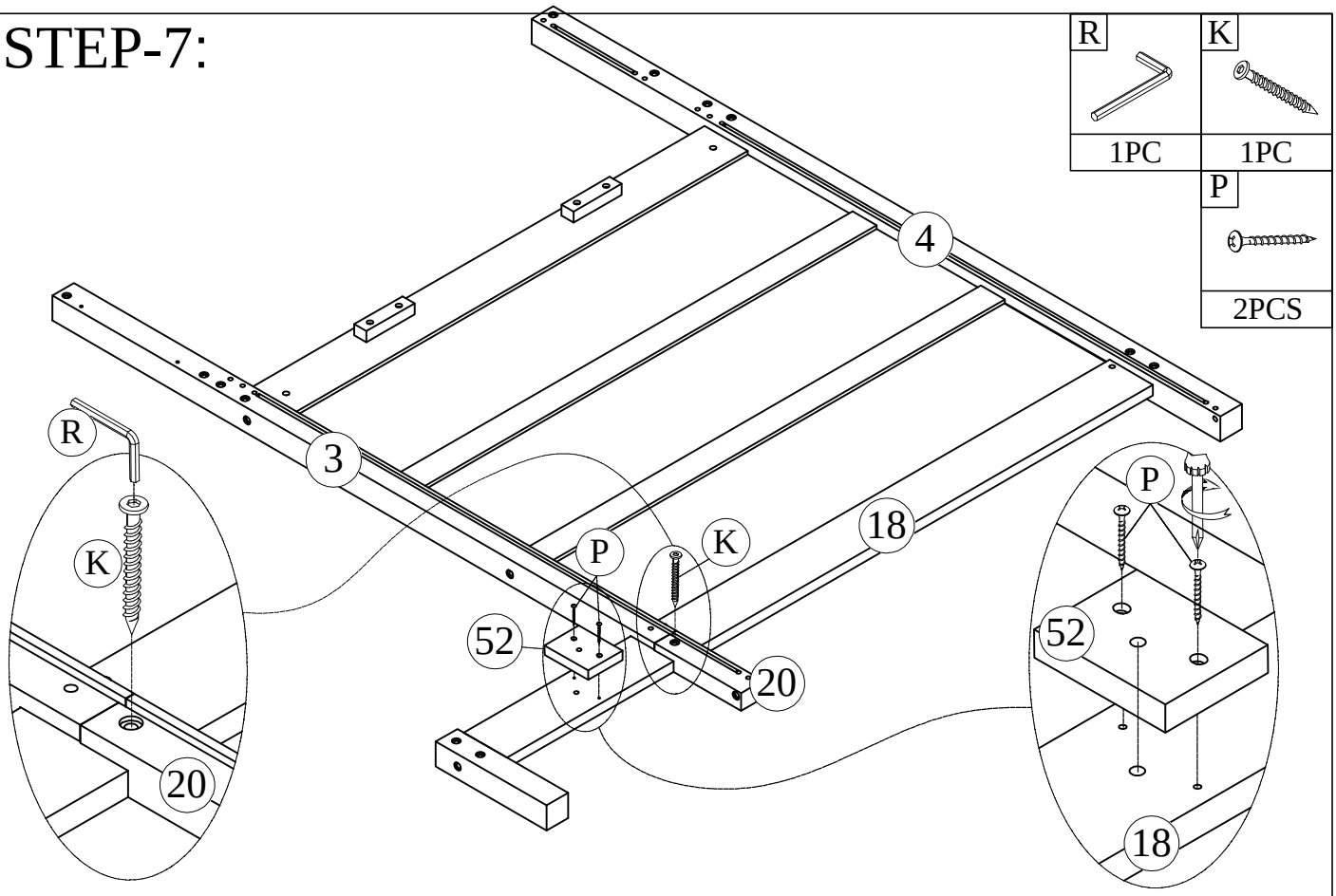


STEP-6:

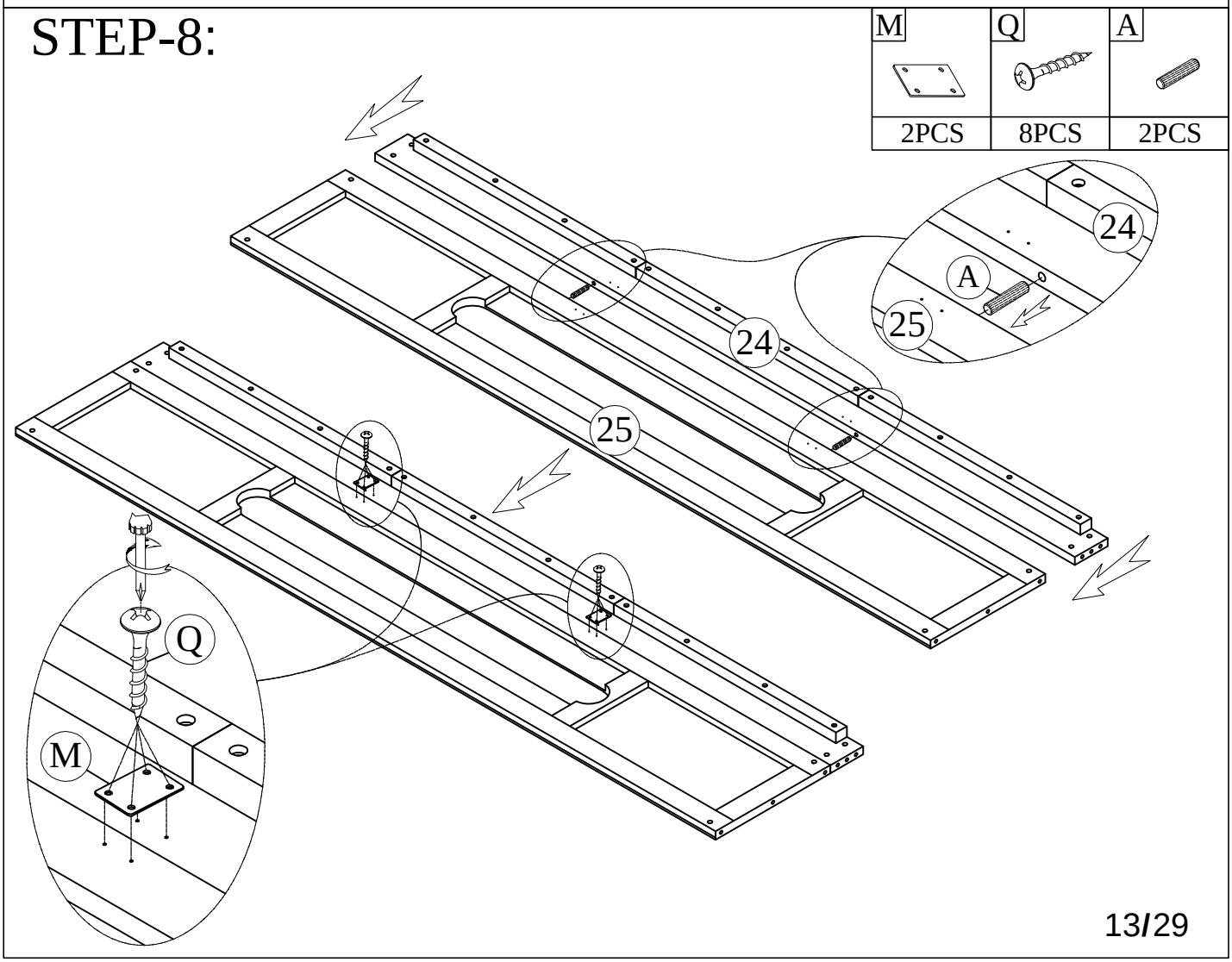
R	B	G	A
1PC	3PCS	3PCS	2PCS



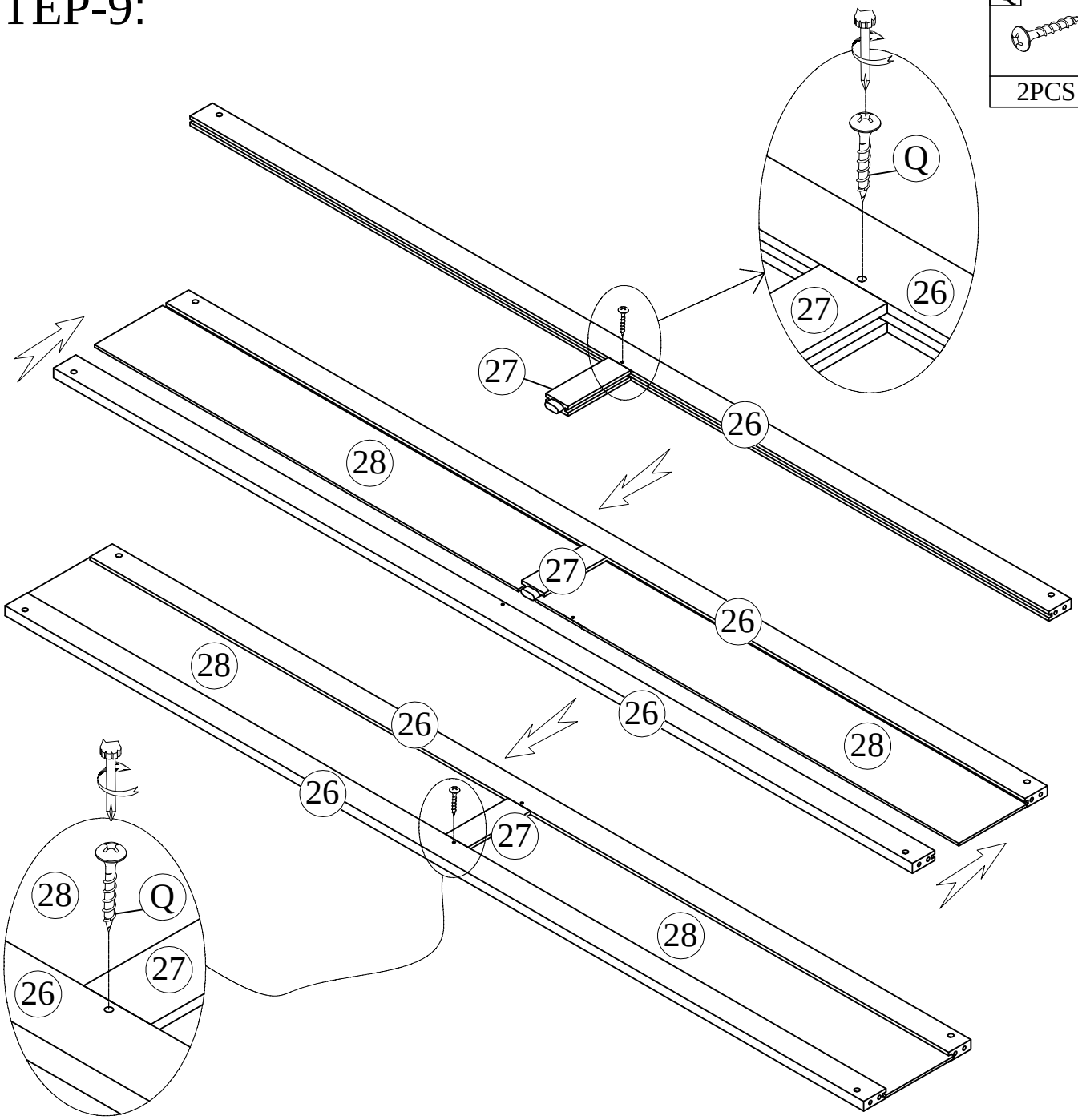
STEP-7:


R
1PC
K
1PC
P
2PCS
4
3
R
K
20
P
K
18
52
20
P
52
18

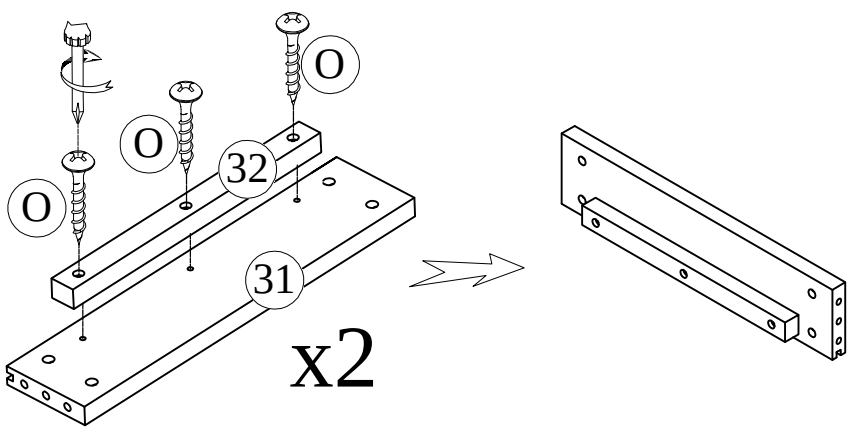
STEP-8:


M
2PCS
Q
8PCS
A
2PCS
24
A
25
24
25
Q
M

STEP-9:

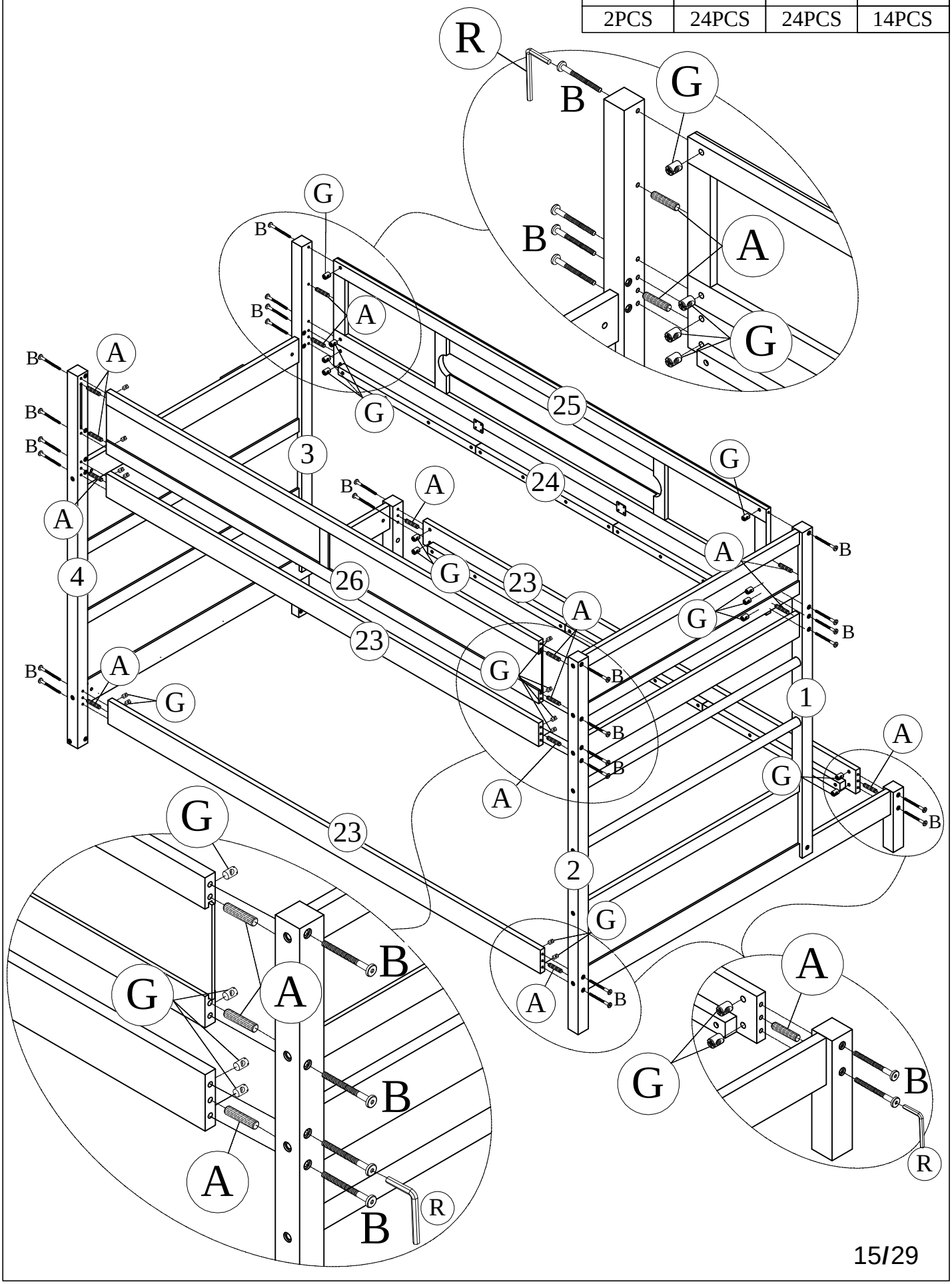


STEP-10:



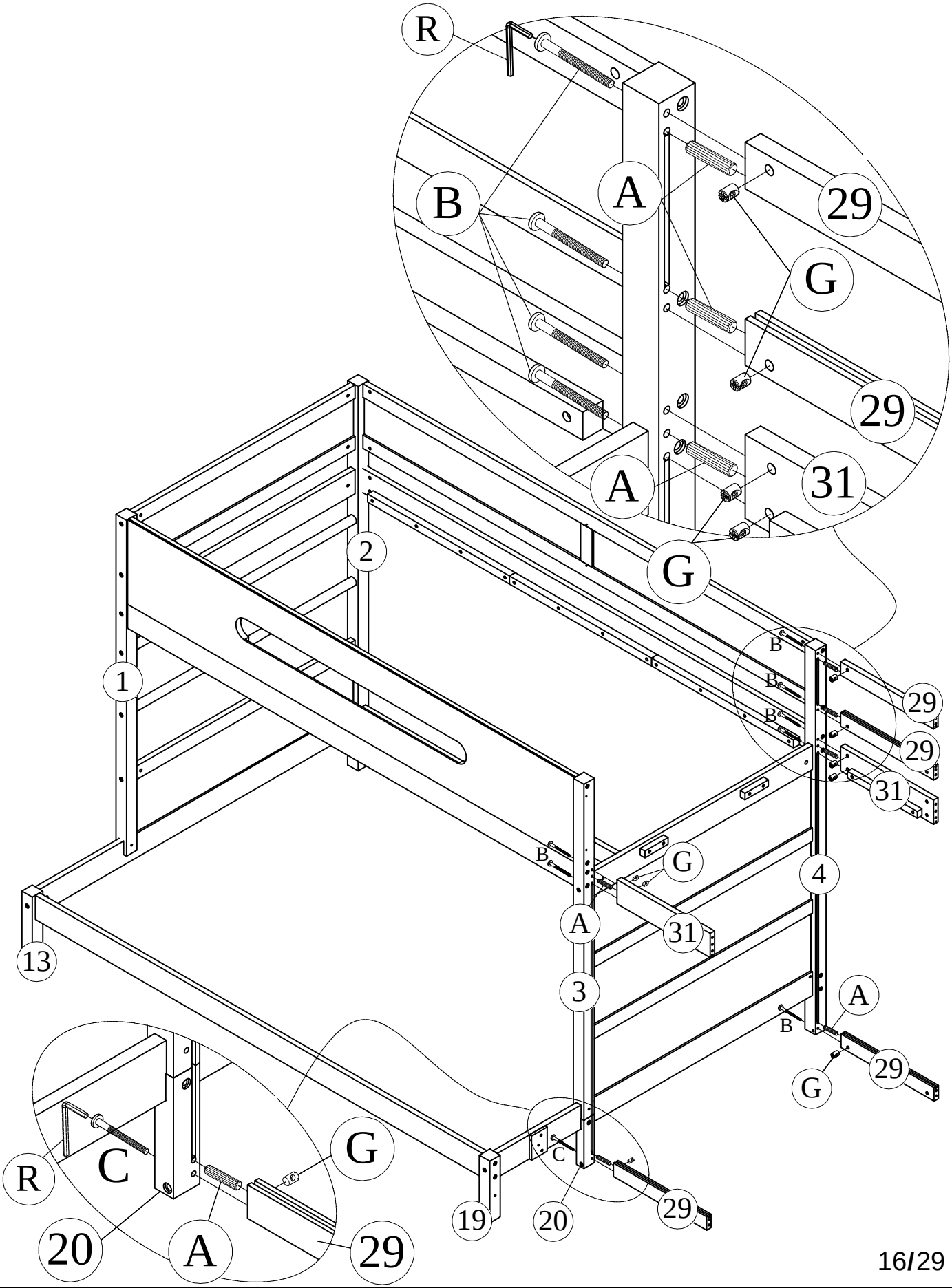
STEP-11:

R	B	G	A
2PCS	24PCS	24PCS	14PCS

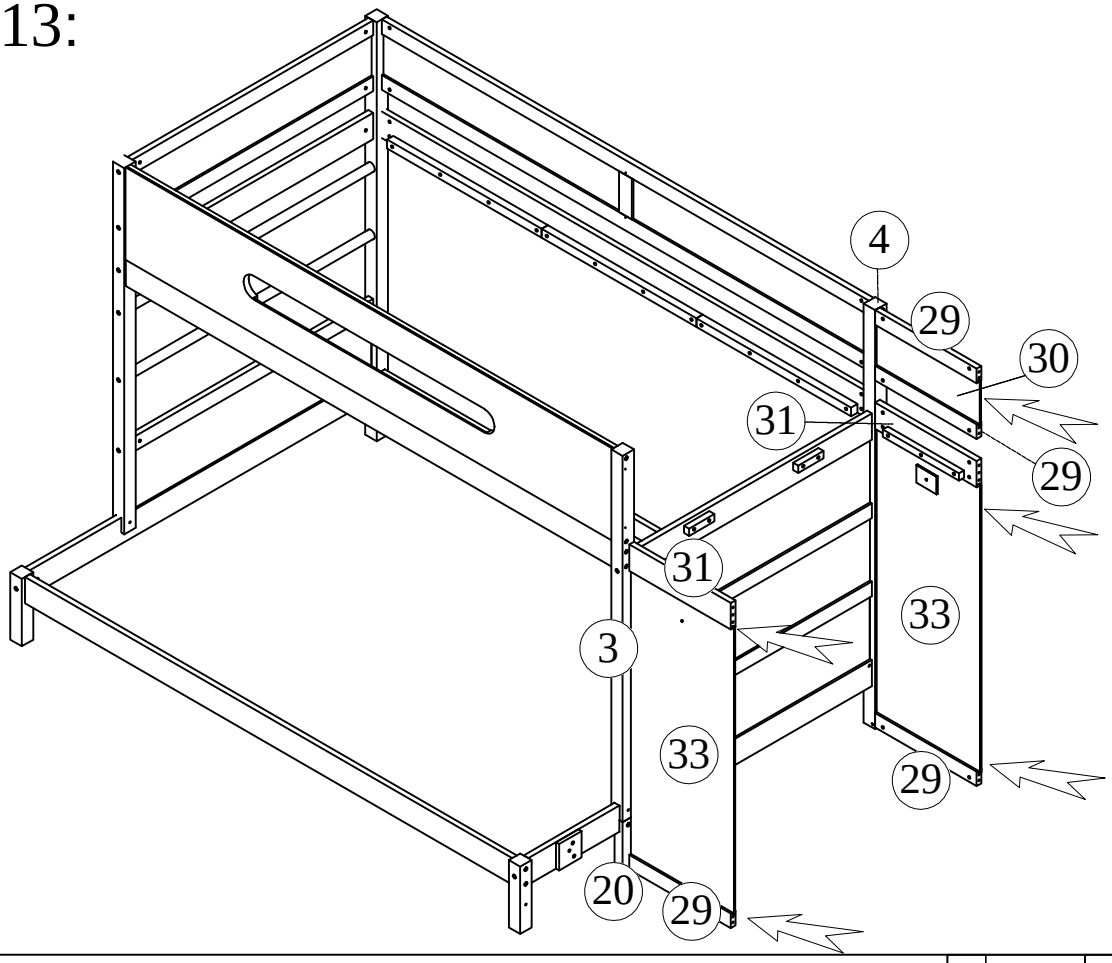


STEP-12:

R	C	B	G	A
2PCS	1PC	7PCS	8PCS	6PCS

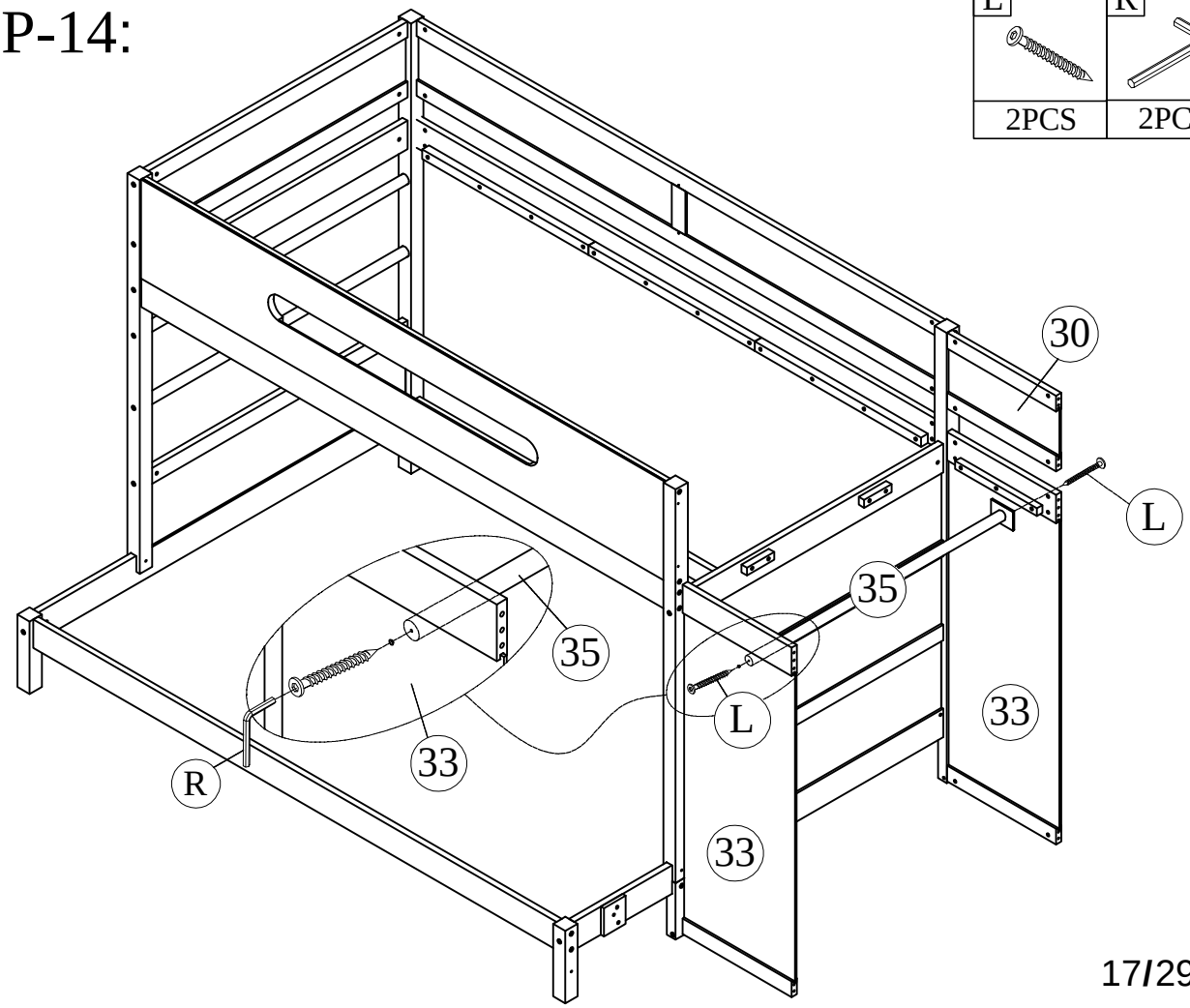


STEP-13:



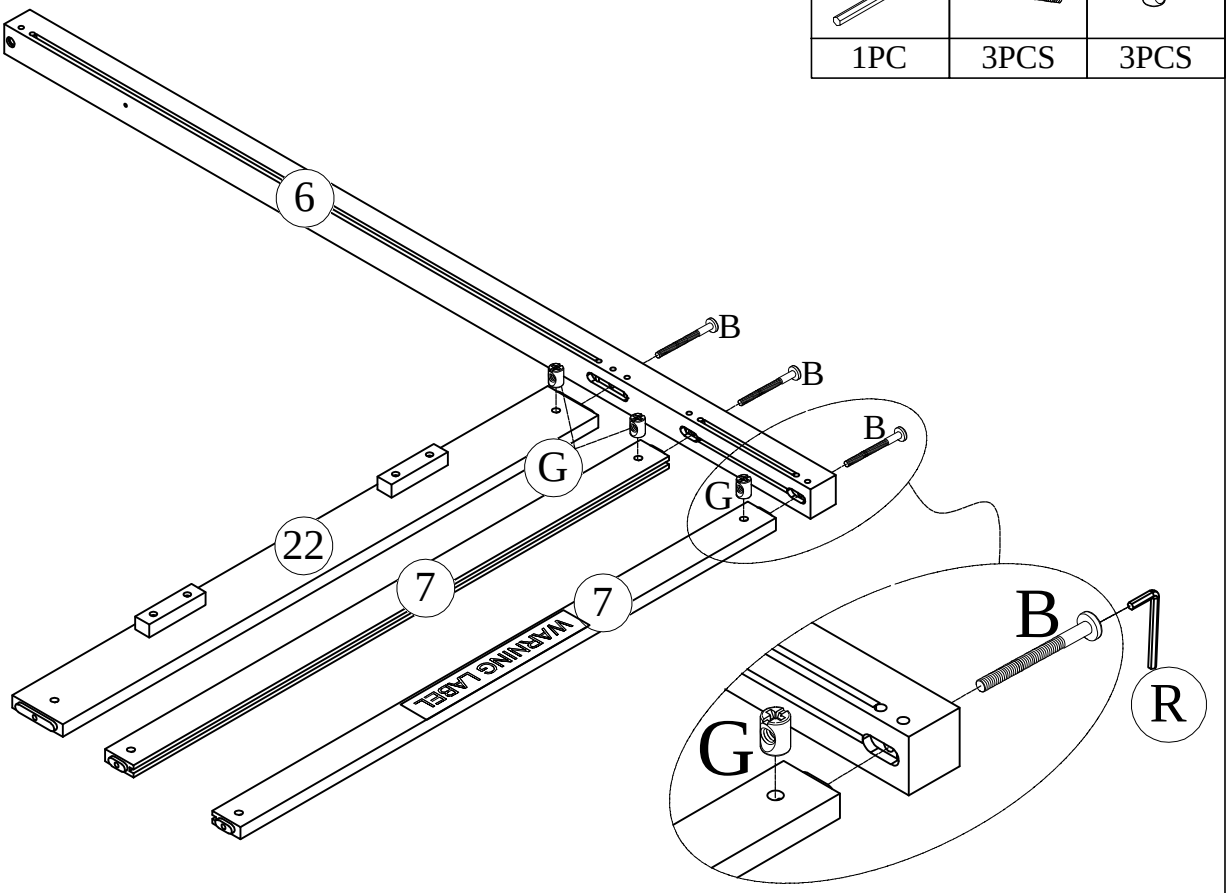
STEP-14:

L	R
2PCS	2PCS



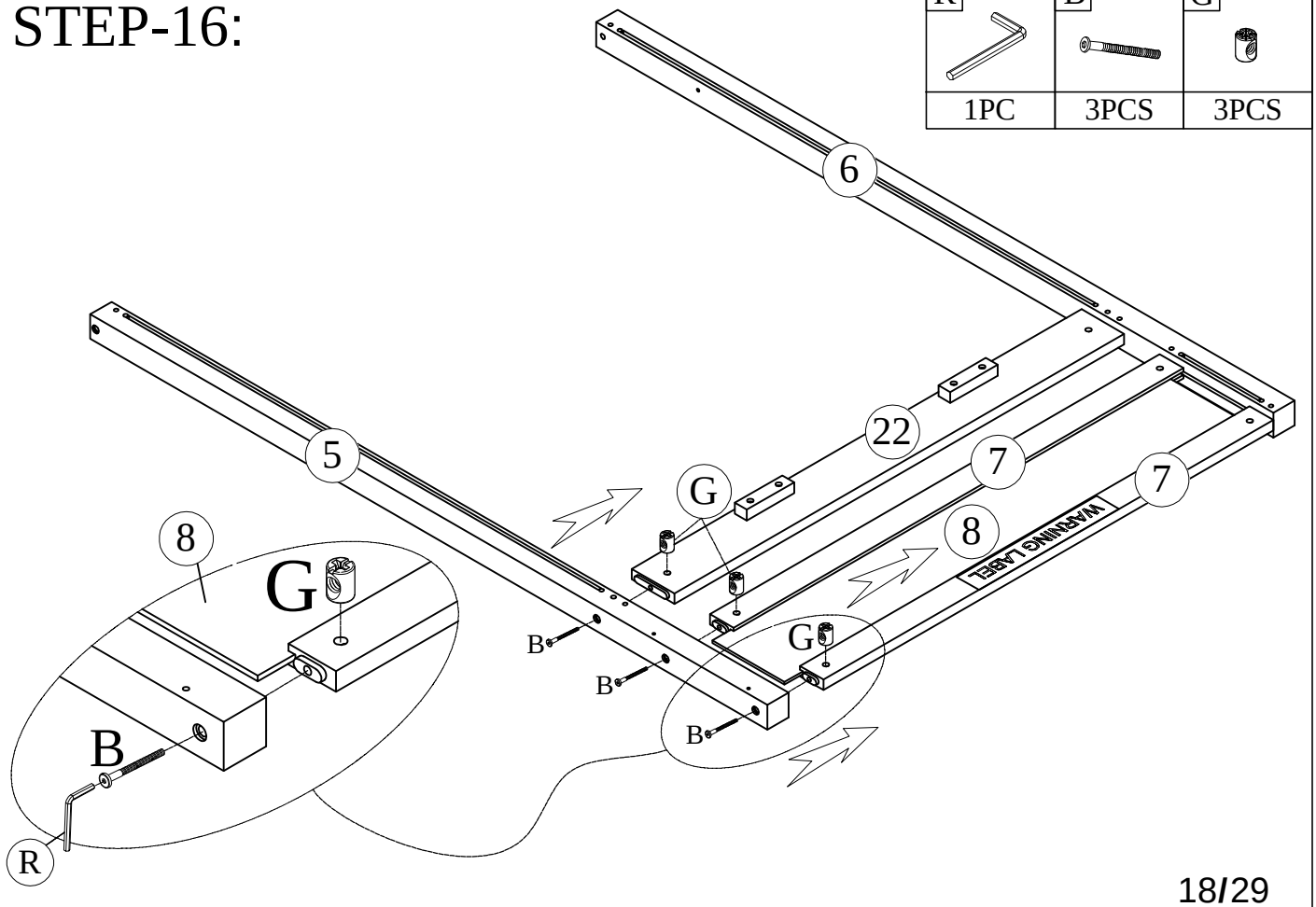
STEP-15

R	B	G
1PC	3PCS	3PCS



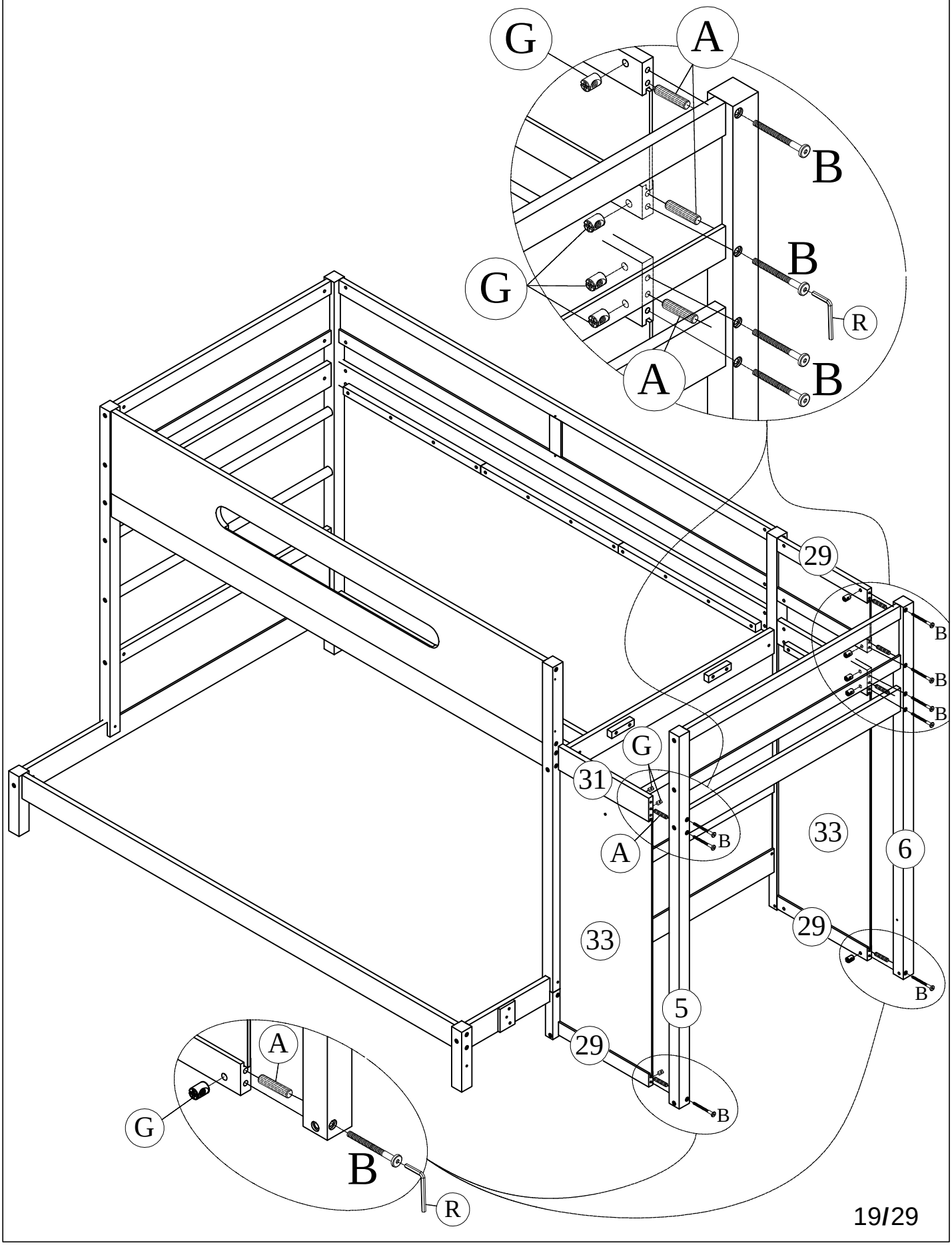
STEP-16:

R	B	G
1PC	3PCS	3PCS



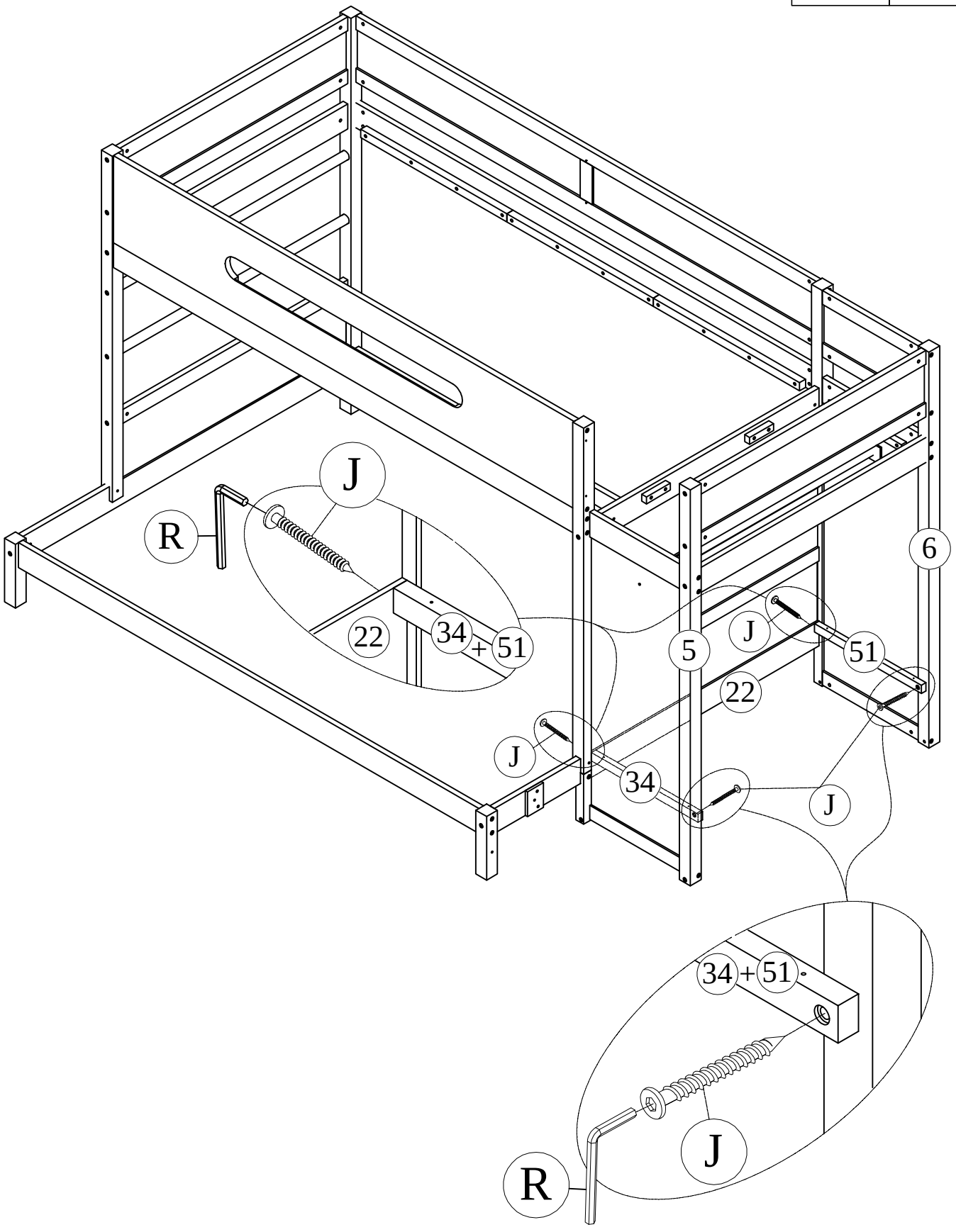
STEP-17:

R	B	G	A
2PCS	8PCS	8PCS	6PCS



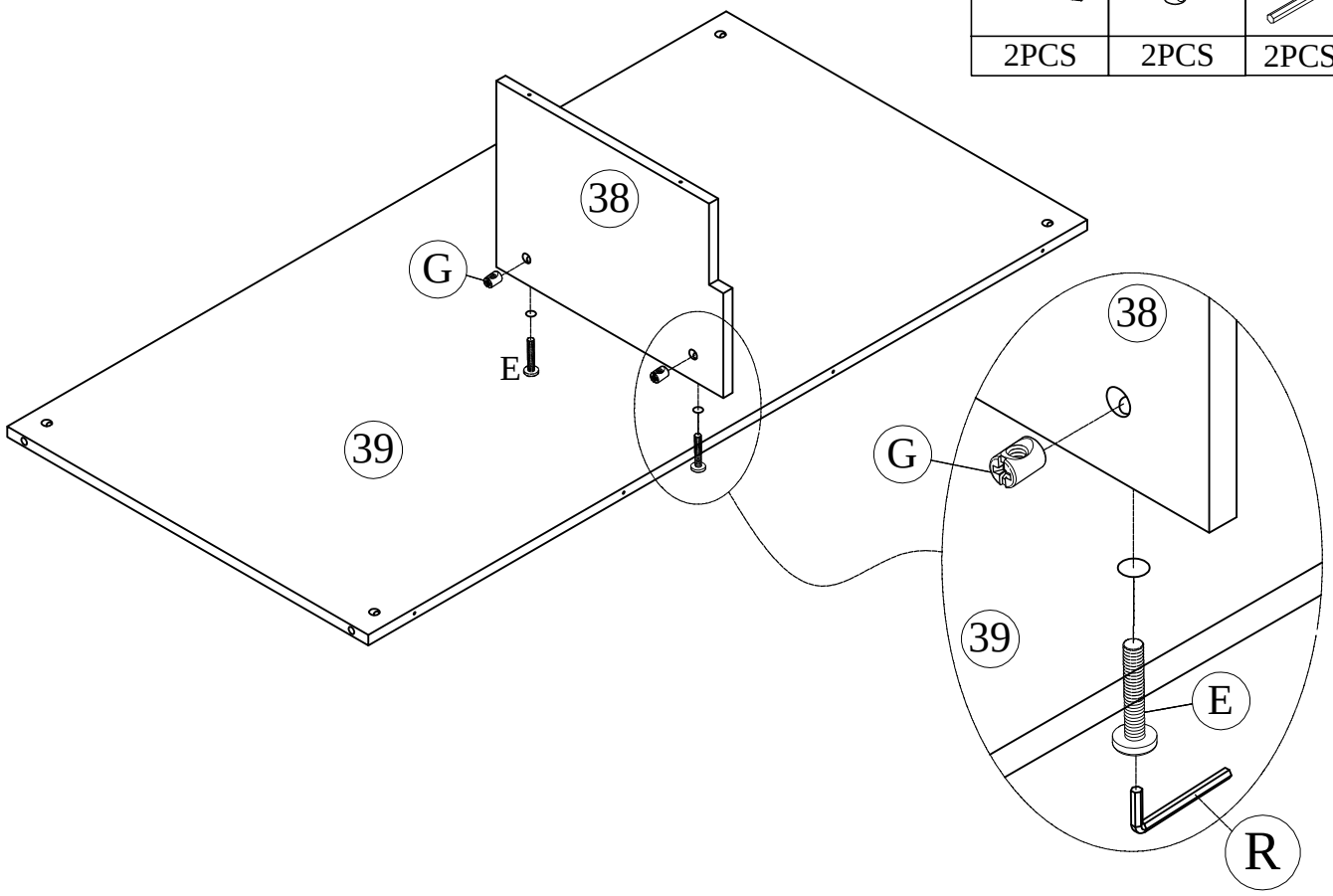
STEP-18:

J	R
4PCS	2PCS



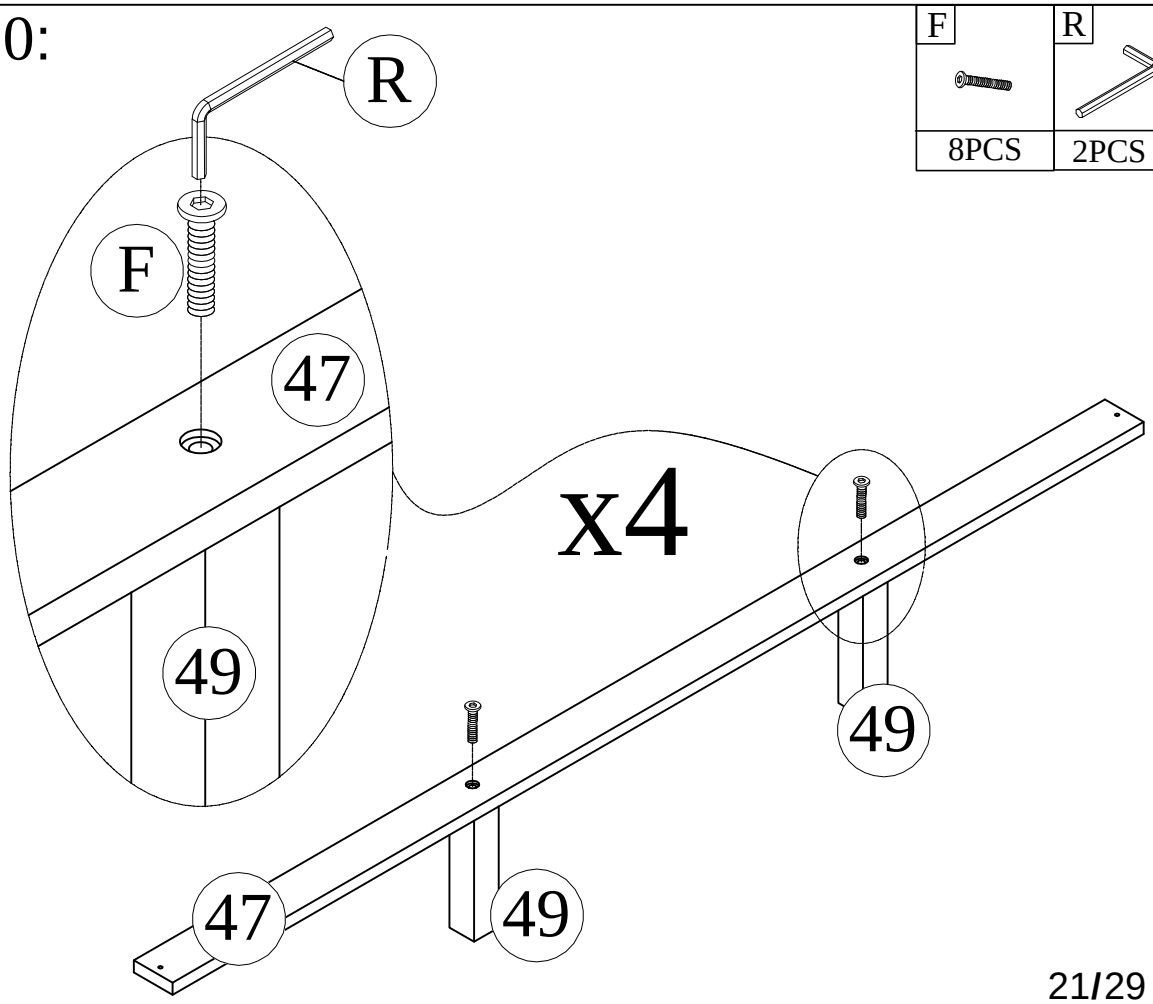
STEP-19

E	G	R
2PCS	2PCS	2PCS



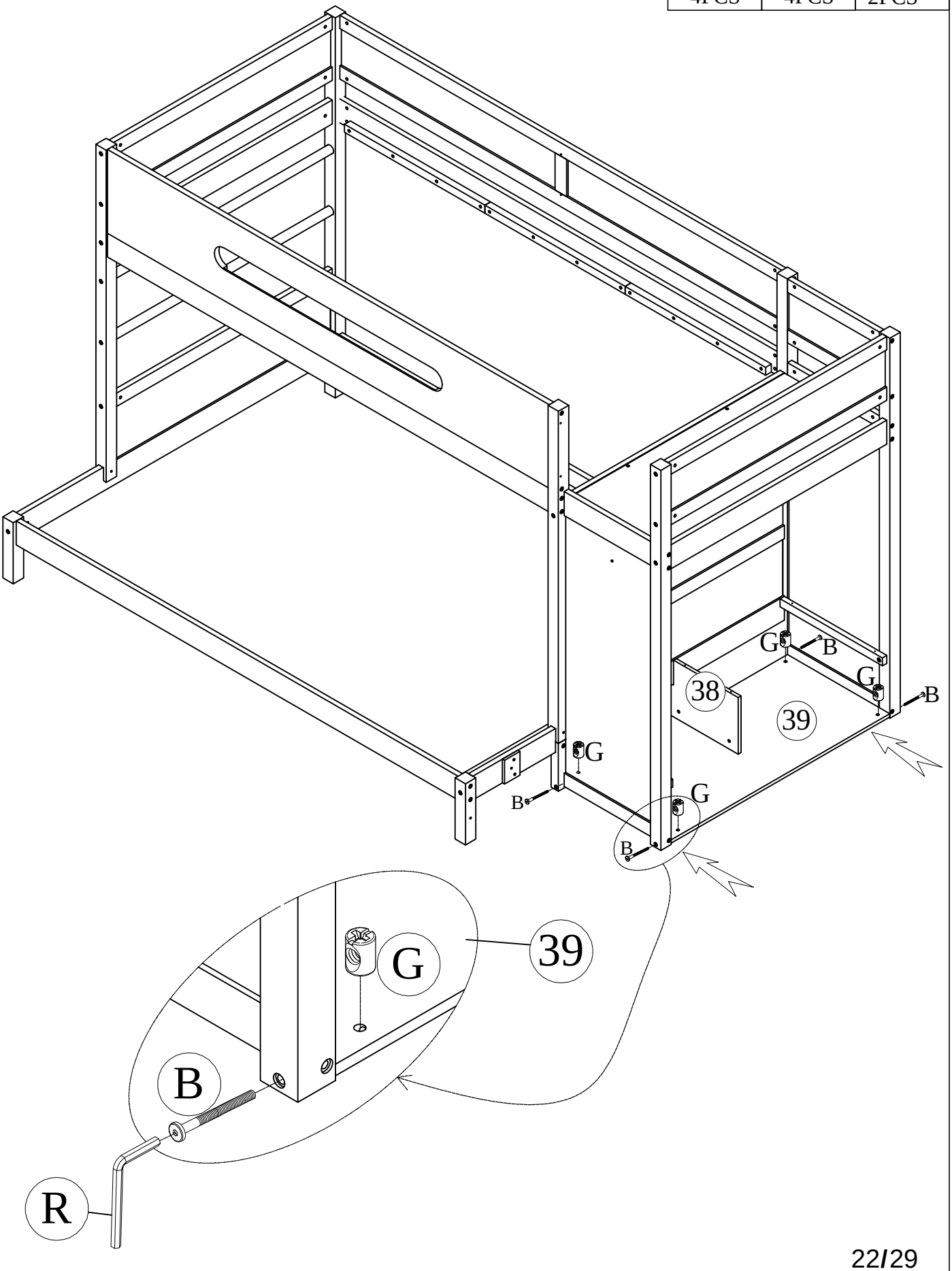
STEP-20:

F	R
8PCS	2PCS



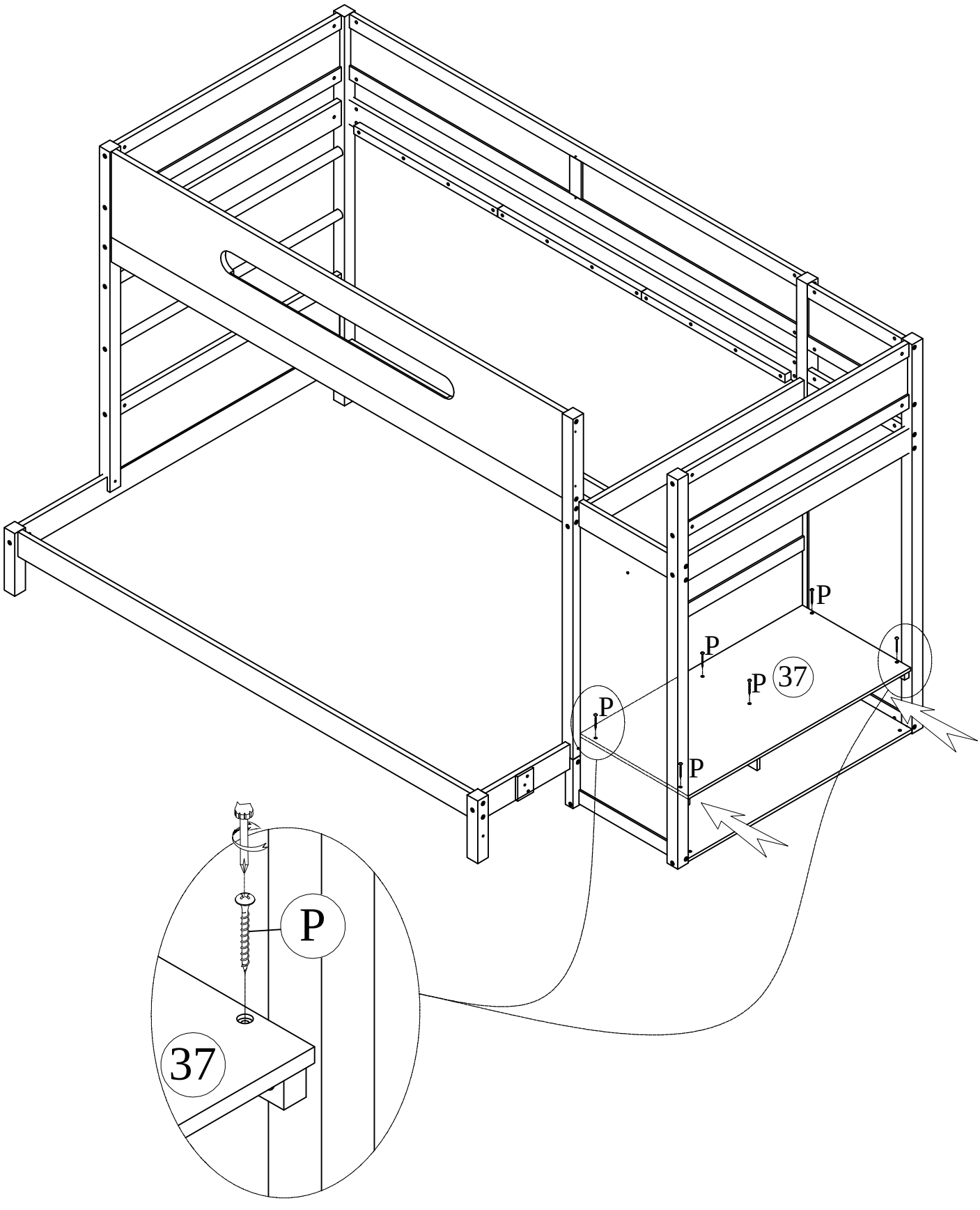
STEP-21

G	B	R
4PCS	4PCS	2PCS



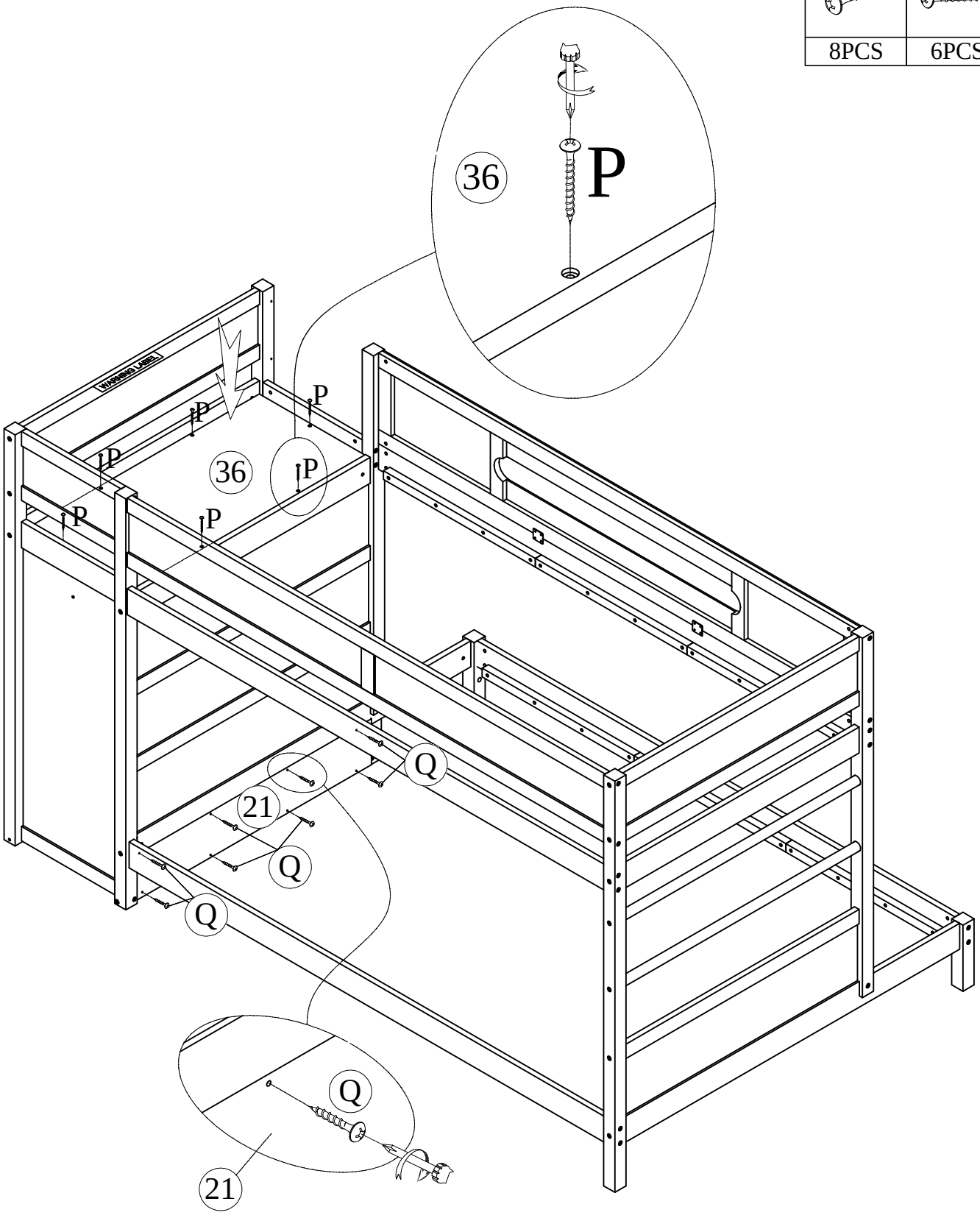
STEP-22:

P
6PCS

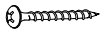


STEP-23:

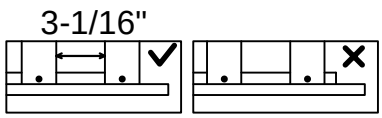
Q	P
8PCS	6PCS

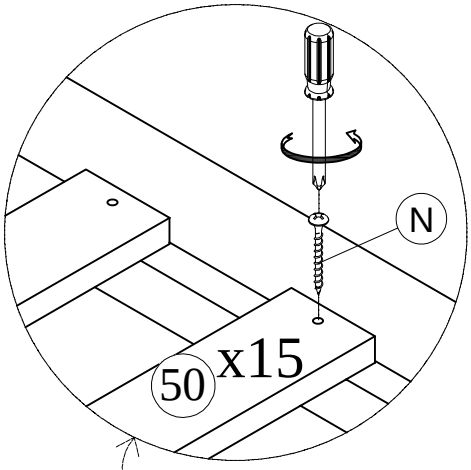


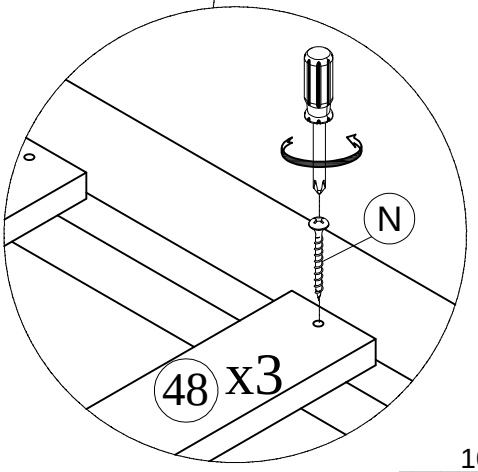
STEP-24:

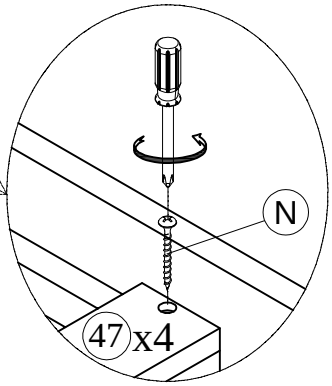
N

44PCS

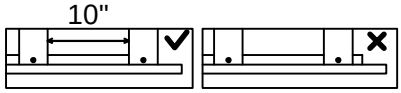
Note: Do not lock the screws of the bed slats to be outemost edge the bed slats, you need to leave a certain space at the edges, ortherwise it will cause the board to break





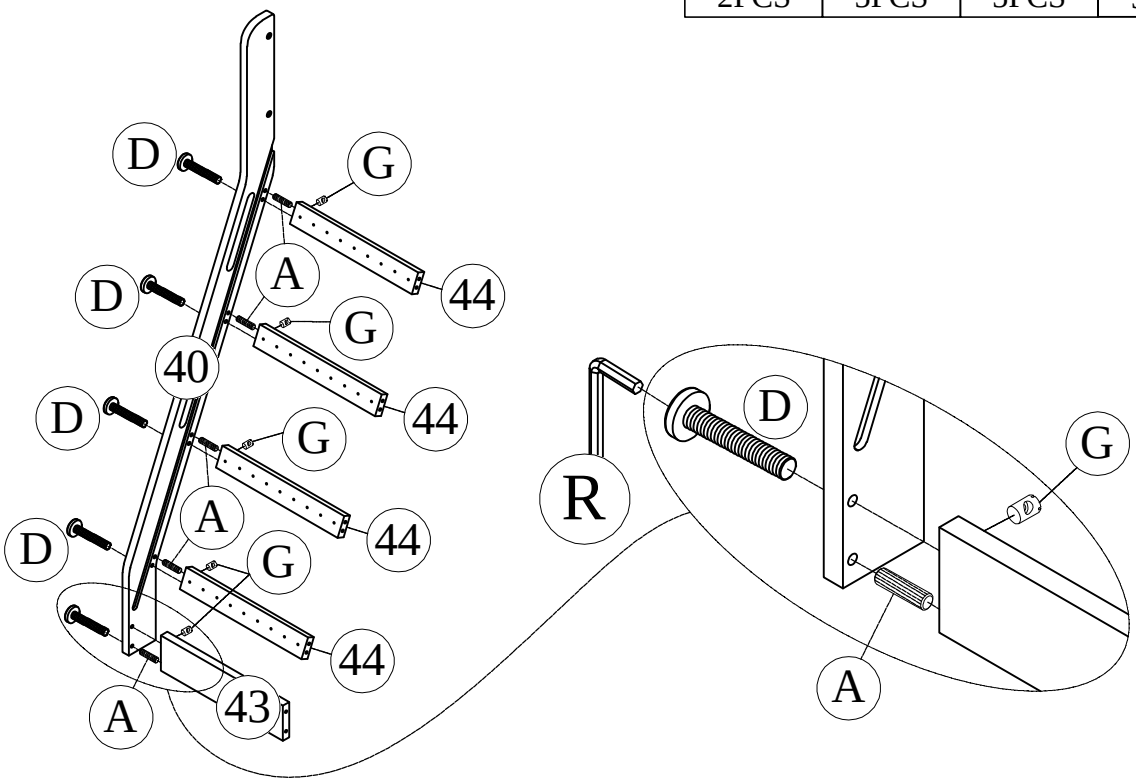




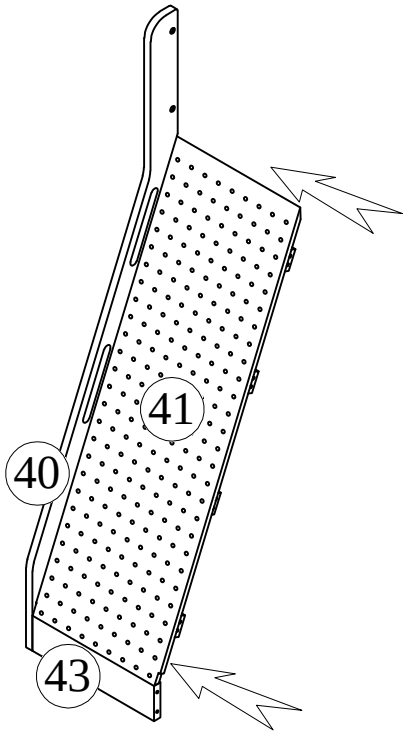


STEP-25:

R	D	G	A
2PCS	5PCS	5PCS	5PCS

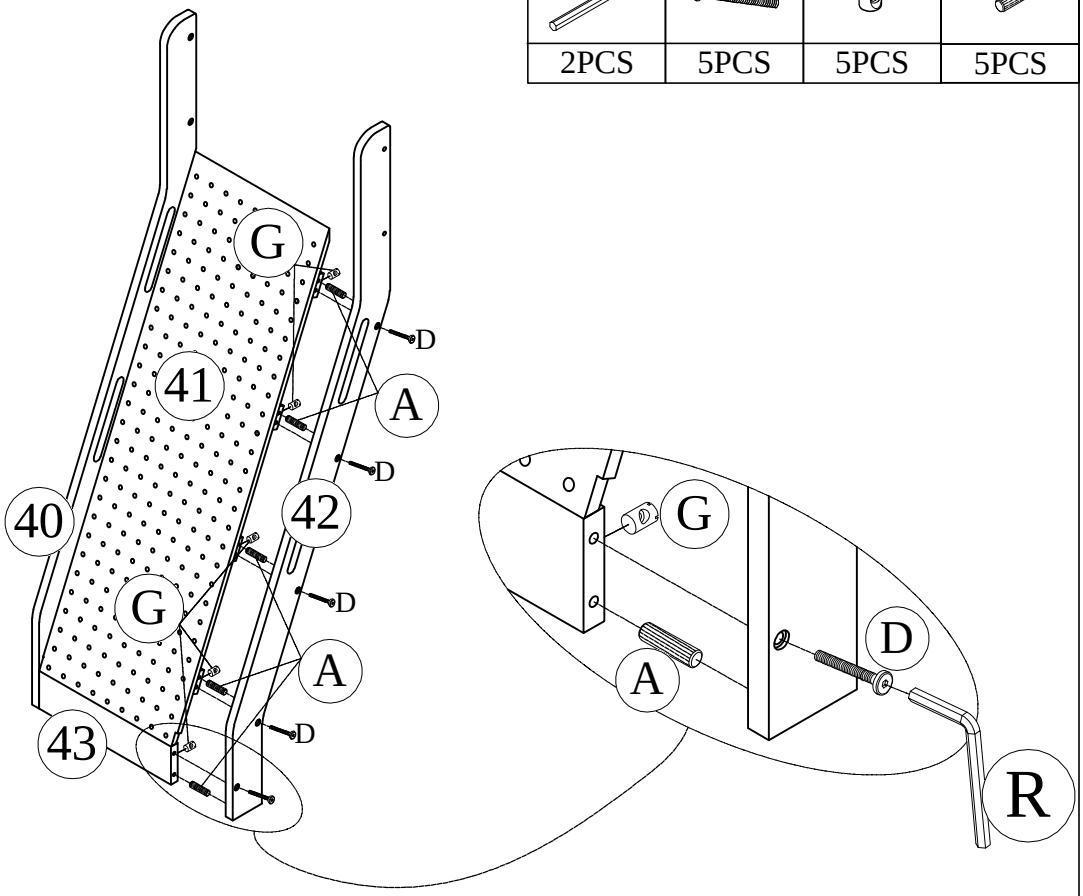


STEP-26:



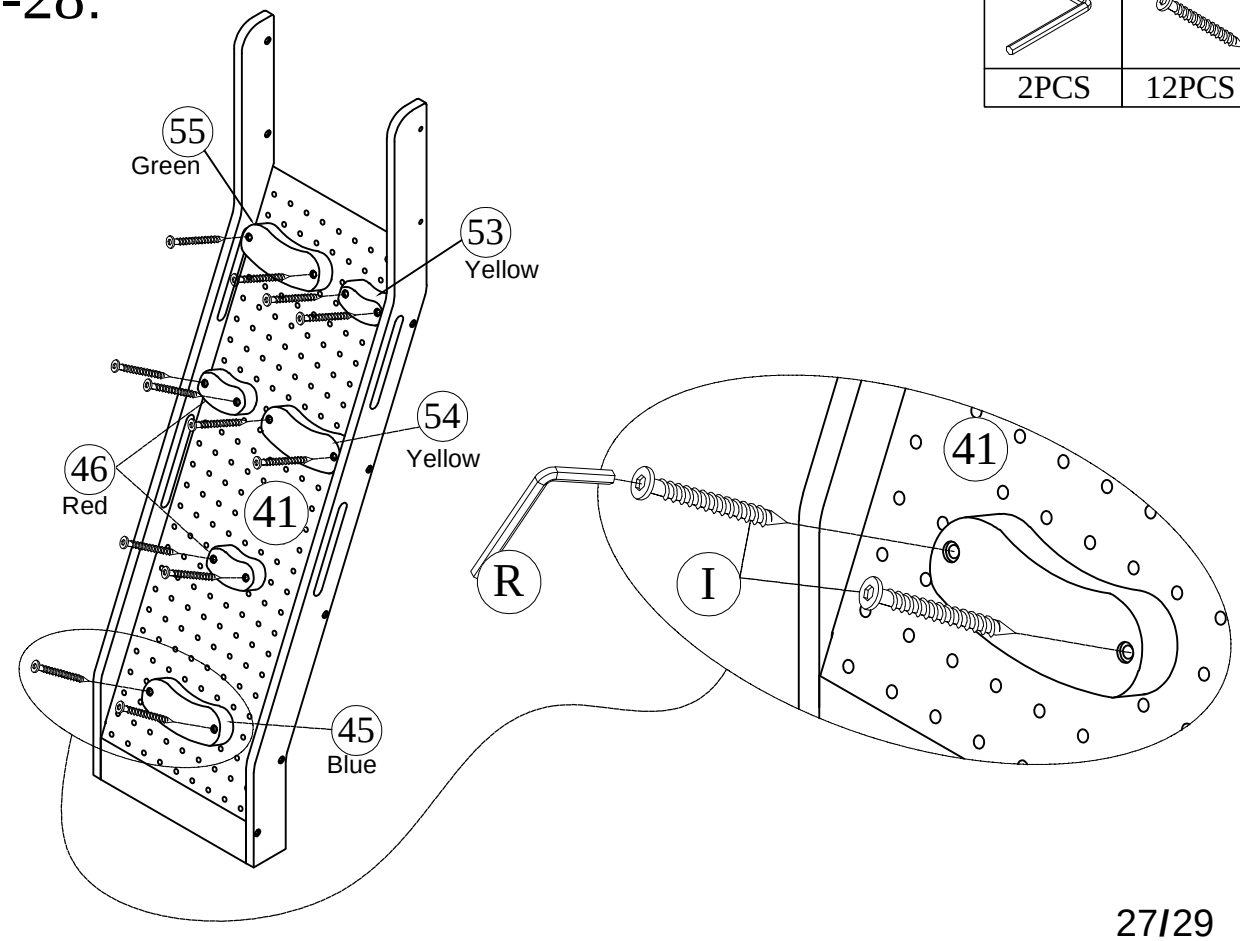
STEP-27:

R	D	G	A
2PCS	5PCS	5PCS	5PCS



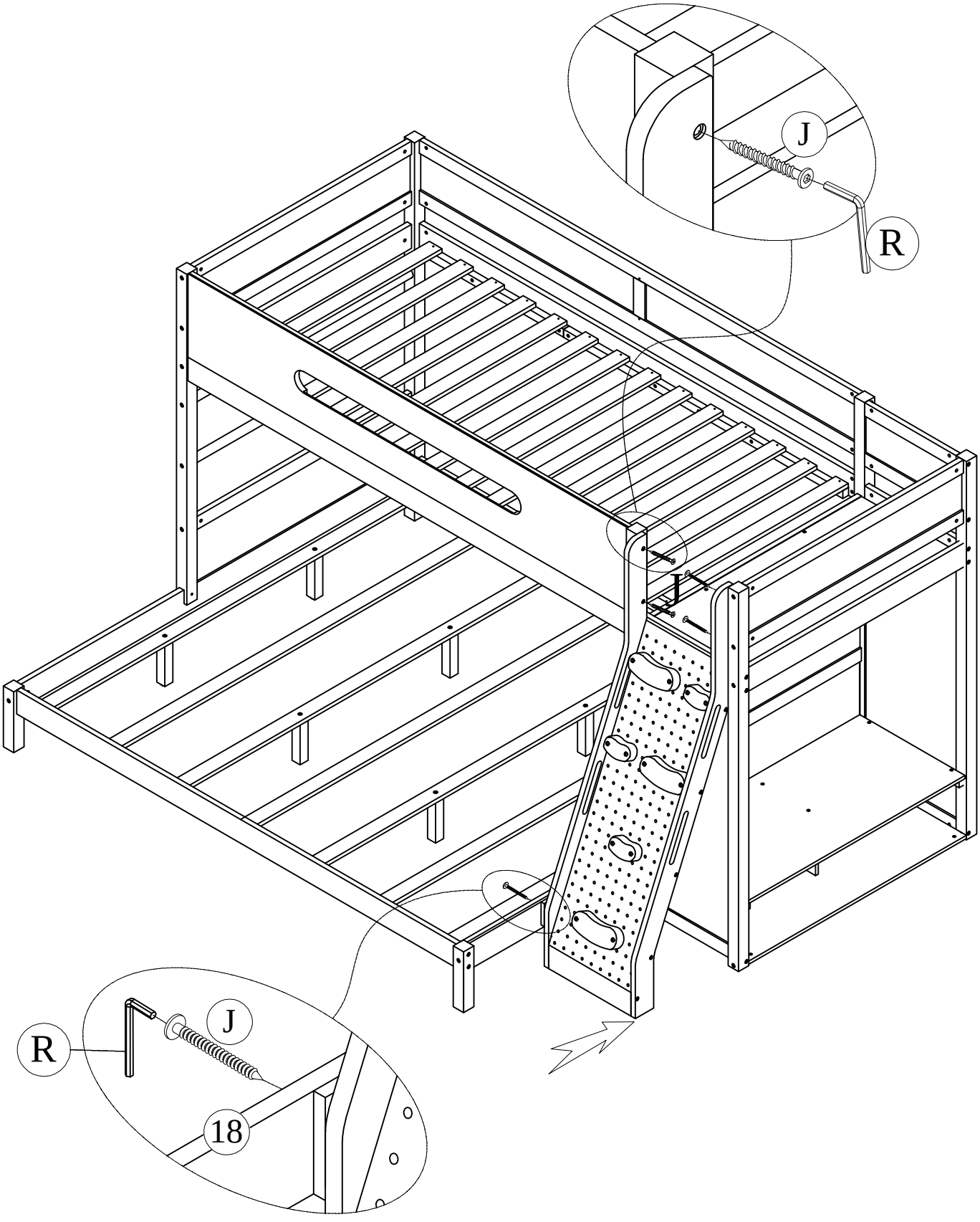
STEP-28:

R	I
2PCS	12PCS



STEP-29:

R	J
2PCS	5PCS



COMPLETED

