SKU:TC05601201WH-02BK

Assembly Instructions

Decorate your home, Brighten wonderful life

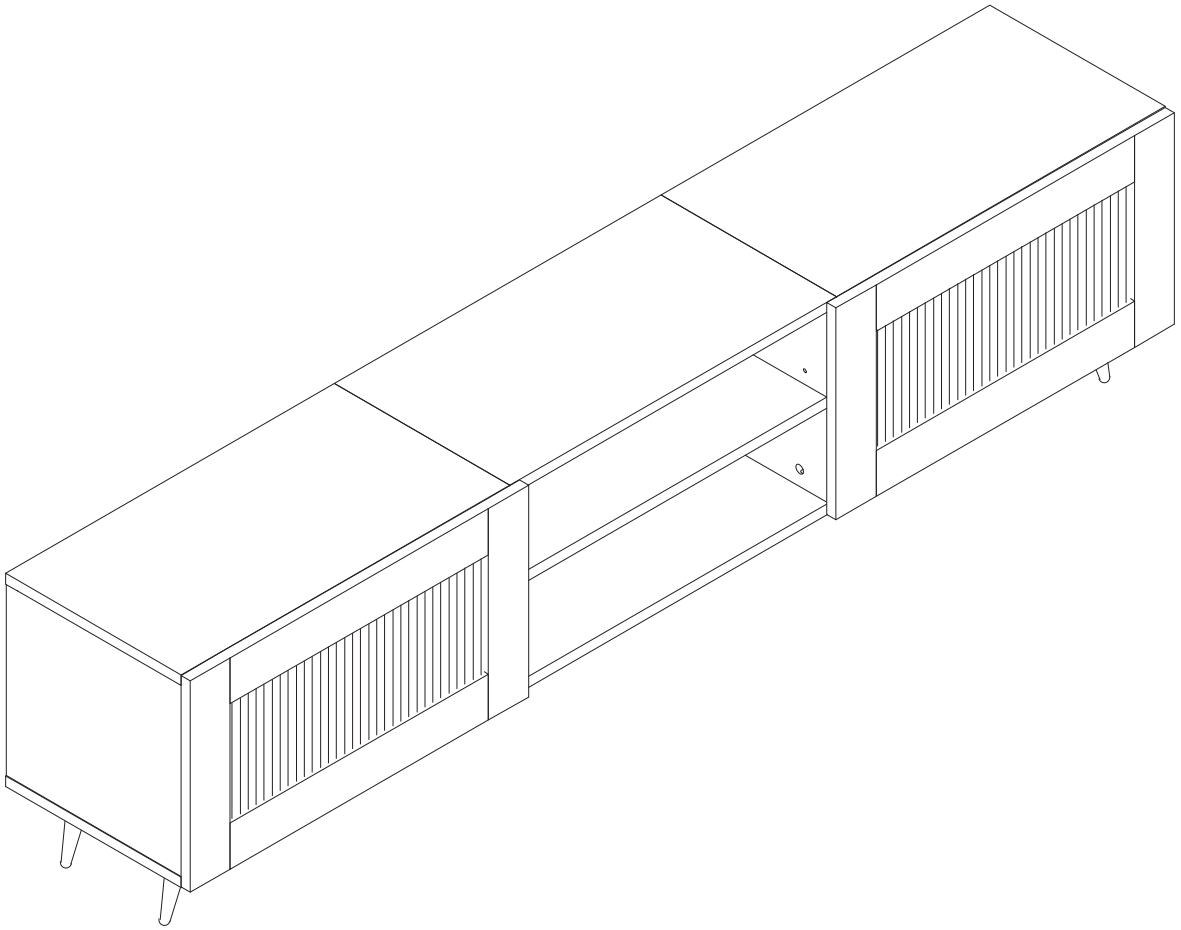

HedoAjim®

CUSTOMER CARE

HAPPY

Congratulations
Happy shopping
Feel free to share with your friends or family
Thank you for your 5-star feedback and positive reviews to help others
Good advice leads to the best service

NOT HAPPY

We apologize for the bad shopping experience
Any defects, broken, missing pieces, delays or accidents Please contact us as soon as possible
Amazon online email or official email are available
US:changyingguoji3@hotmail.com;
UK:prochainuk@outlook.com;
DE:prochainuk@outlook.com

HedoAjim®
(Parent Brand)

Hironpal
(Sub-brand1)

KEEPREAPER
(Sub-brand2)

Hironpal and Keepreaper are both sub brands of HedoAjim

NOTICE:

- Basic precautions should always be followed when using this product.
- Failure to observe all instructions and warnings may cause severe property damage or personal injuries.
- Check the product and hardware accessories in the box; and confirm whether the instructions are complete.
- When installing, please pay attention to the protection of the parts. The soft material must be placed under the product, and please carefully handle it to avoid surface damage.
- After the assembly is completed, please adjust the placement position according to the actual situation.
- Keep children away from cabinets, accessories, and installation tools. They are at risk of injury to the child.
- Two people are recommended for assembly.
- To retain the best quality finish, clean product regularly with a soft damp cloth.
- Risk of electric shock. Connect this furnishing to a properly grounded circuit only. See Grounding instructions.
- If you need the electronic manual,please contact our customer service to get it.(email:US:changyingguoji3@hotmail.com; UK:prochainuk@outlook.com;DE:prochainuk@outlook.com)

ITEM SPECFICATION

SKU	Product Dimension	Package Dimension	Color
TC05601201WH	62.99*11.81*15.75 in	30.71*15.75*9.65 in	White
TC05601202BK	62.99*11.81*15.75 in	30.71*15.75*9.65 in	Black

Part List

Open the package, and put the item on the mat with care.Please install it carefully to ensure your fingers will not be scratched.

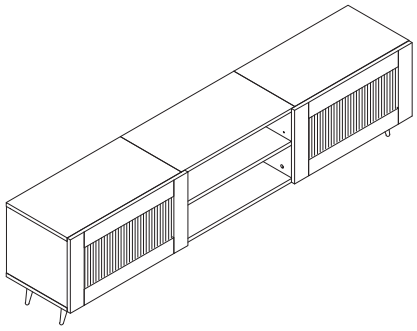

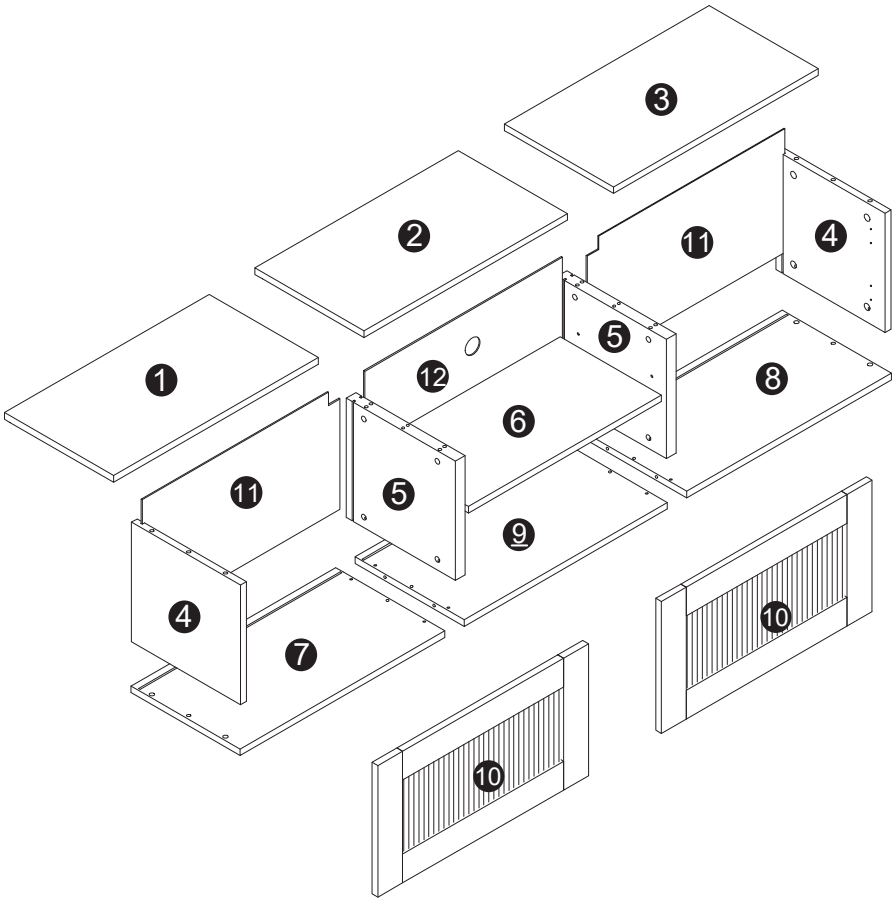

Hardware List

A

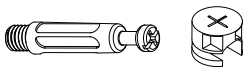

M6*40mm
φ15*12mm
×8 (+1)

B

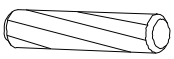

φ8*30mm
×4 (+1)

D

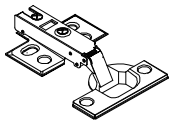

×4

F

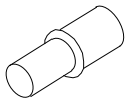

×4 (+1)

H

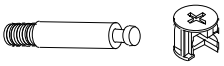

M5*24mm
φ12*10mm
×16 (+1)

K

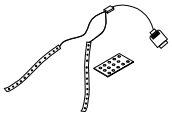

22cm
×1

L



×6 (+1)

M

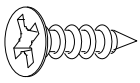

M3.5*14mm
×56 (+1)

Q

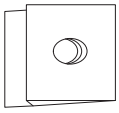

×8 (+1)

S

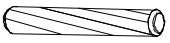

M6*30mm
×12 (+1)

T

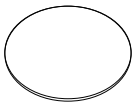

×24 (+1)

Y



×4

Z

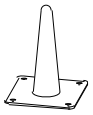

×2

Extra white cam



×2

Panel List

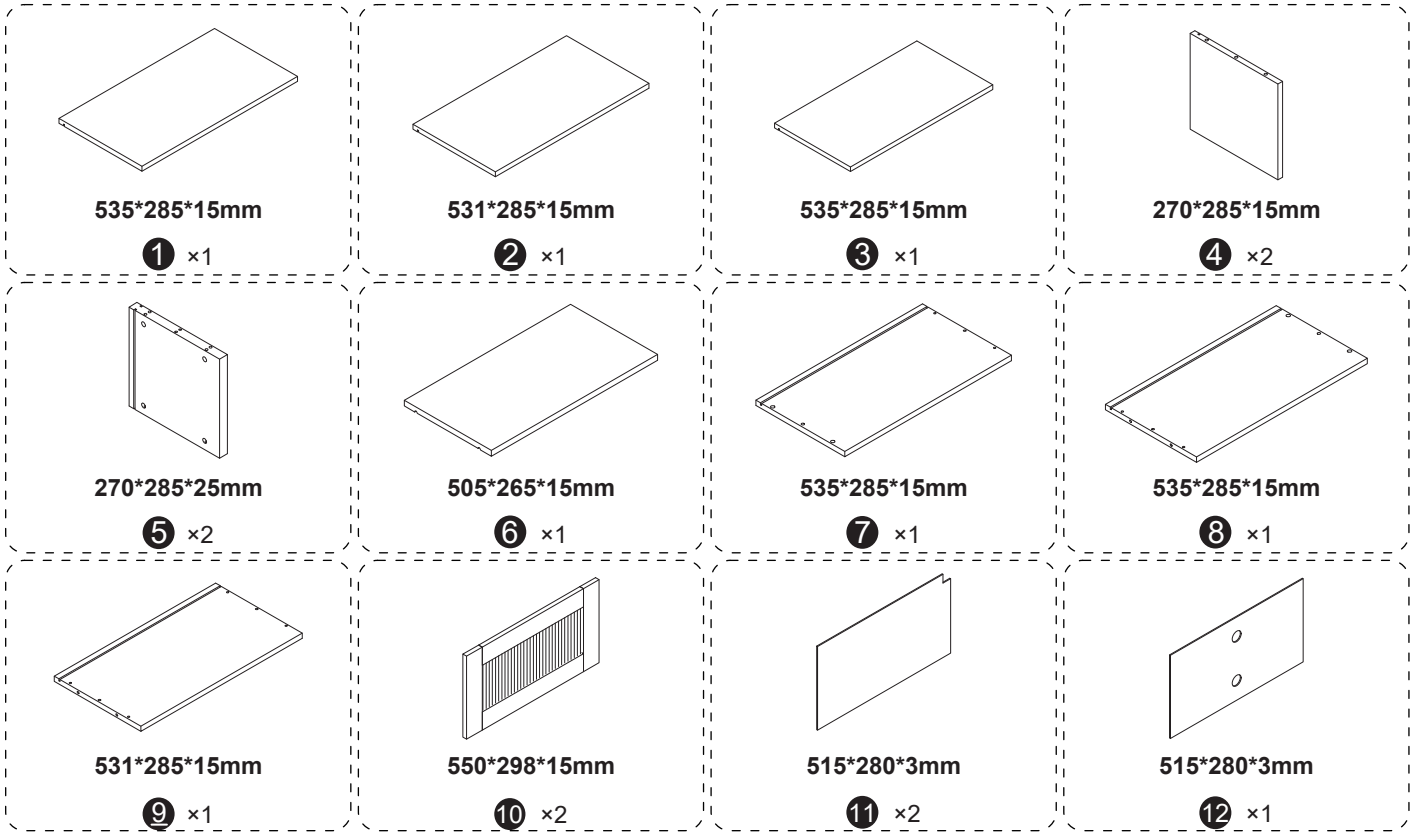

Start...

Step1

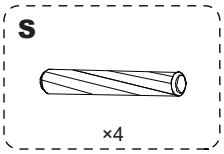

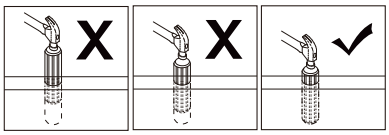

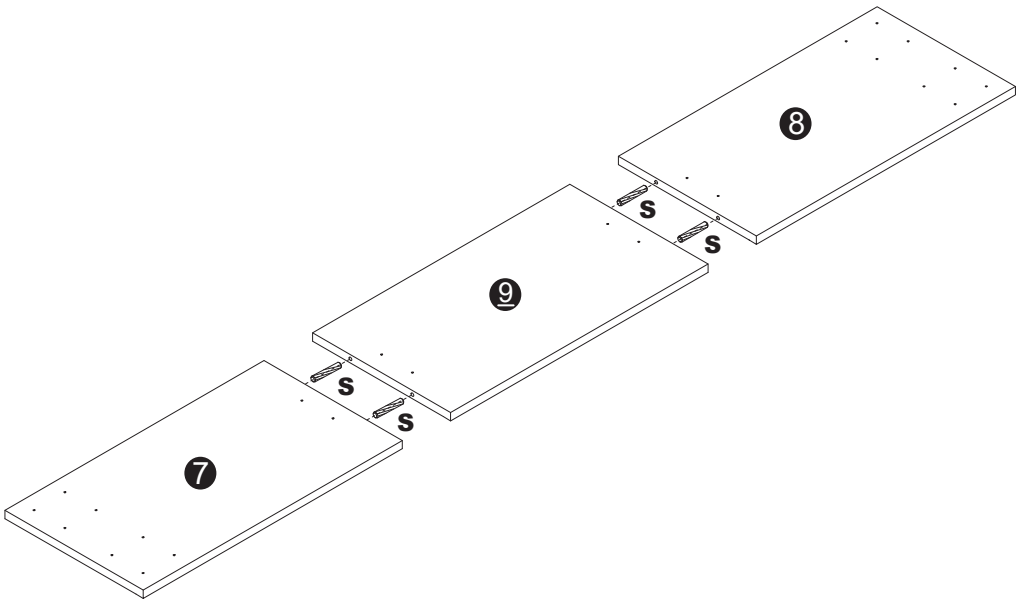

Step2

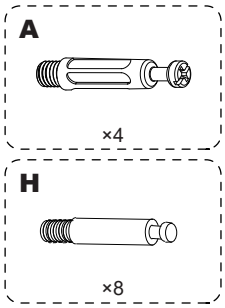

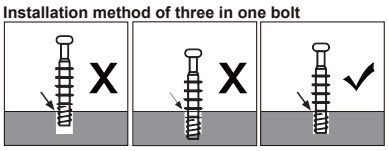

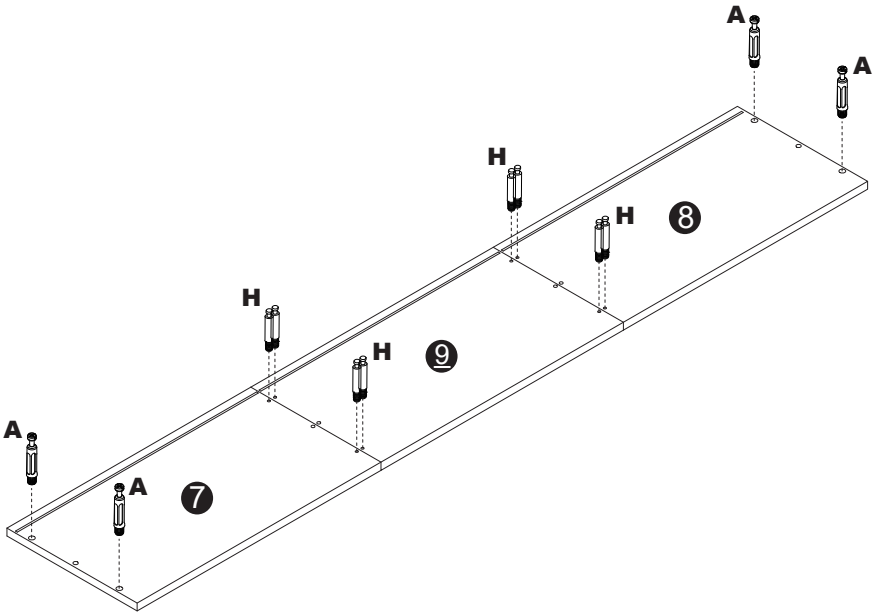

Step3

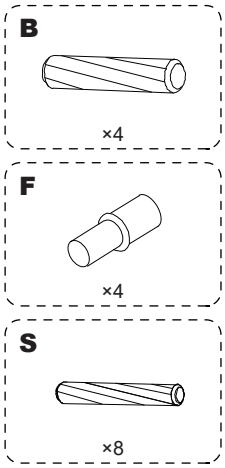

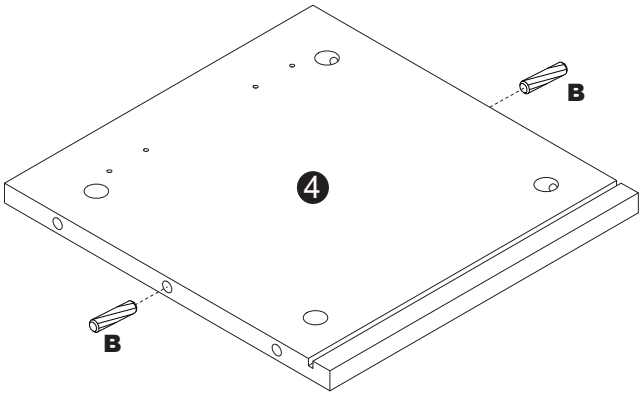

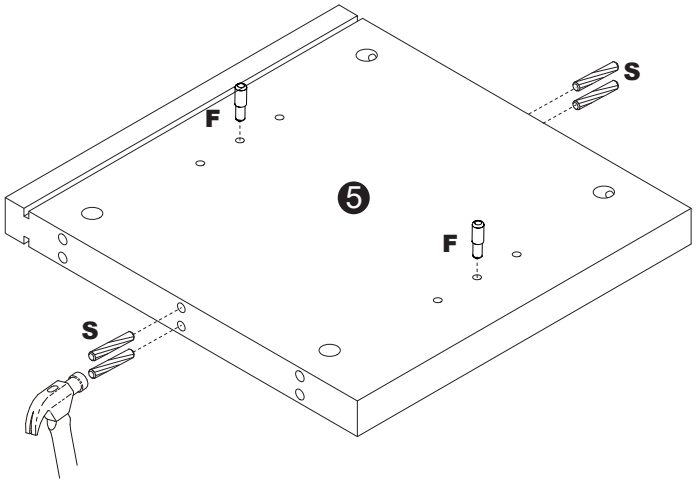

X2

Step4

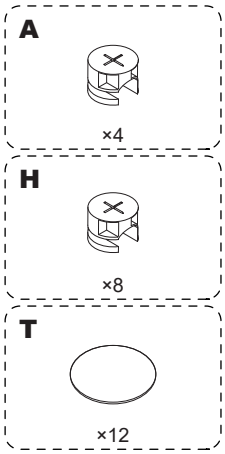

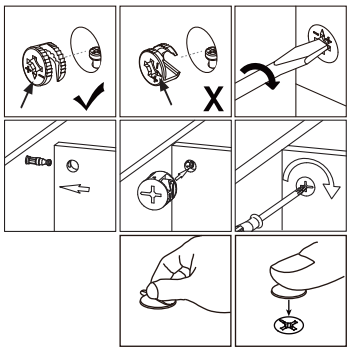

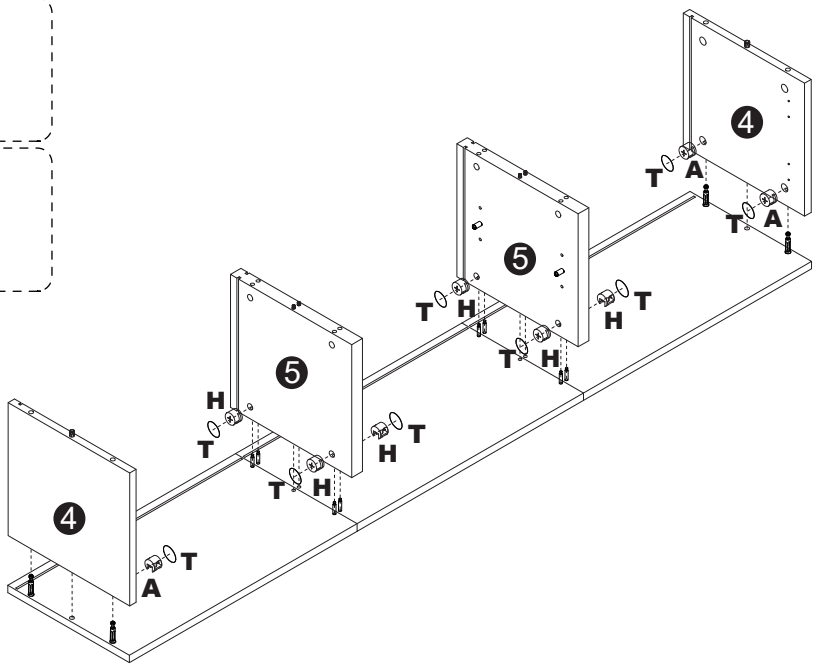

Step5

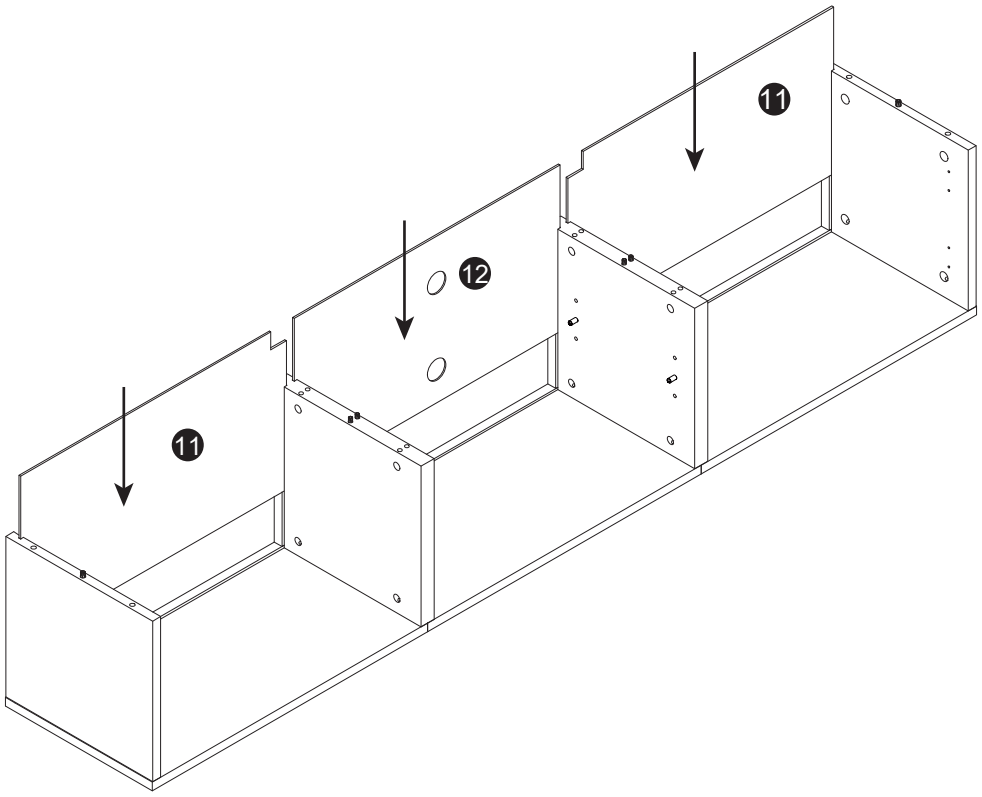

Step6

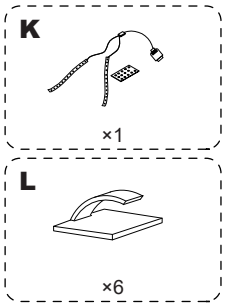

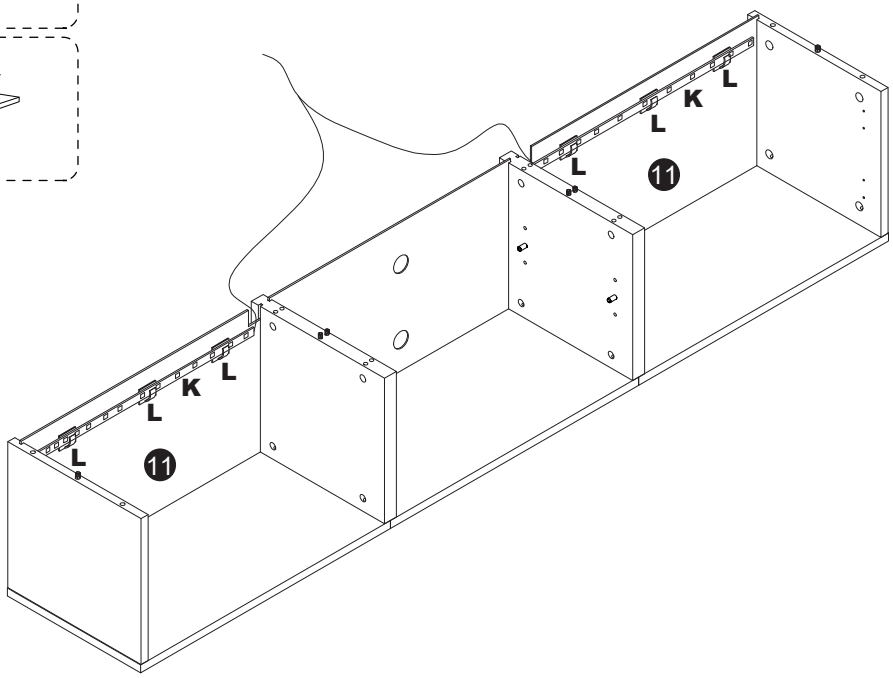

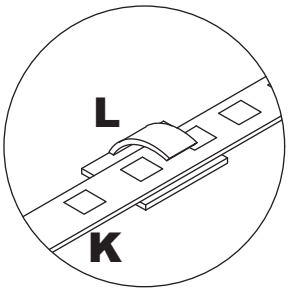

Step7

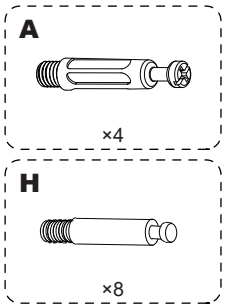

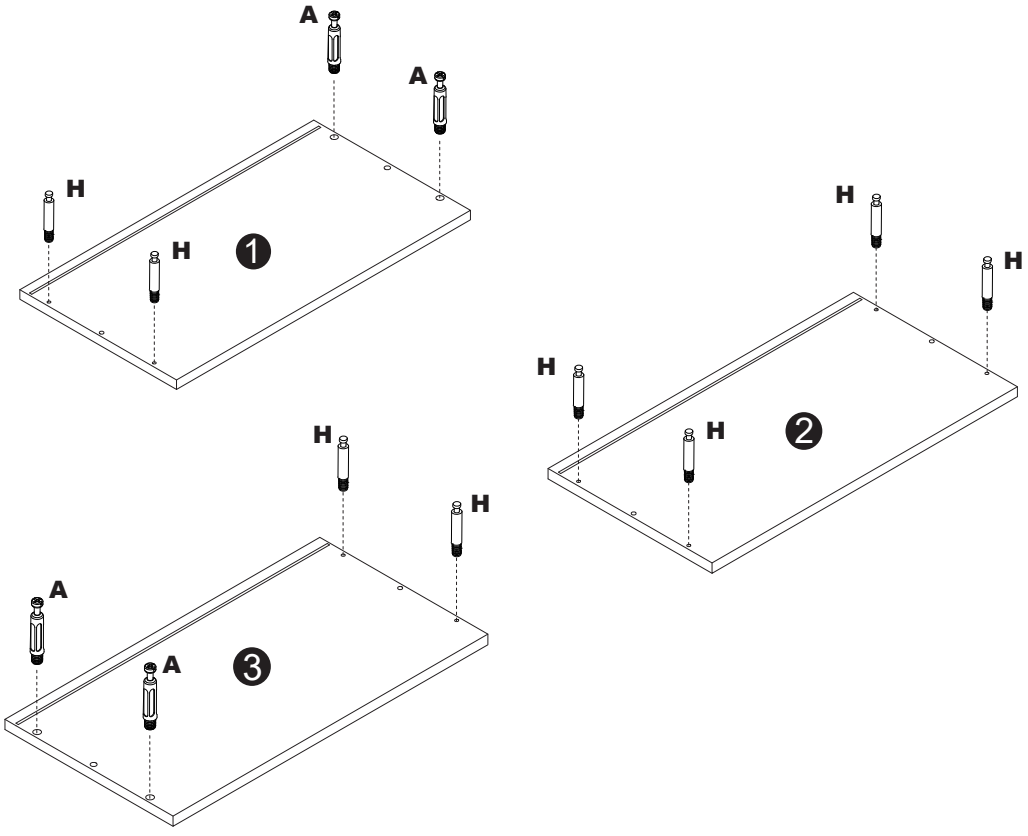

Step8

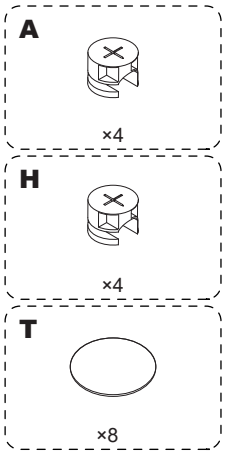

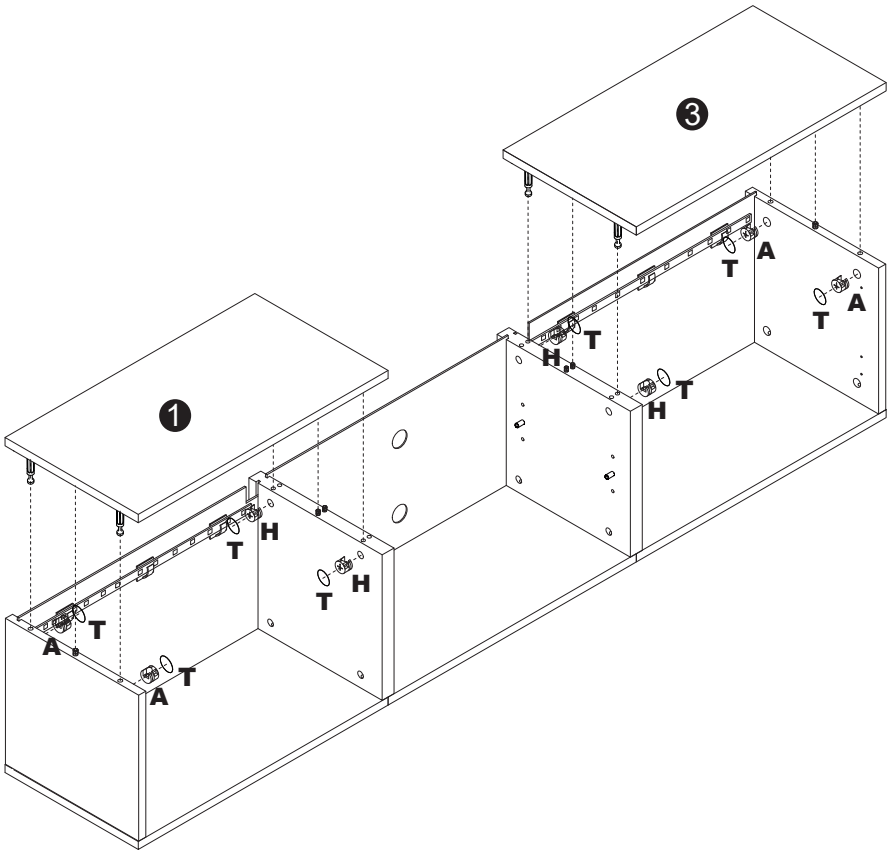

Step9

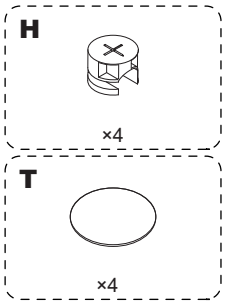

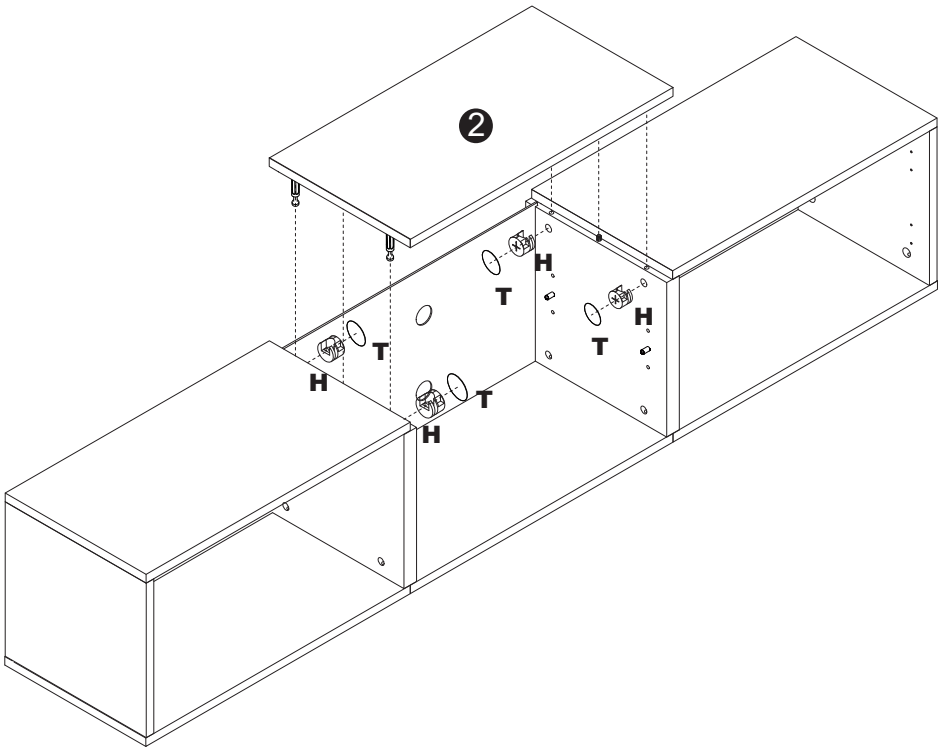

Step10

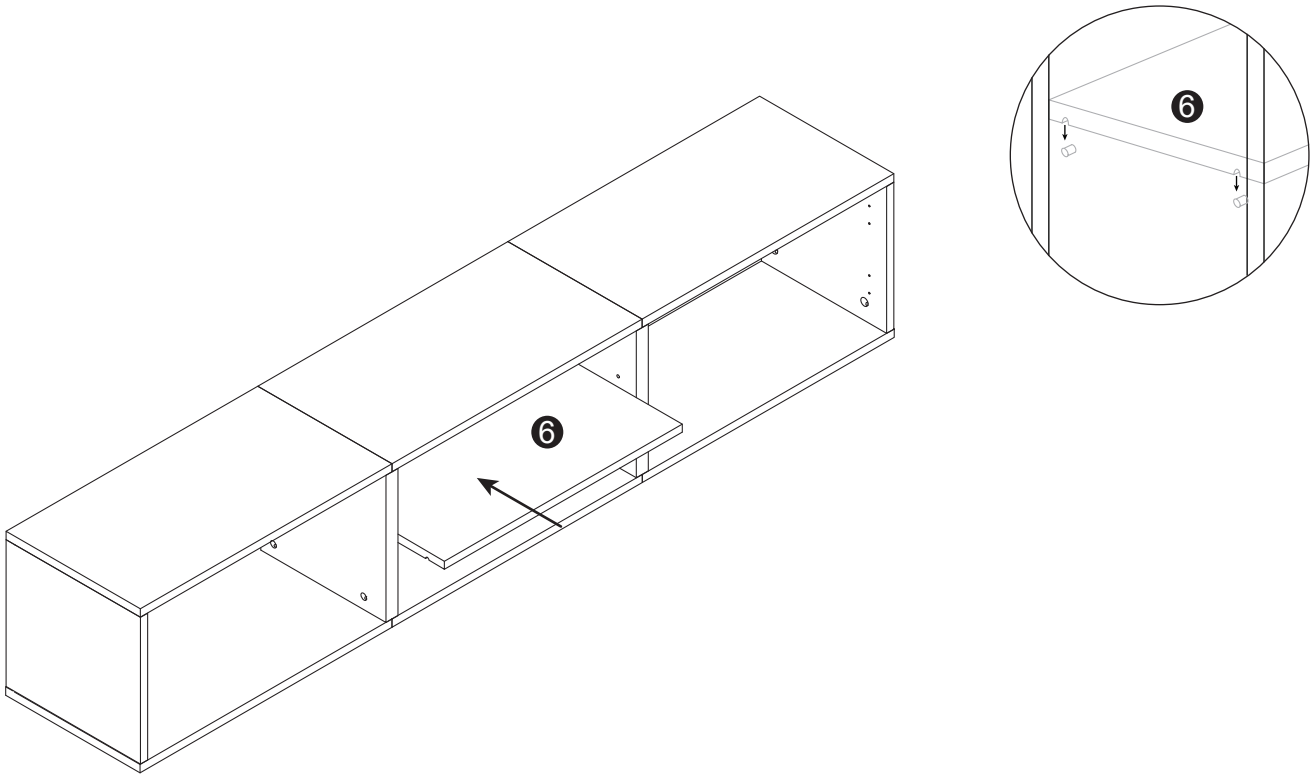

Step11

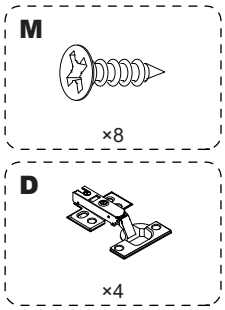

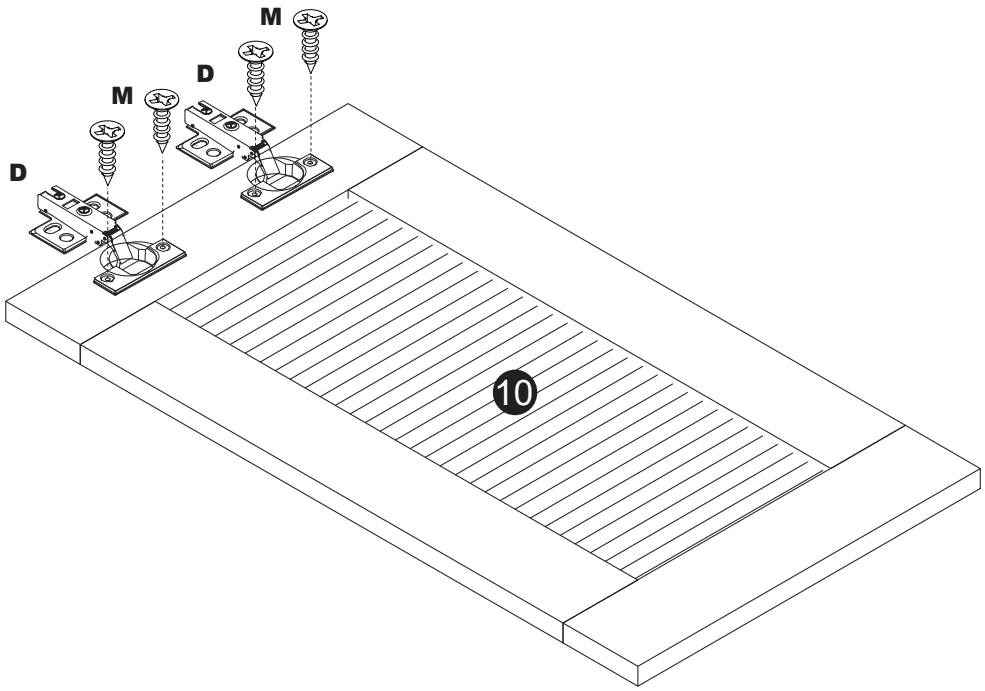

X2

Step12

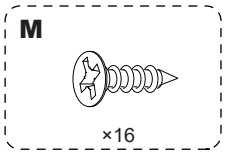

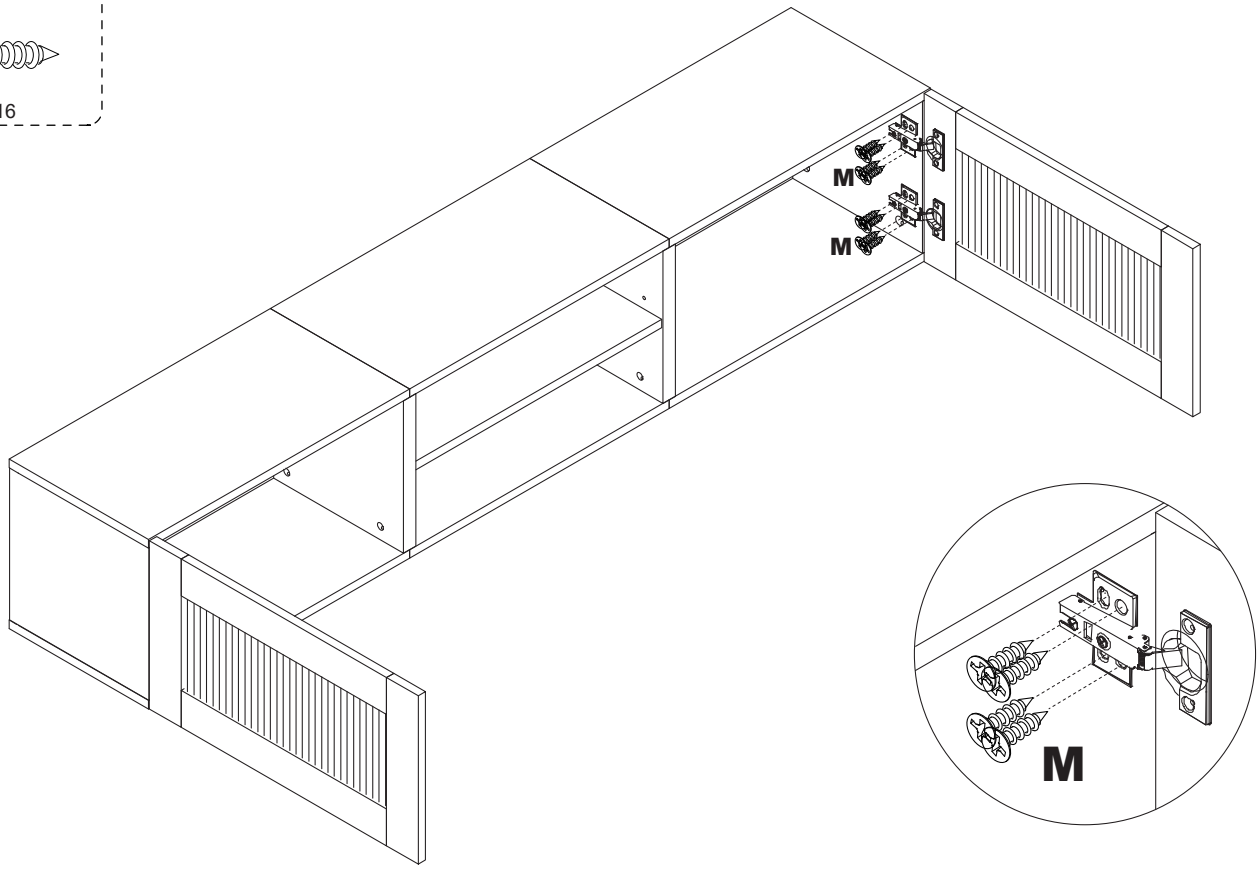

Step13

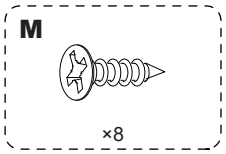

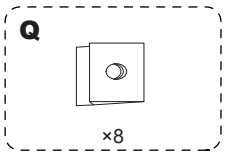

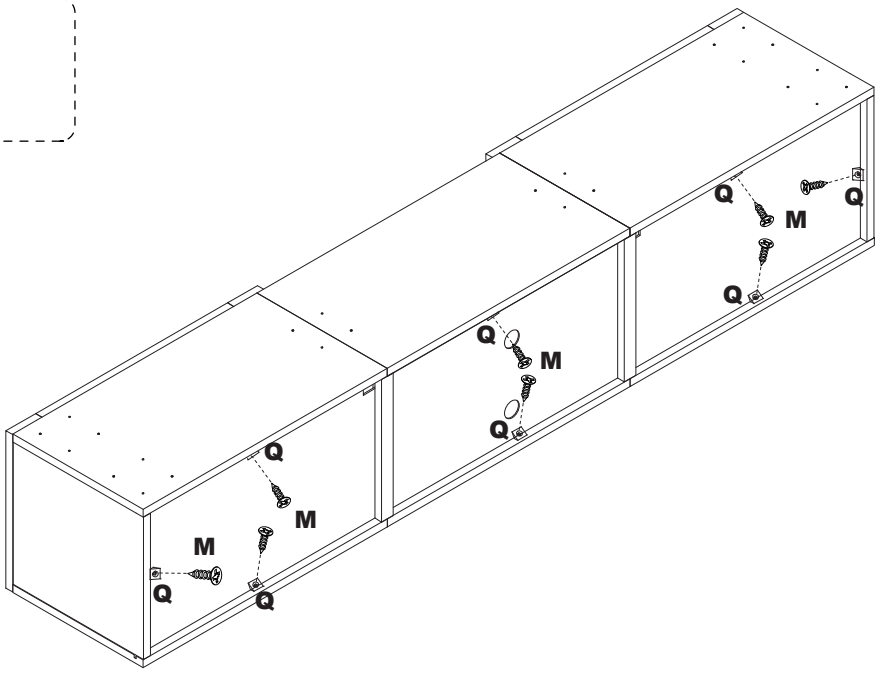

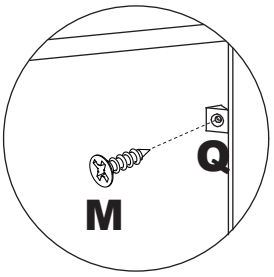

Step14

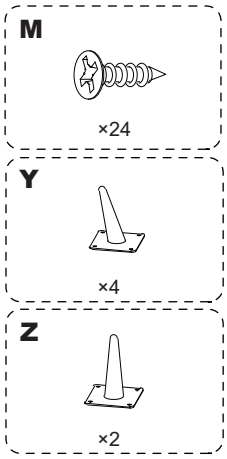

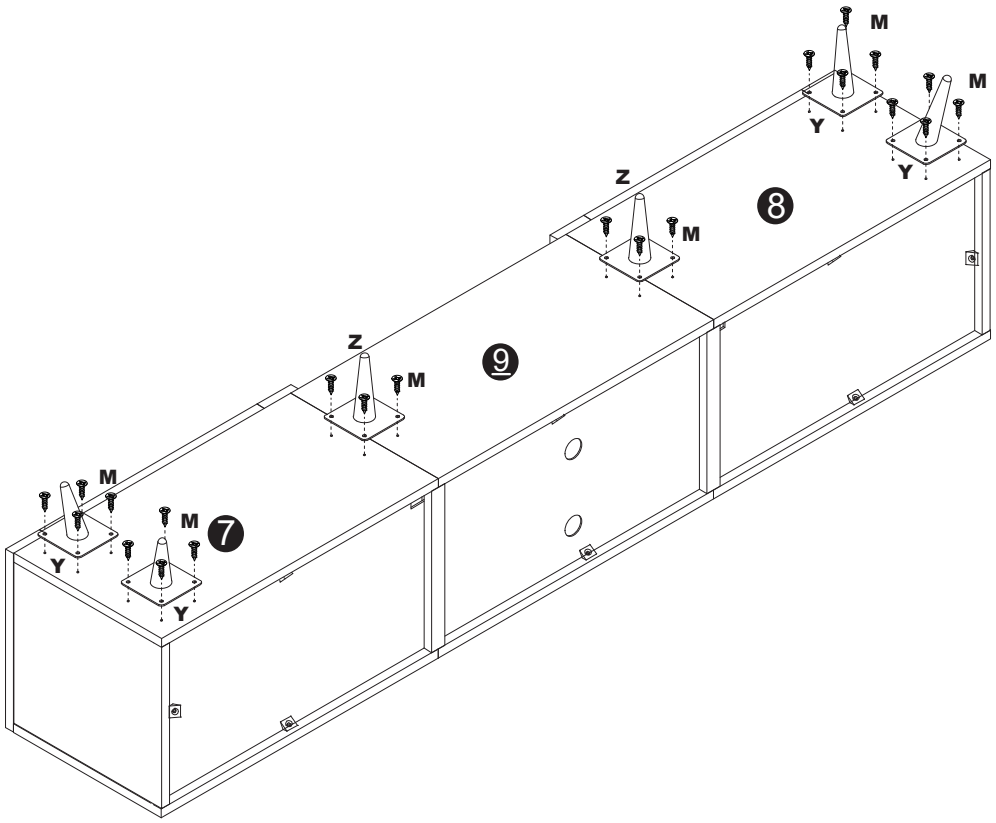

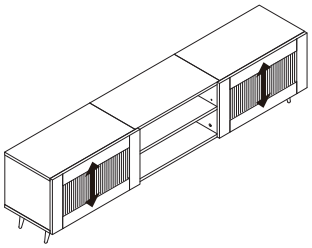

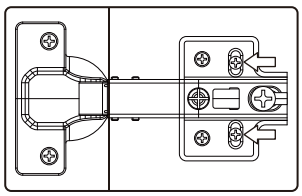

Adjust the screw shown to move the door up or down.

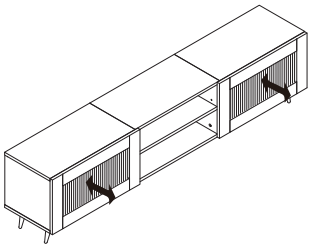

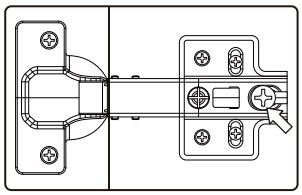

Adjust the screw shown to move the door in or out.

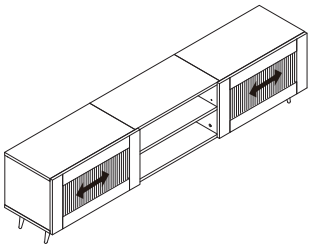

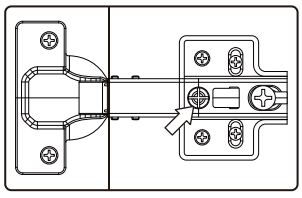

Adjust the screw shown to move the door left or right.

LED LIGHTS OPERATION MANUAL

1 Power on

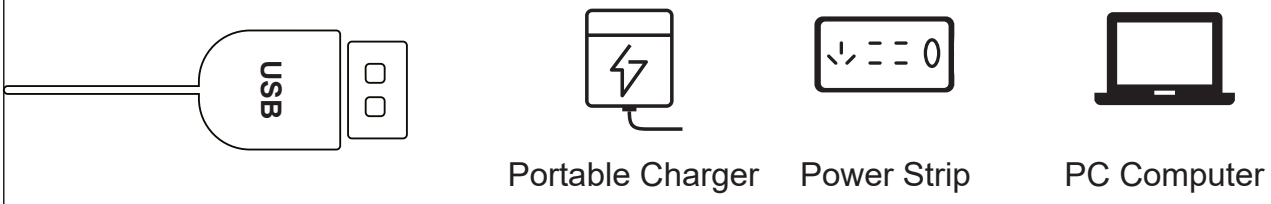

2 Remove the plastic insulation at the bottom of the remote control

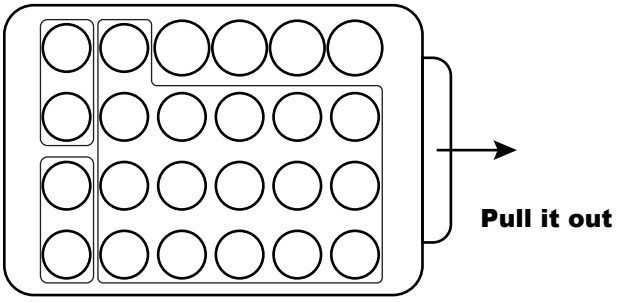

3 Light color and mode

Static red	Static orange	Static dark yellow	Static yellow
Static straw yellov	Static grean	Static pea green	Static cyan
Static light biue	Static sky blue	Static blue	Static dark biue
Static brown	Static pink	Static purple	Static white
7 colorjumpy change	All fade out&fde in	7 color fade changs	3 base colorjumpy

4 Remote control

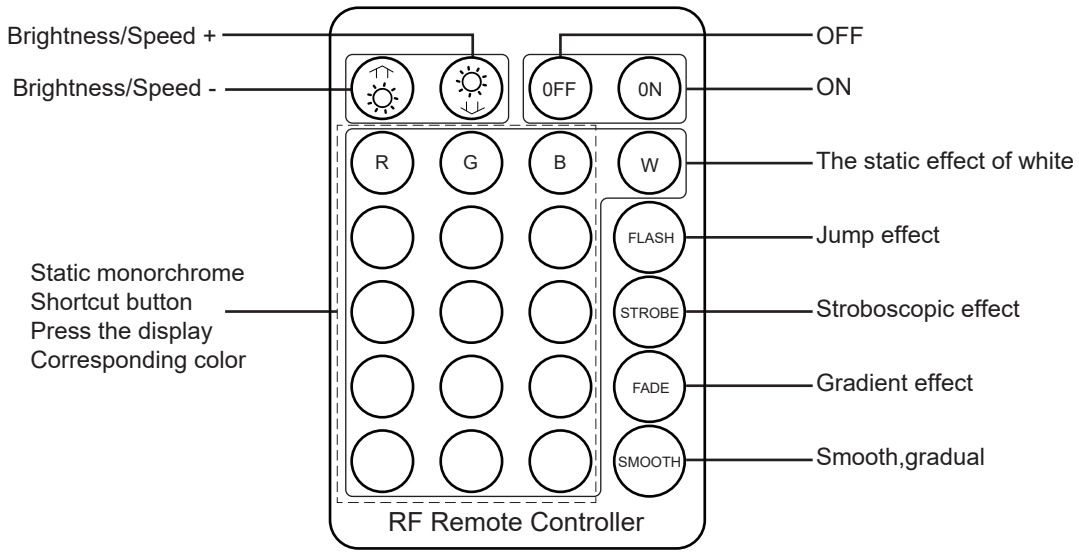

About HedoAjim

HedoAjim break the traditional monotonous furniture style and give it new meaning through LED lights, which are both functional and beautiful. Our professional team provides you with innovative and customized design and attentive service, aiming to meet our customer's specific needs around the world, bringing you high quality furniture and colorful and meaningful life. Since now, we have expanded into the production of a wide variety of LED lighted furniture from living room,bedroom to bathroom.

Your Dream Home is Waiting
Customer Service: US:changyingguoji3@hotmail.com; UK:prochainuk@outlook.com
DE:prochainuk@outlook.com

LIMITED WARRANTY

HedoAjim furniture team would like to improve customer service quality and make your experience smooth.

RETURN/DAMAGE CLAIM INSTRUCTIONS:
1.HedoAjim product is shipped in a single carton box. If you haven't received the package or need to know the tracking of the package,get in touch with us immediately via Amazon message or contact us via US:changyingguoji3@hotmail.com;UK:prochainuk@outlook.com;DE:prochainuk@outlook.com.
2.If the package is damaged, please get in touch with us from the very beginning. Attaching a damaged photo is appreciated.
3.HedoAjim product accepts returns within 30 days without any reason. If you return this item for personal reasons, you must cover the return fee and order processing fee (0- 20% restocking fee based on the invoice price). We will cover the freight if the product has quality issues (not caused by humans).
4.Please keep the original box if you need to return the goods. Please use our return label and do not return it without permission.
5.If you return the product after 30 days of receiving it, we are afraid your return application won't be accepted. We appreciate your understanding.
6.Any damages,defects and parts missings during installation, pls contact us from the very beginning. Replacement,exchange and refund will be arranged ASAP except of personal reasons.

The exceptions or exclusions to this warranty are as follows:
1. HedoAjim does not accept claims outside of a limited period.
2. This warranty does not include the products purchased by mistake.
3. Any damages,brokens,missing parts,HedoAjim will repair or replace them without charging you any cost within a reasonable period. We reserve the right to require damaged parts to be returned to us upon our request.

If you have any questions concerning this warranty, please get in touch with the HedoAjim Customer Service department via Amazon message or US:changyingguoji3@hotmail.com; UK:prochainuk@outlook.com; DE:prochainuk@outlook.com. Be prepared to provide your name, address, daytime phone number, the product's model and purchase order number, the date of purchase, and the store name. All the information you provided will help us track your order quickly and solve your problem in the shortest time. This warranty gives you specific rights, and you still possess other rights that vary in each case.

Hedoljim®

Decorate your home, Brighten wonderful life

US:changyingguoji3@hotmail.com
UK:prochainuk@outlook.com
DE:prochainuk@outlook.com