Assembly Instruction

ITEM # SW24L2221 / Kawaii Sweetheart 1 Door End/Side Table

Version: Sep 01,2025

PARTS	A	B	C	D	E	F				
QTY	1	1	2	1	1	1				

PARTS	H1	H2	H3	H4						
QTY	8	8	4	1						

STEP 1

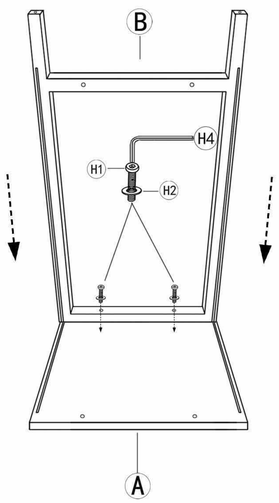

STEP 2

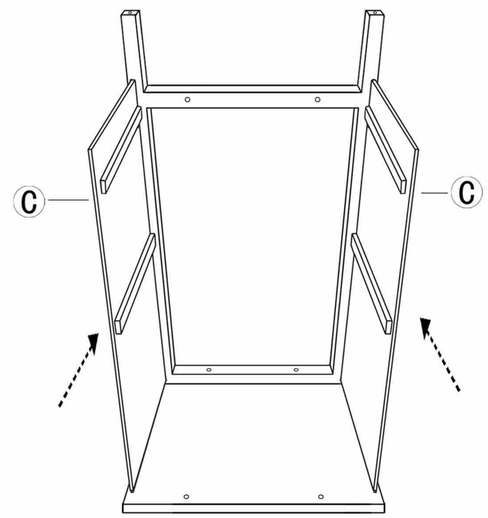

STEP 3

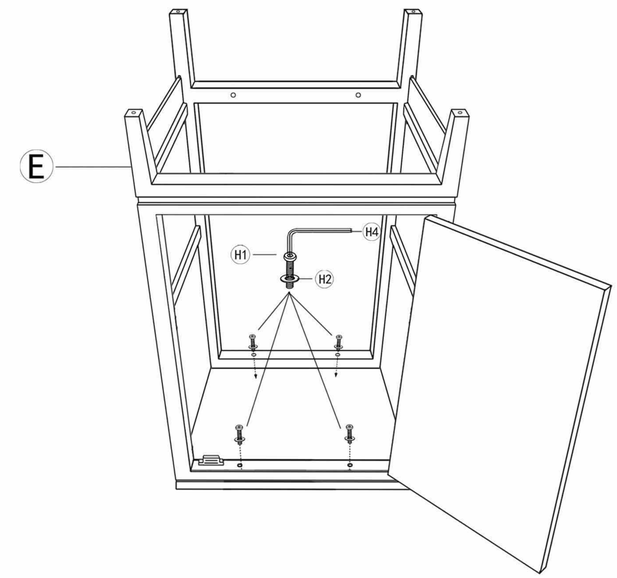

STEP 4

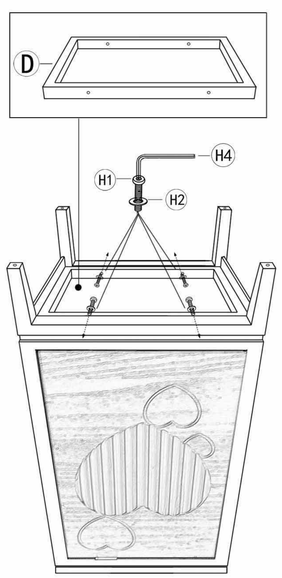

STEP 5

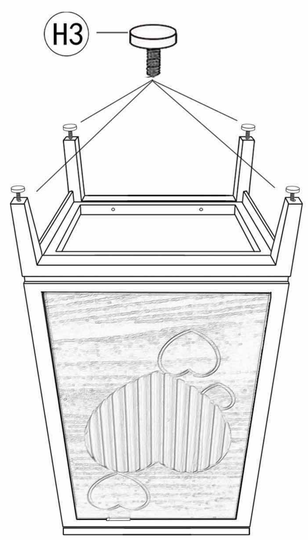
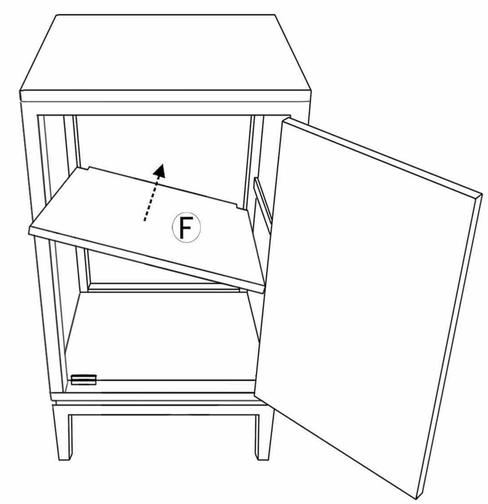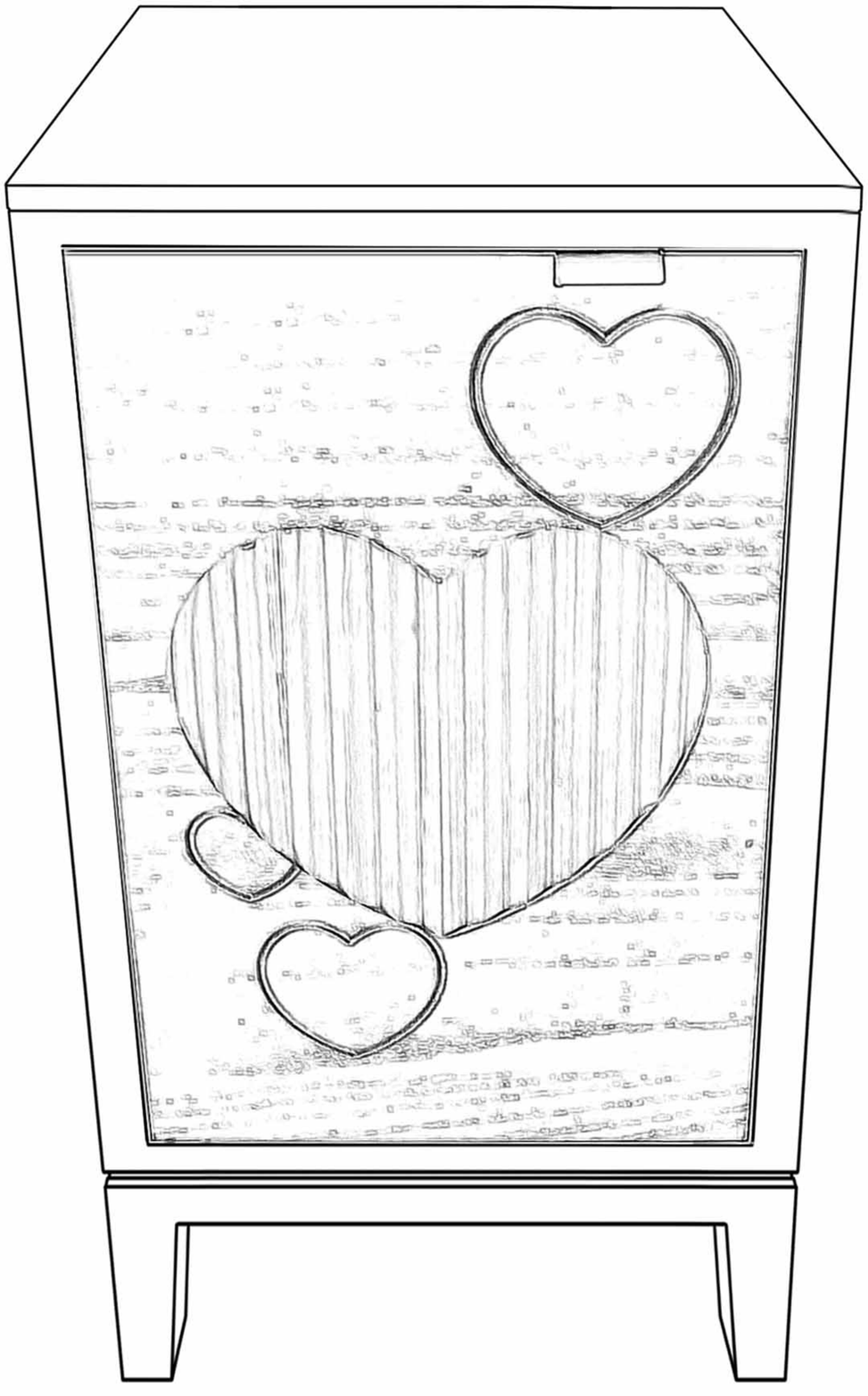
STEP 6