INSTALLATION INSTRUCTIONS

PARTS LIST

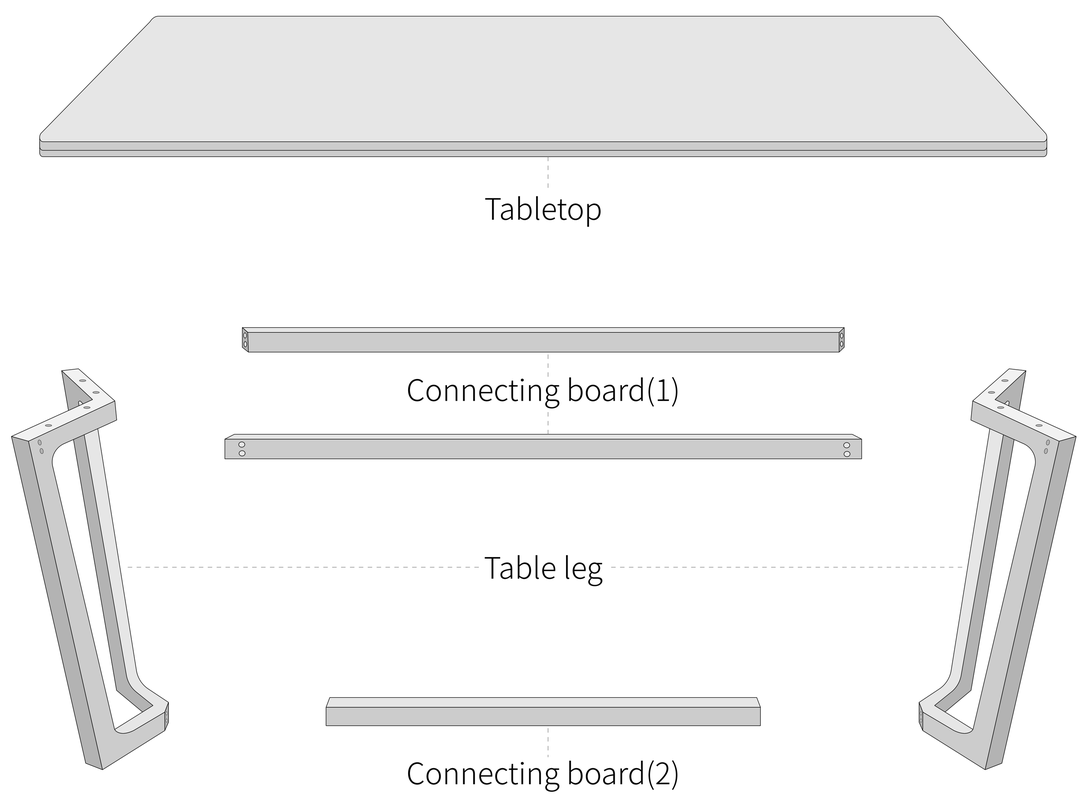

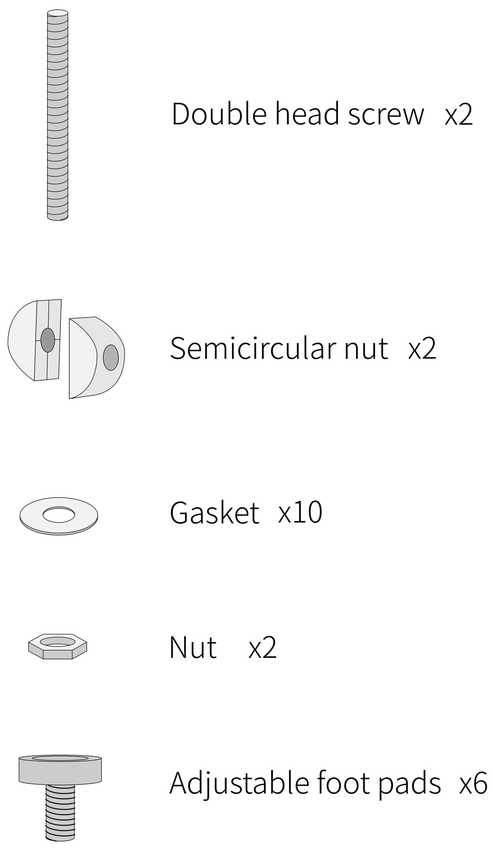

STEP 1

Place the bottom of the table legs facing up.
Assemble the Connecting board and table legs together.
Double head screw is used between Connecting board(2) and table legs

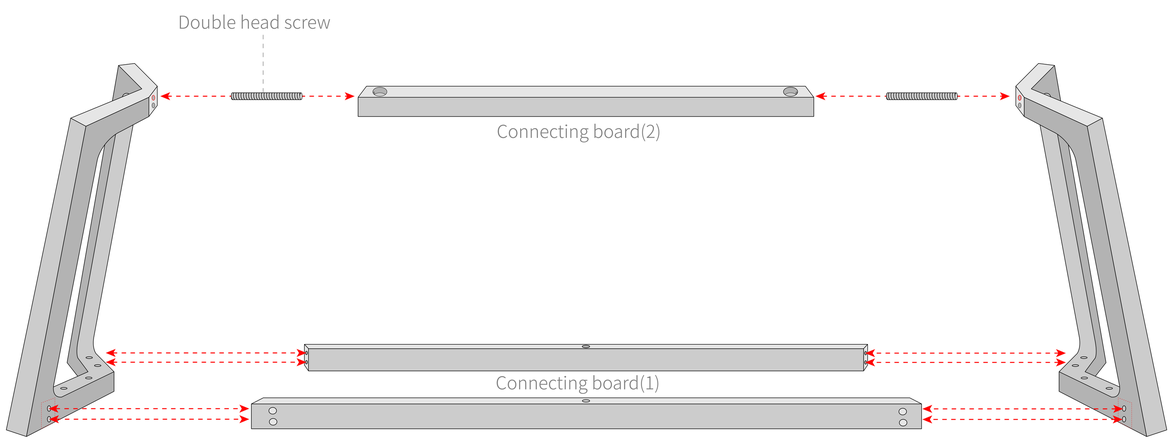

STEP 2

Fasten the Connecting board with Semicircular nut and nut and gasket (2).
Secure tight connecting boards (1) and (2) with long screws

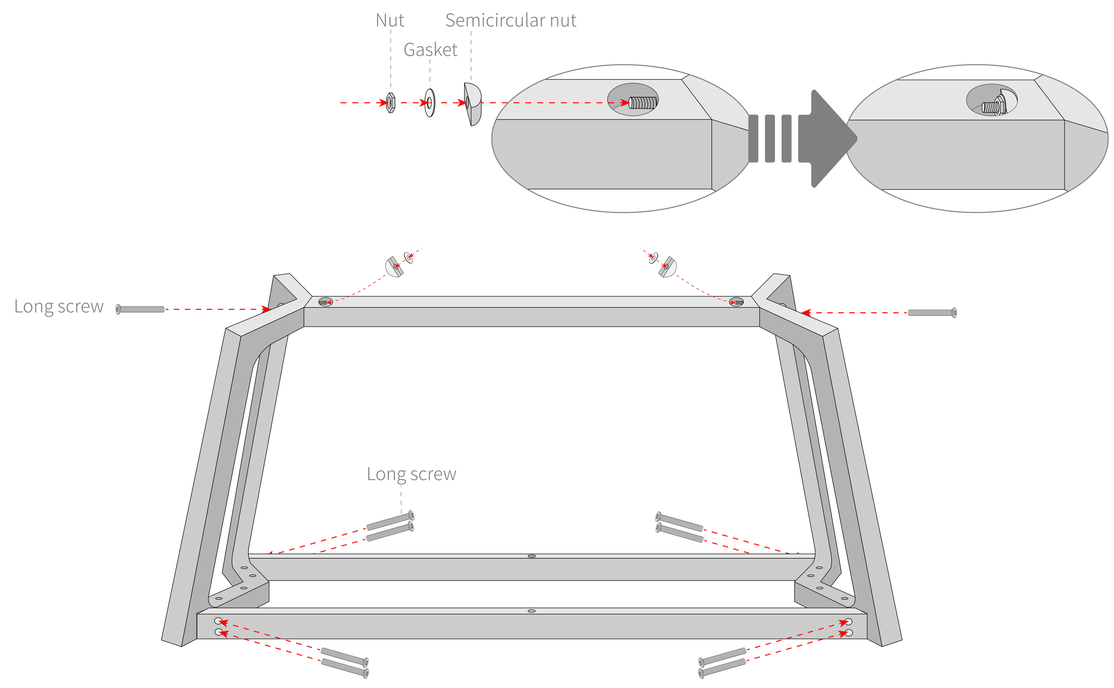

STEP 3

Place the legs on the back of the table top

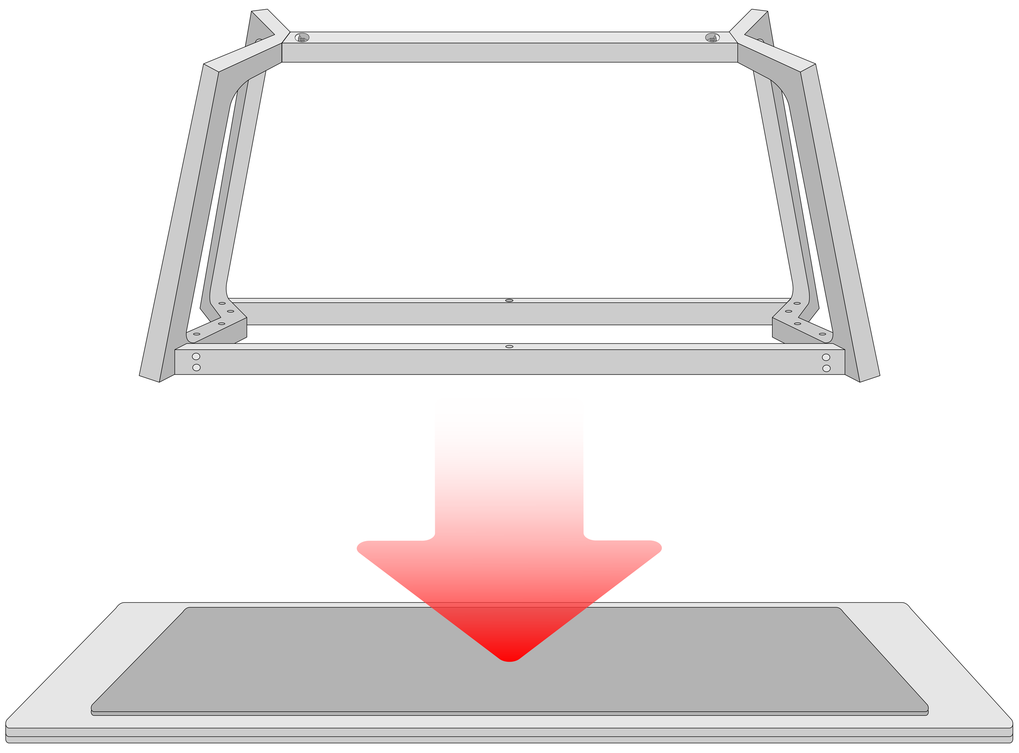

STEP 4

Secure with short screws and gaskets

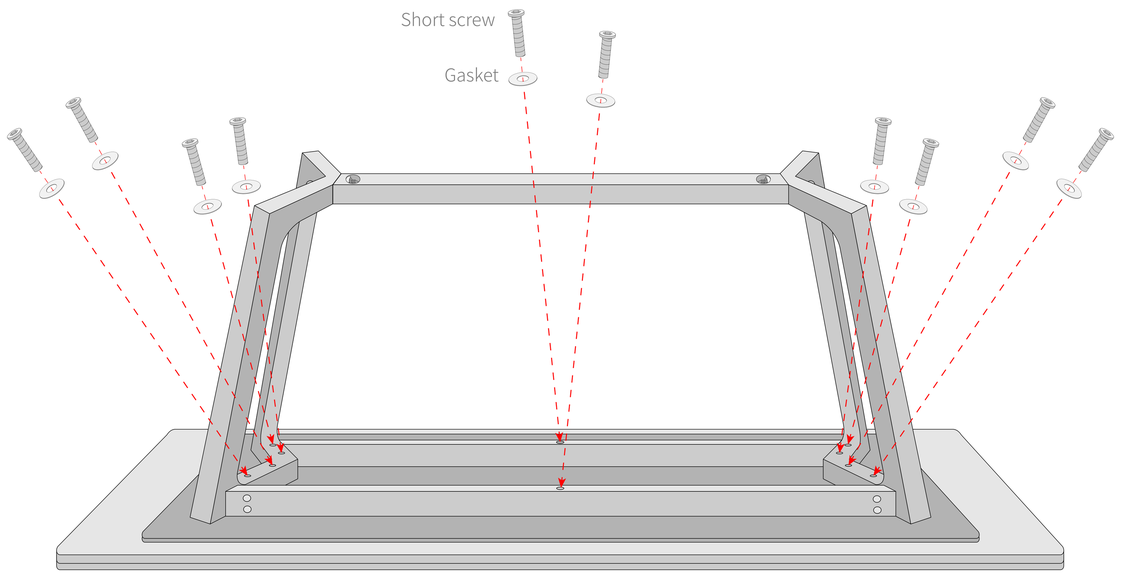

STEP 5

Install adjustable foot pads on the bottom of the table legs

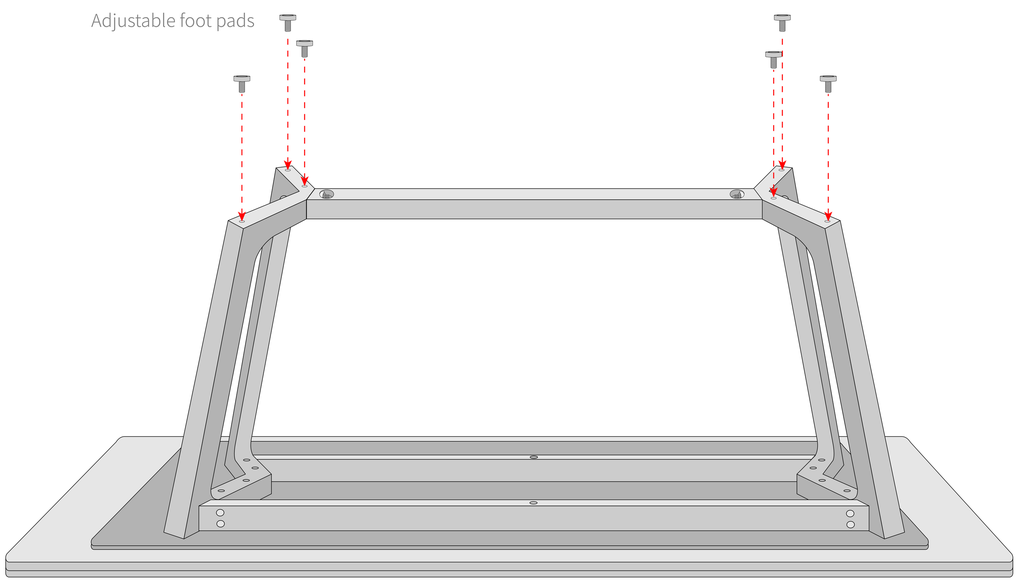

INSTALLATION COMPLETE

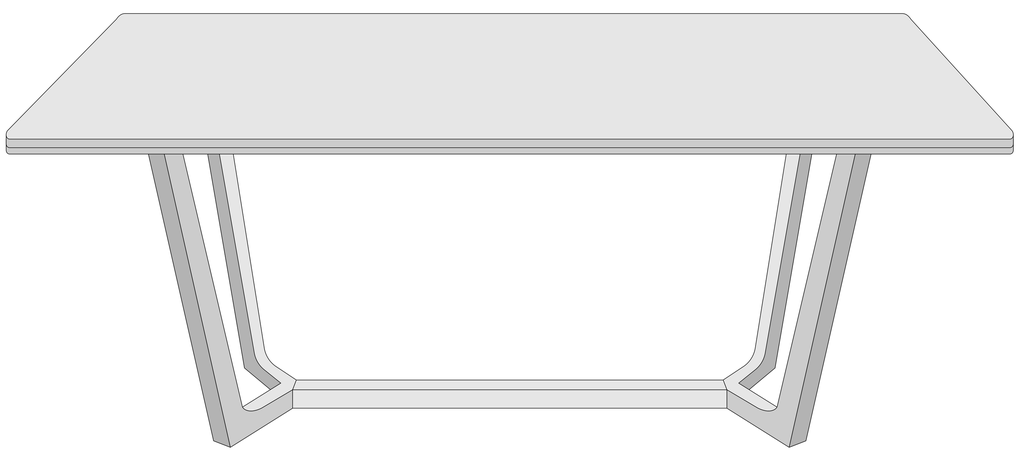

MARBLE CLEANING. MAINTENANCE. PRECAUTIONS

· REGULAR CLEANING:
The marble floor should be cleaned with special cleaning agents to avoid damaging the surface structure. In general, a neutral cleaner, such as alcohol or warm water, should be used and then wiped with a clean cloth to maximize the cleaning of the surface

· DECONTAMINATION:
To remove dirt on the marble floor, you can use a one-time wet, and then rinse it off with water. If there is oil, you can use dish soap, but be careful not to use too much, so as not to damage the floor structure

· MAINTENANCE:
The marble floor should be regularly maintained with paraffin wax to increase the surface light, and to effectively protect the surface from pollution erosion. In addition, it is also important to polish the ground regularly to maintain the finish and water resistance of the ground.

· NOTE:
When cleaning, note: do not use detergent containing acid components, do not use metal or other hard objects to clean the marble floor, so as not to wear the surface