# 42*84 inch Hidden Barn Door Installation Manual

YCM12-42x84IN+HD

Any question please contact us:
**support@jubest.com**

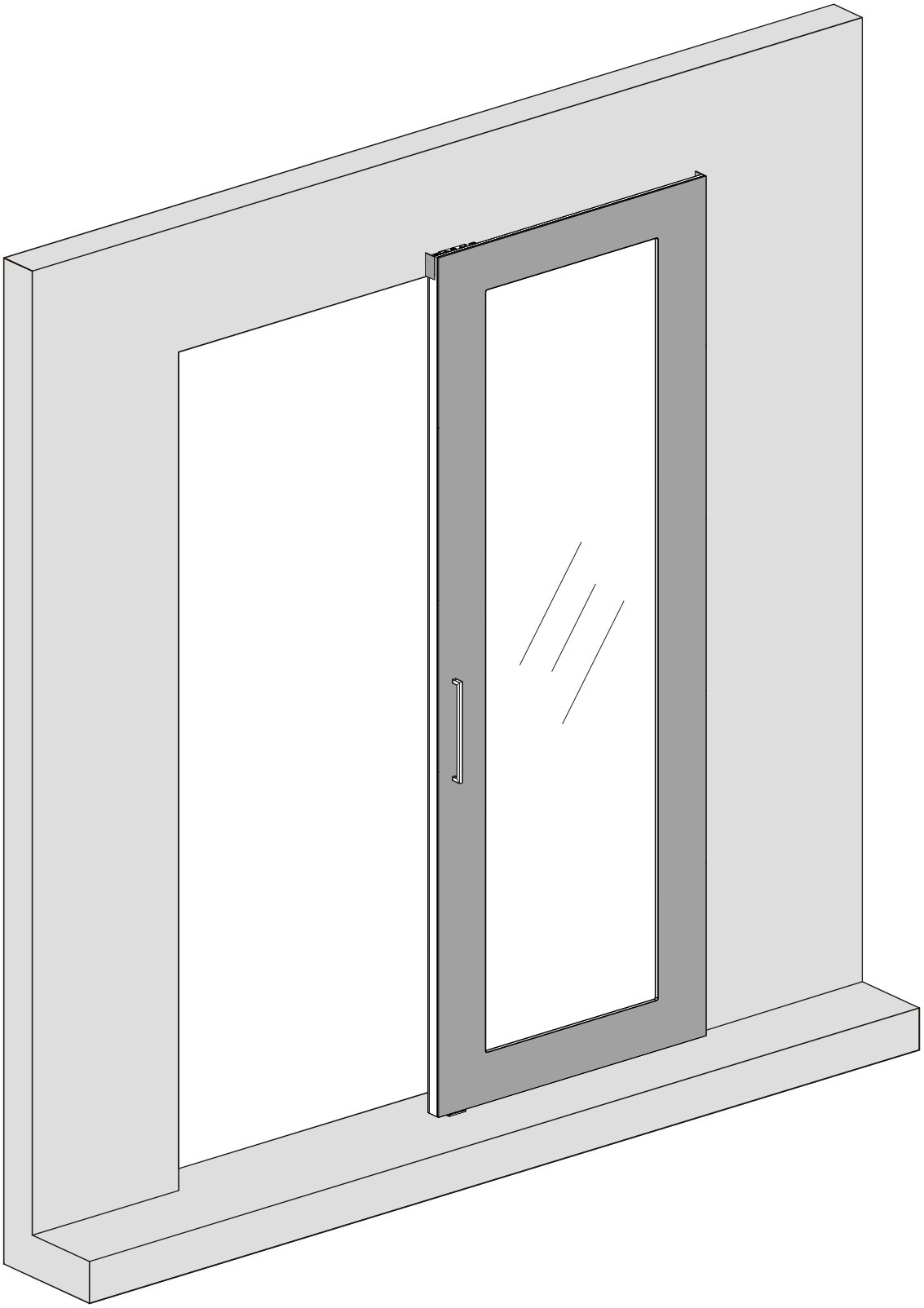

# TOOLS REQUIRED

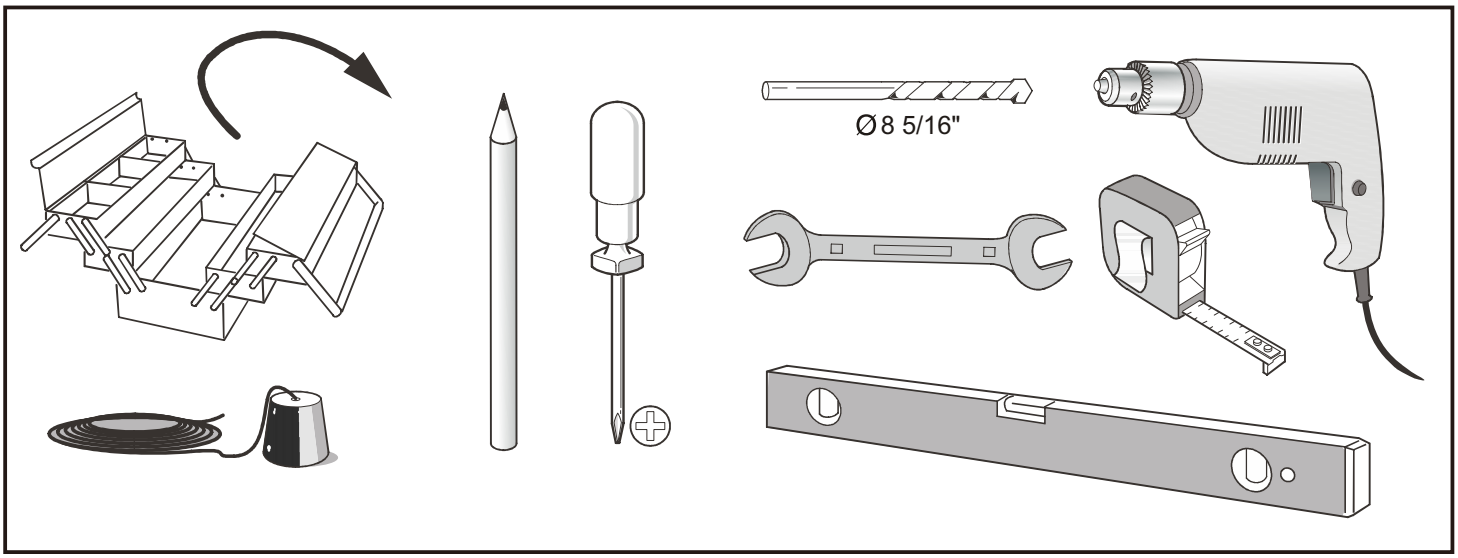


# WHAT IS IN THE BOX

**A** Adjustable top roller

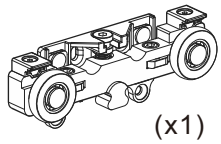

(x1)

(x4)
ST 11/64"x1 31/32"
(4.2mmx50mm)

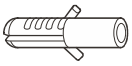

(x4)
Ø5/16"
(8mm)

**B** Soft close kits

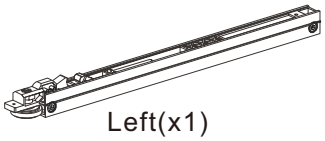

Left(x1)

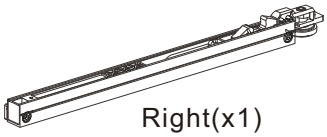

Right(x1)

**C** Sliding track

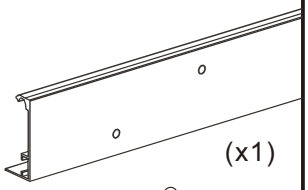

(x1)

(x10)
ST 9/64"x33/64"
(3.5mmx13mm)

**D** End caps for track

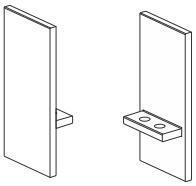

(x1) (x1)

(x2)
ST 7/64"x3/8"
(2. 9mmx9. 5mm)

**E** Bottom roller

(x2)

(x4)
ST 11/64"x63/64"
(4.2mmx25mm)

**F** Bottom guide channel

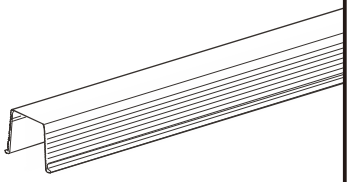

(x1)

**G** Floor mounted guide

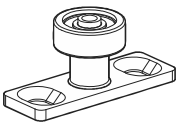

(x1)

(x2)
ST 3/16"x1 1/2"
(4.8mmx38mm)

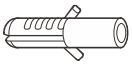

(x2)
Ø5/16"
(8mm)

**H** Flush pull

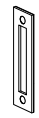

(x1)



(x1)

(x2)
ST 7/32"x63/64"
(5.5mmx25mm)

(x2)
ST 11/64"x1 1/4"
(4.2mmx31.7mm)

**I** Spacer

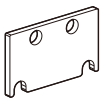

(x1)

**J** Door slab

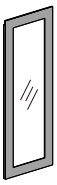

42"x84"
(1067mmx2134mm)

(x1)

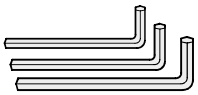

(x1)

Door opened position

Door closed position

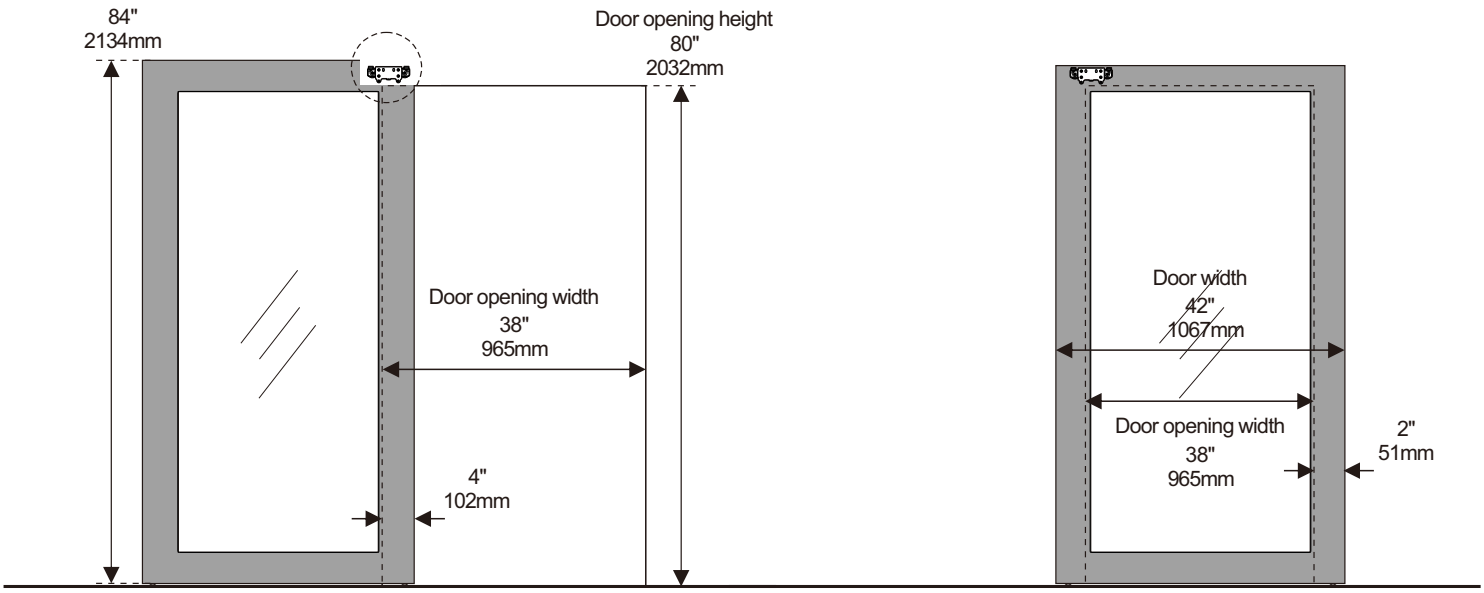


fits 38*80 or 40*80 inch door opening, please consult with us before installation if you have other sizes of door opening

Door opened position

Door closed position

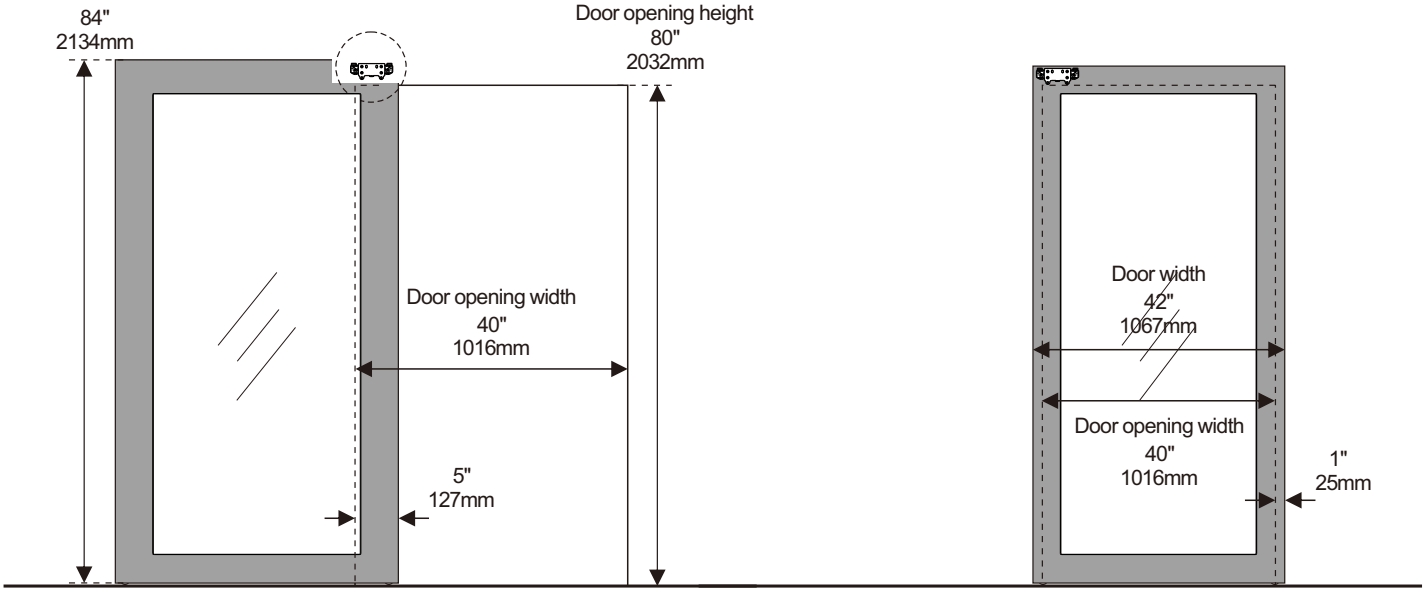

# Section drawing

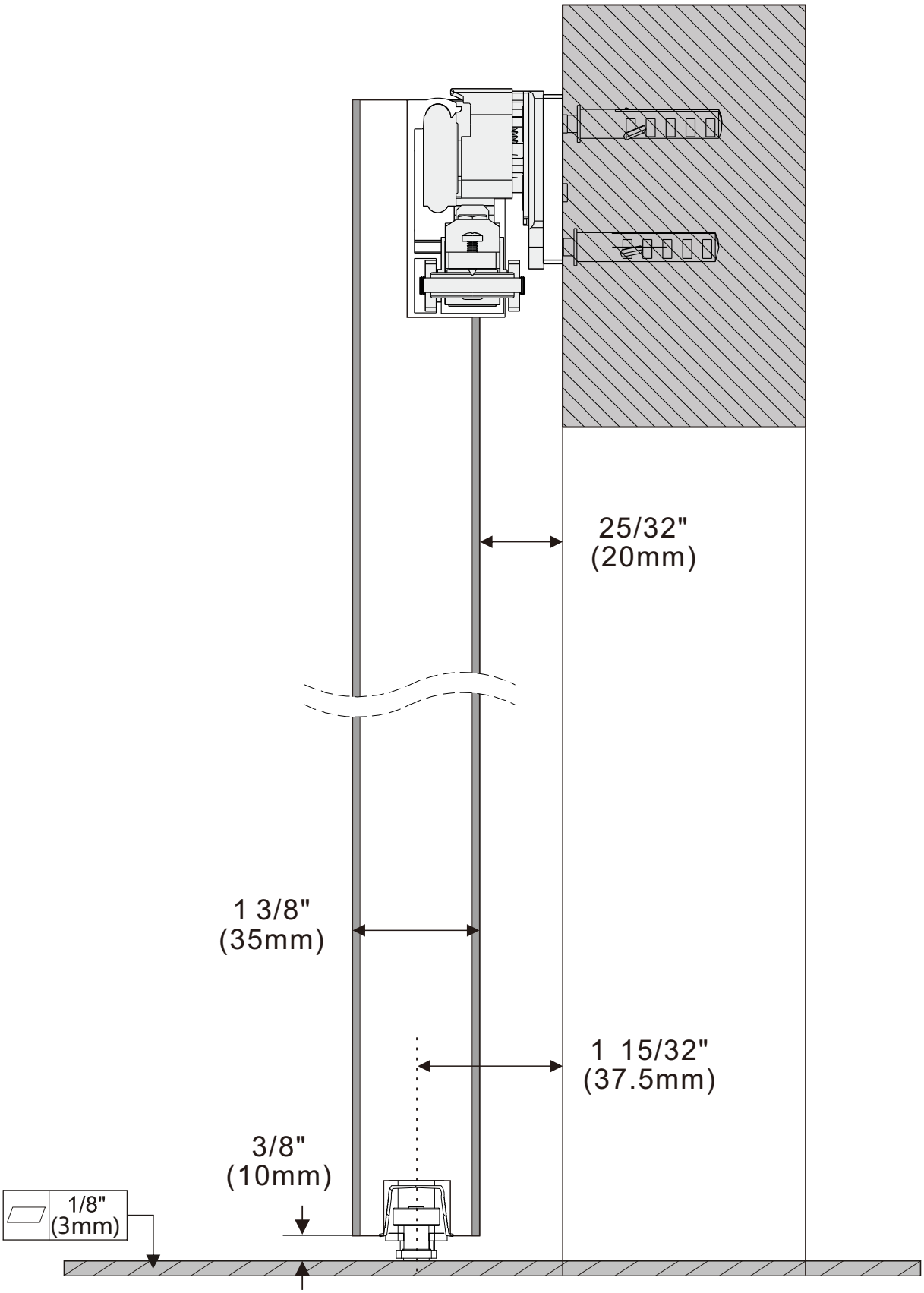

## 1 Mount aluminum track (C)on door (J)

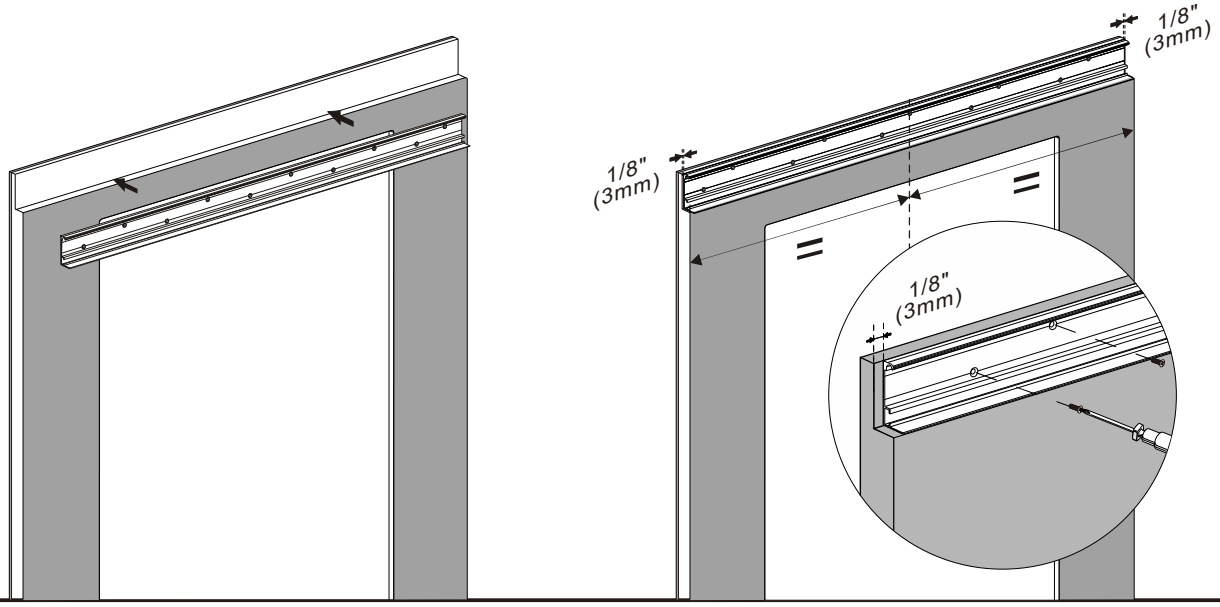


## 2 Mount soft close kits(B)

① Activate soft close devices by hand

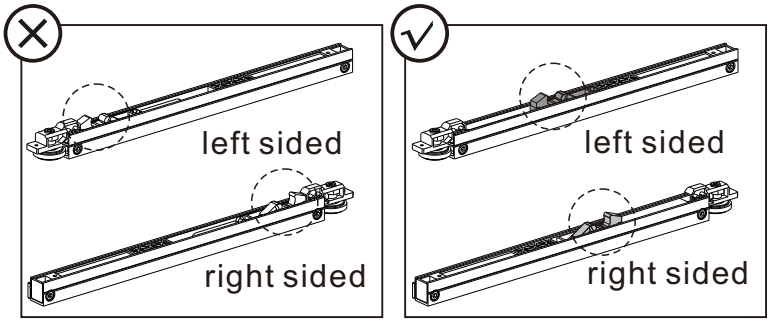


② Loosen screw on both ends of soft close device

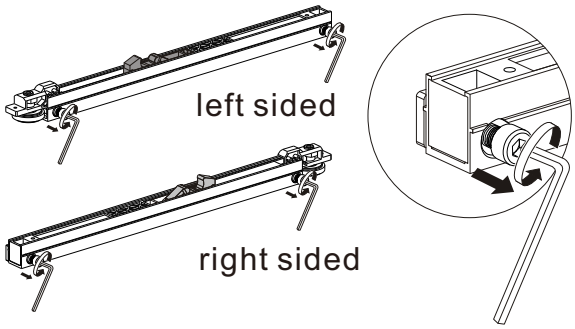


③ Slide both left sided and right sided soft close devices in the track(C)

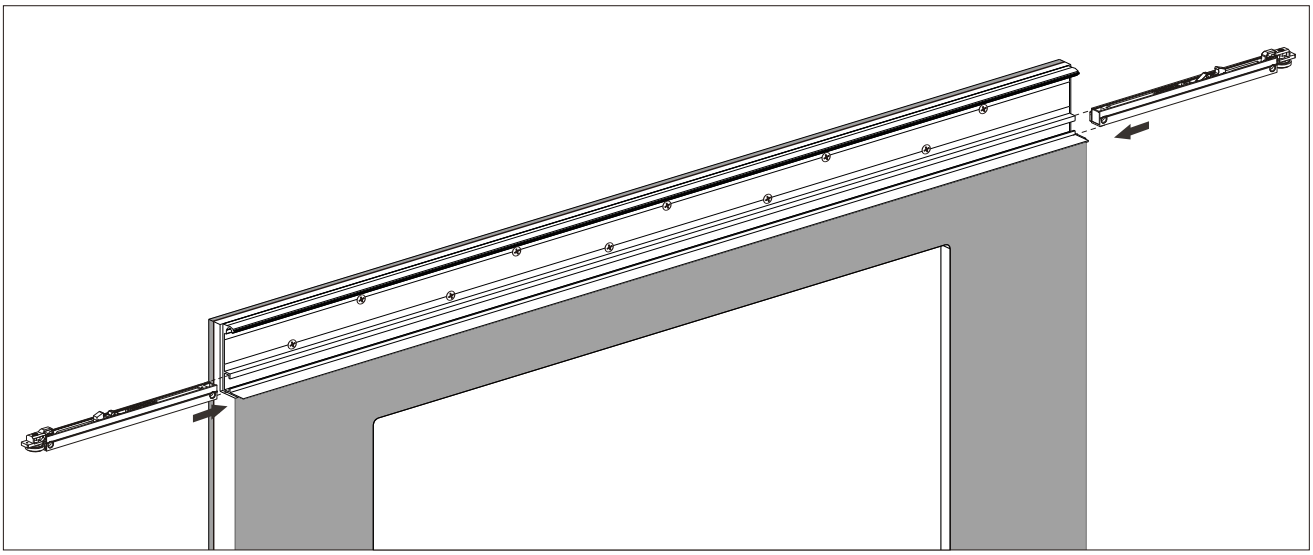

④ Ensure it is flush with the end of track(C) and fasten the screw

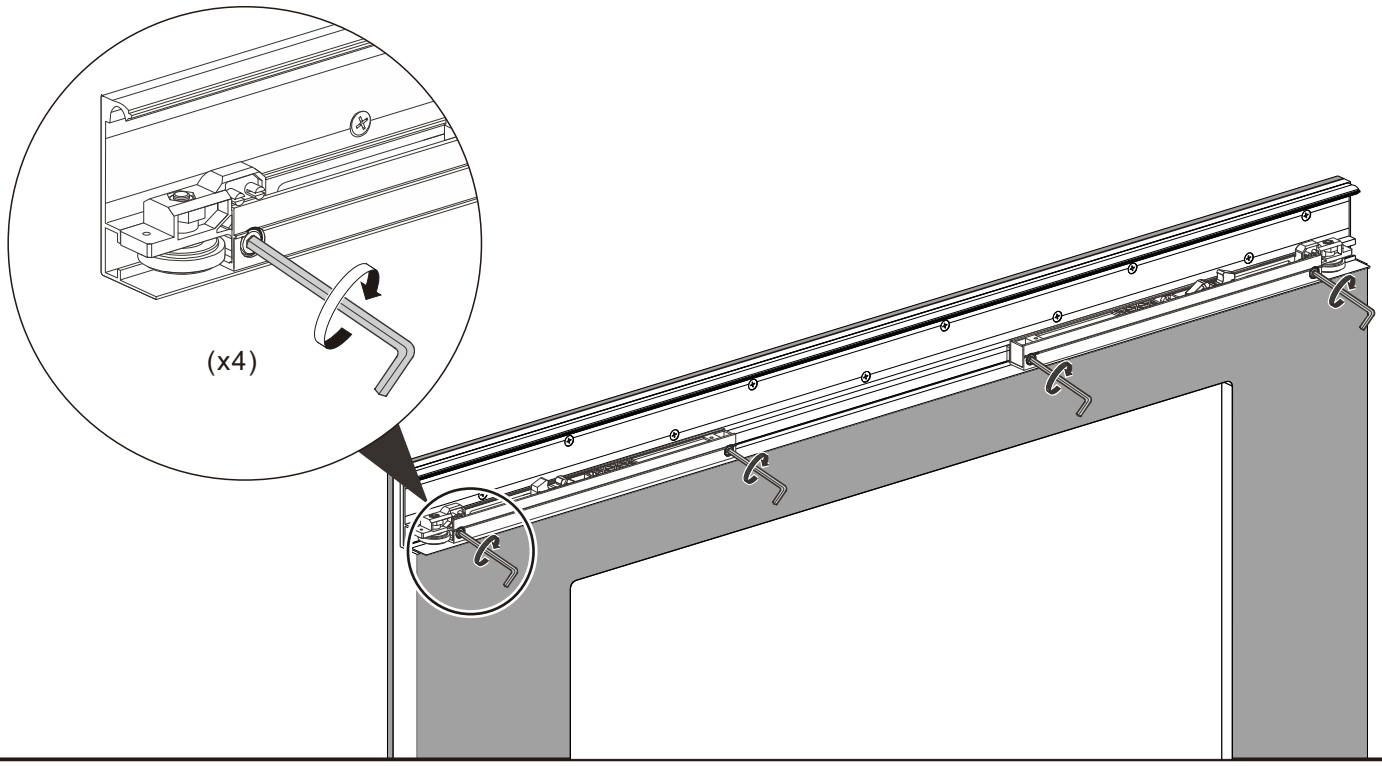


## 3 Fasten caps(D) onto both ends of track

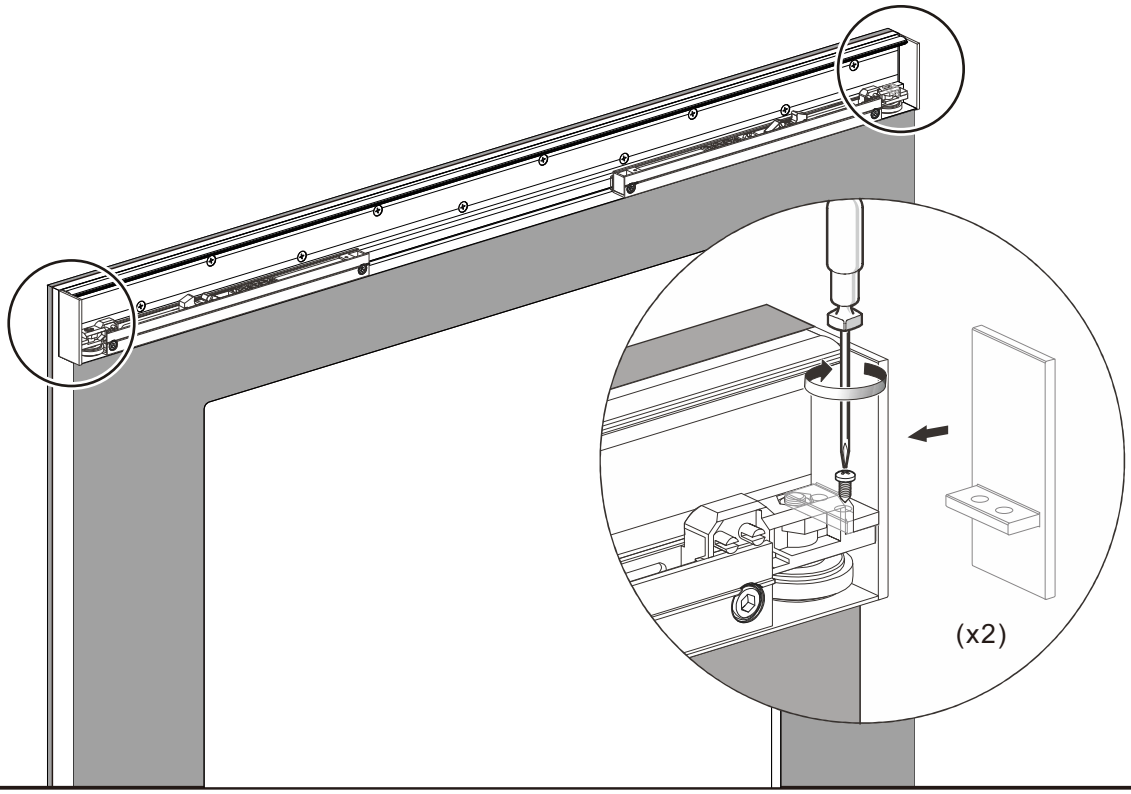

## 4 Install bottom roller(E) and guide channel(F) inside the slot of door slab(J)

① Remove the wheel from the case

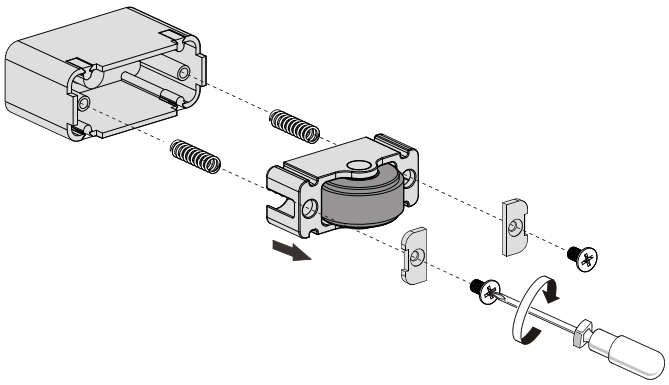

② Fasten bottom roller case inside the bottom of door slab

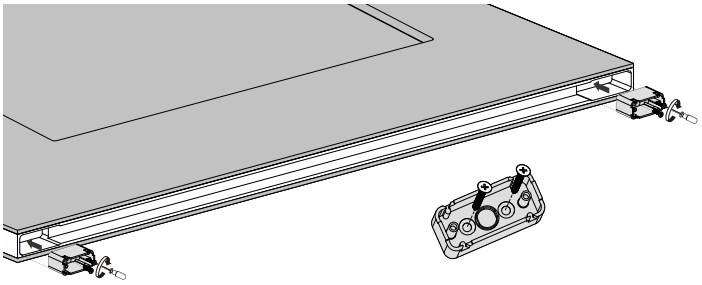

③ Fasten the wheel inside the case

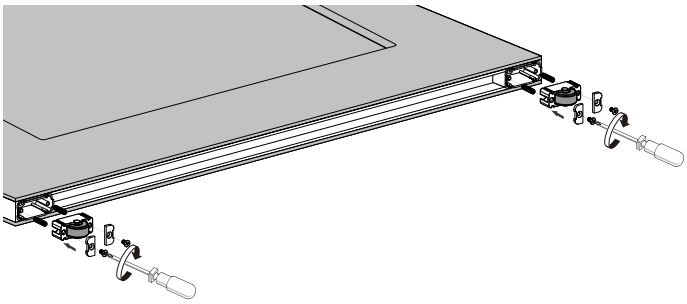

④ Press fit guide channel inside the slot

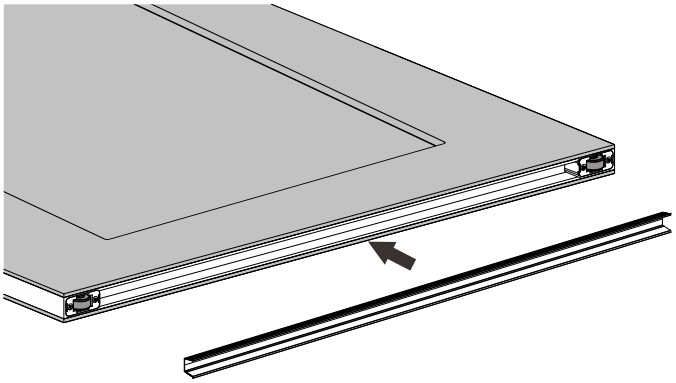

## 5 Mount adjustable top roller(A) and mount floor guide(G)
NOTE: top roller assembly must be installed into wall blocking.

Door opening size:38x80"

① Loose the screw and remove anti-jump block

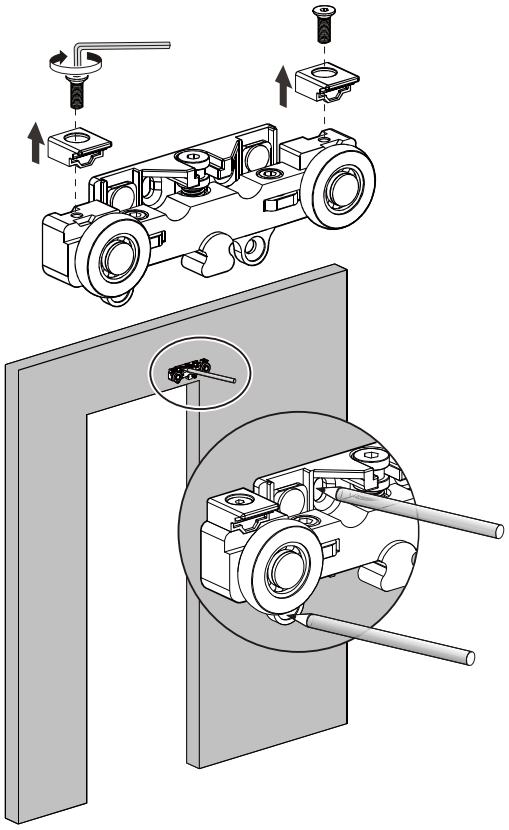

② Fasten the top roller onto wall through spacer(I)

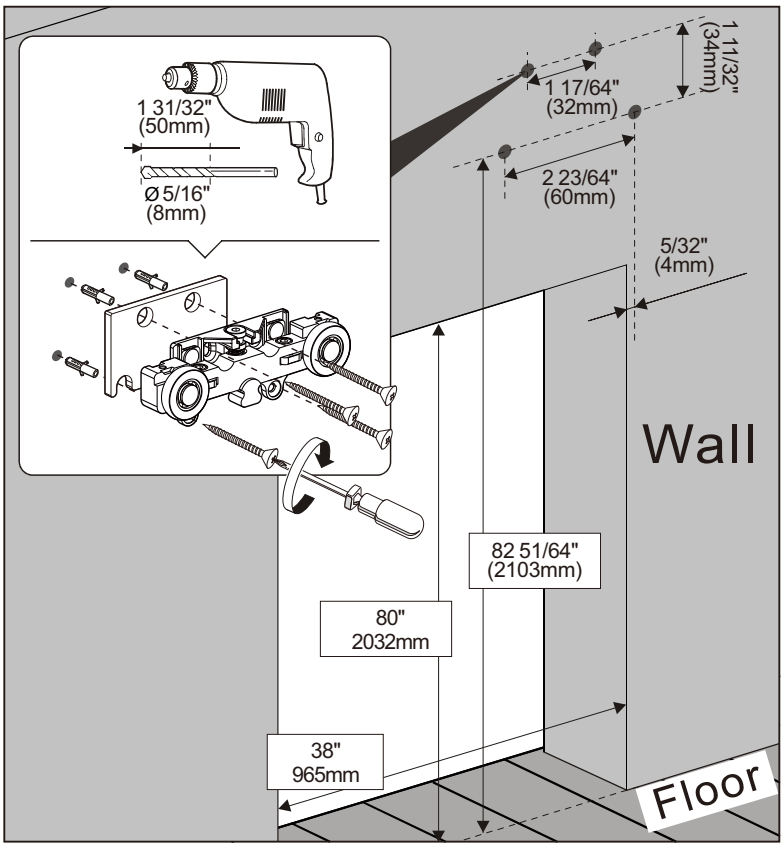


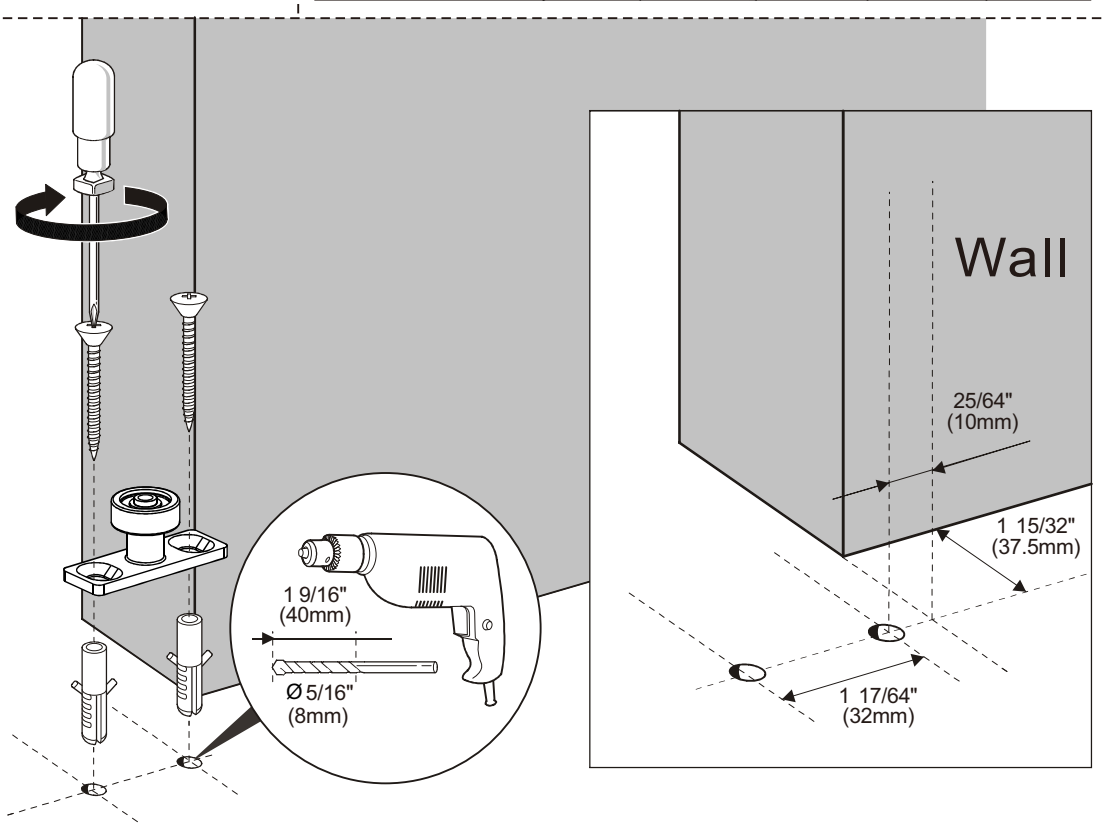

## 5 Mount adjustable top roller(A) and mount floor guide(G)
NOTE: top roller assembly must be installed into wall blocking.

Door opening size:40x80"

① Loose the screw and remove anti-jump block

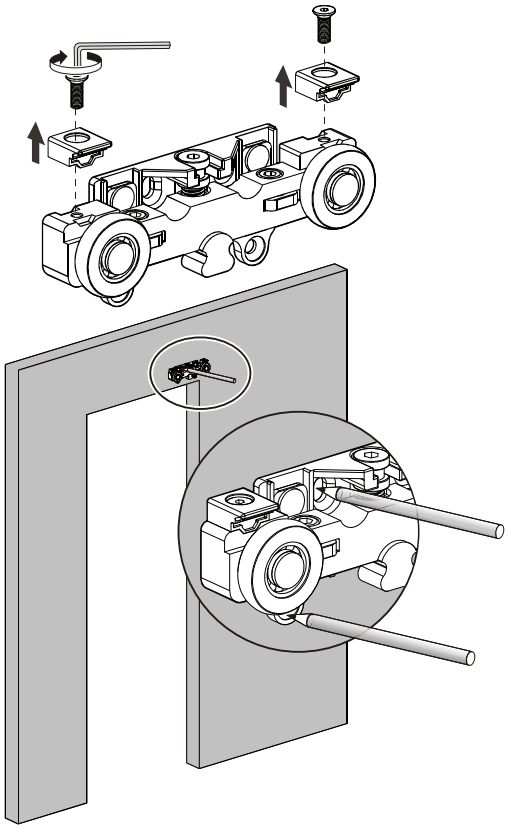

② Fasten the top roller onto wall through spacer(I)

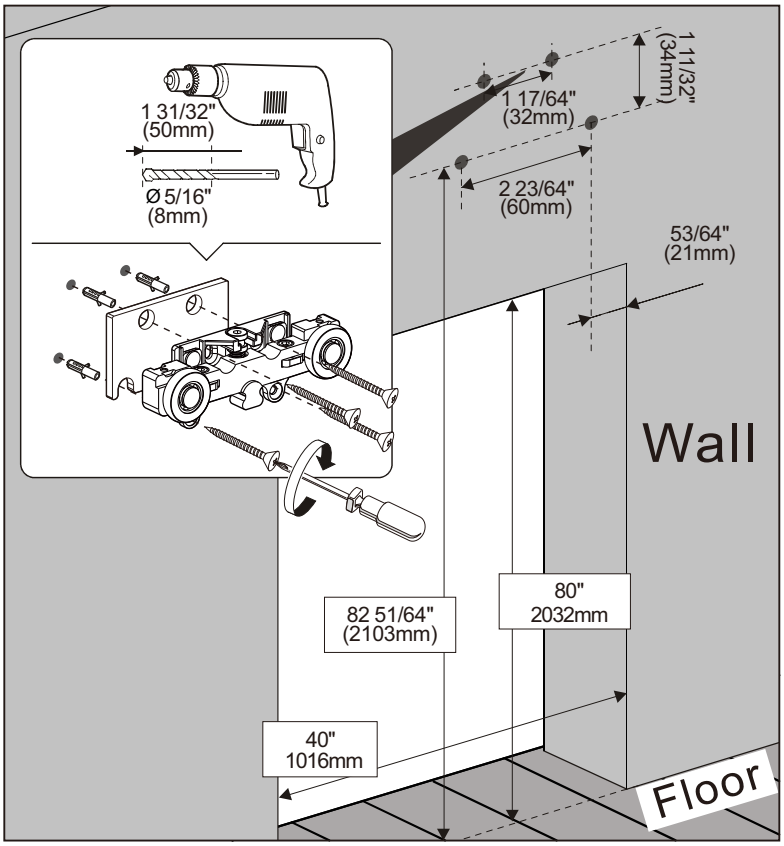


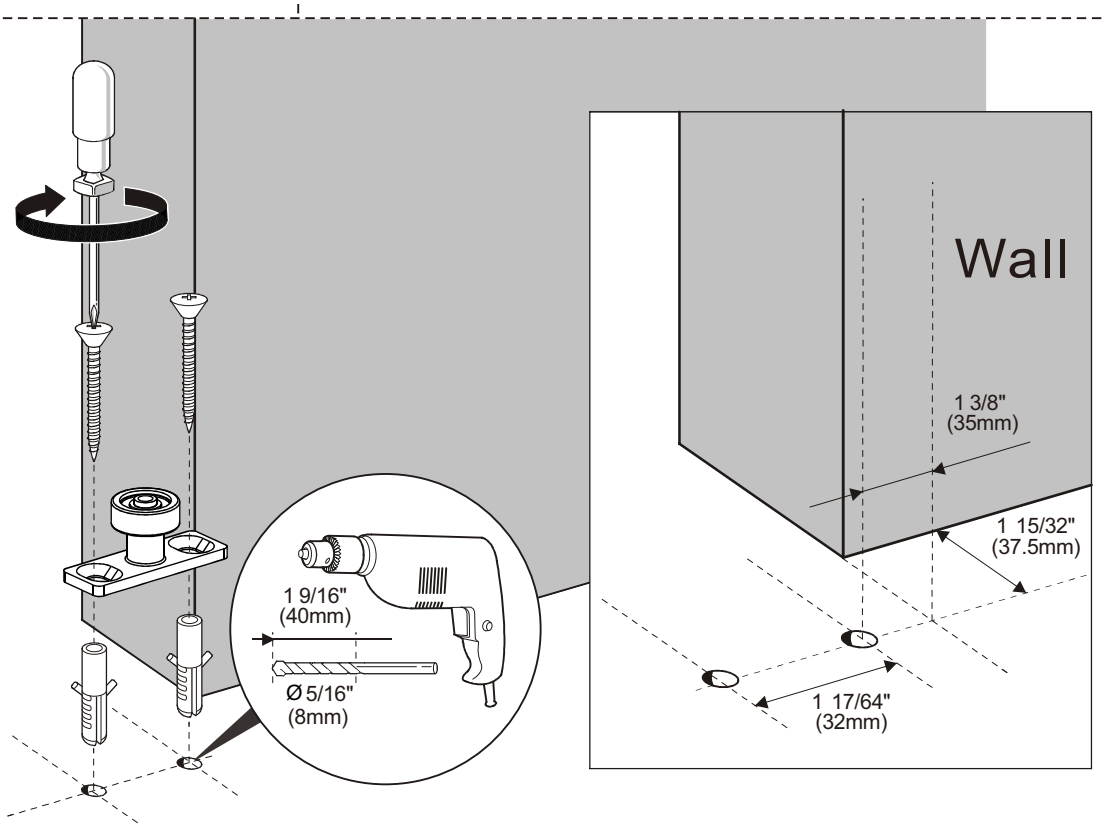

## 6 Install door slab(J) onto top track(C) and slide the door slab to ensure top roller(A) is at the center of track(C) horizontally

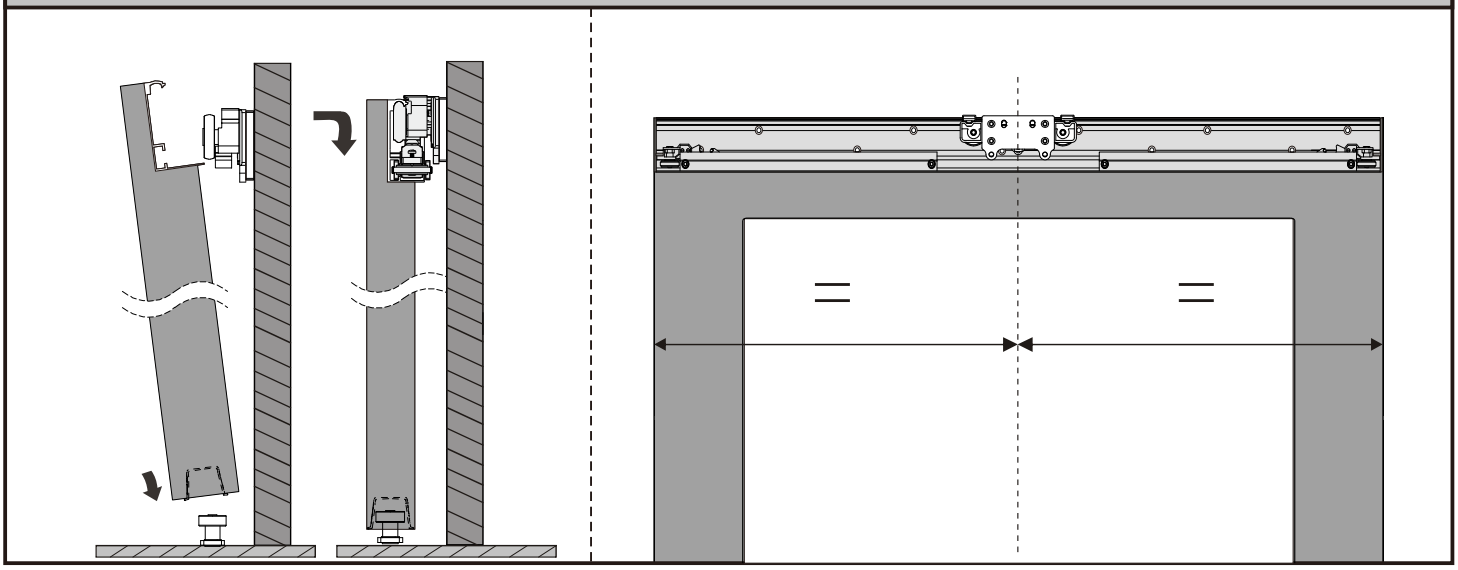

## 7 Fasten the screw to adjust the hanger height to ensure wheel touches the upper inside of track

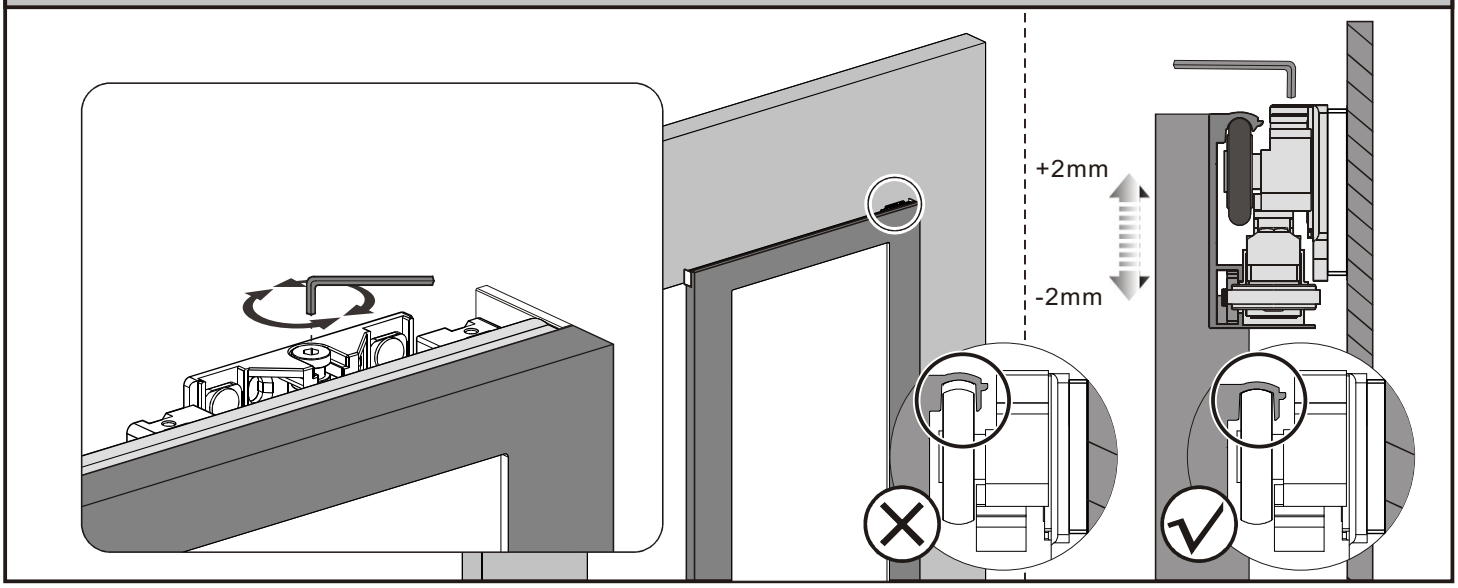


## 8 Tighten the anti-jump block

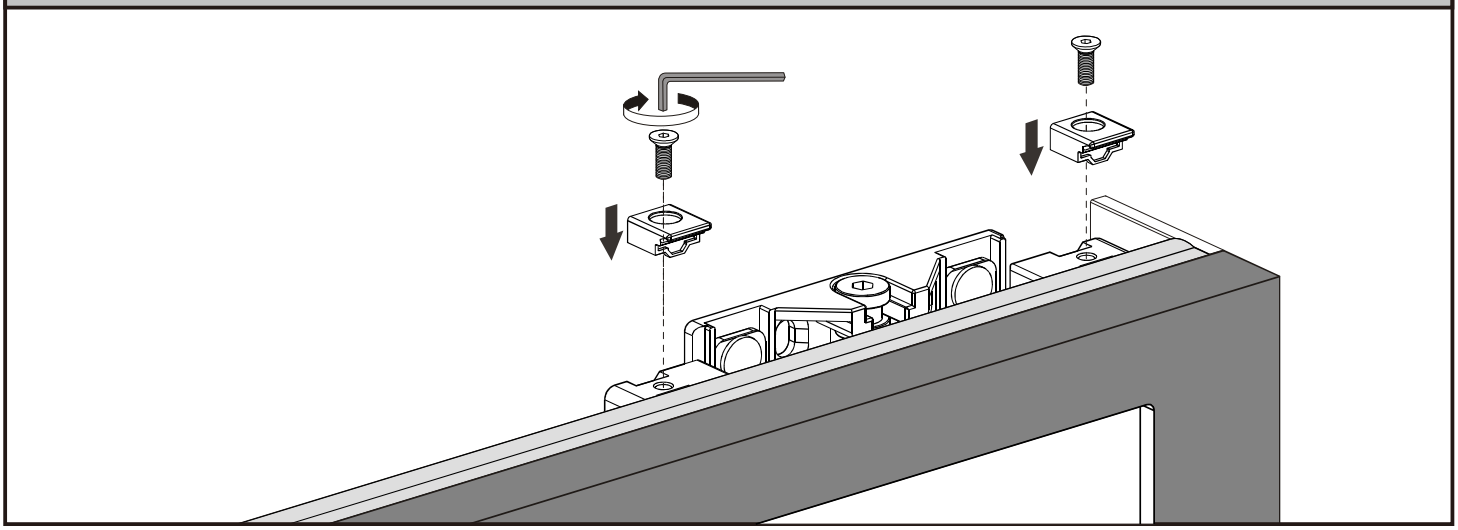

## 9 Slide the door slab both left and right to ensure actuator is in between the fin of soft close device

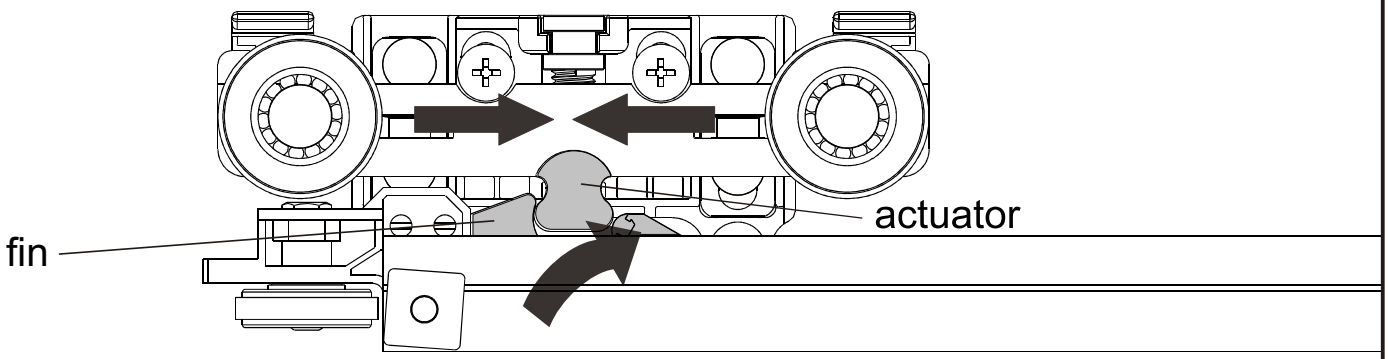


## 10 Adjust the tightness of the screw to ensure door slab(J) is parallel with wall

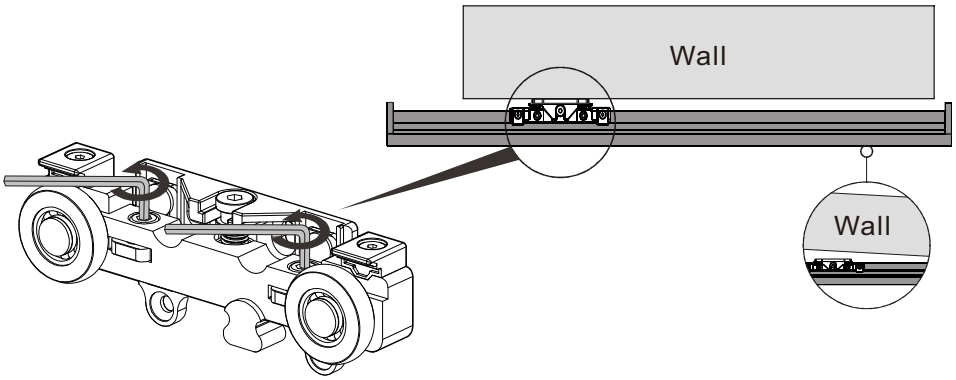


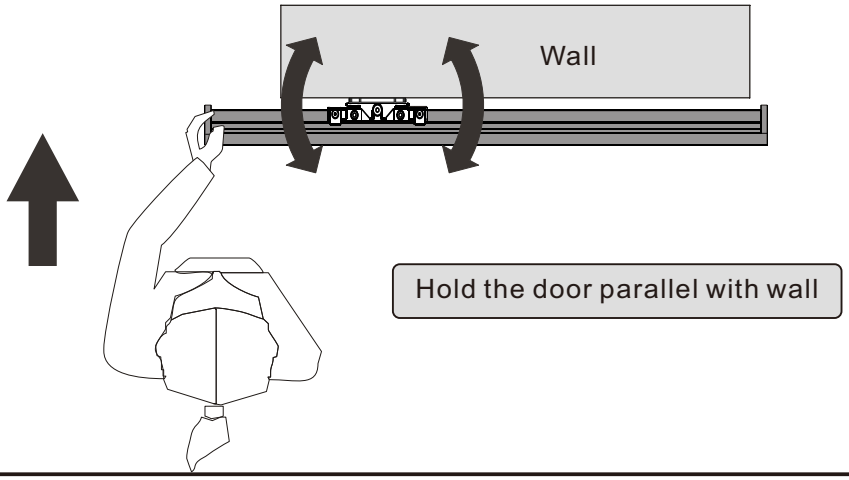


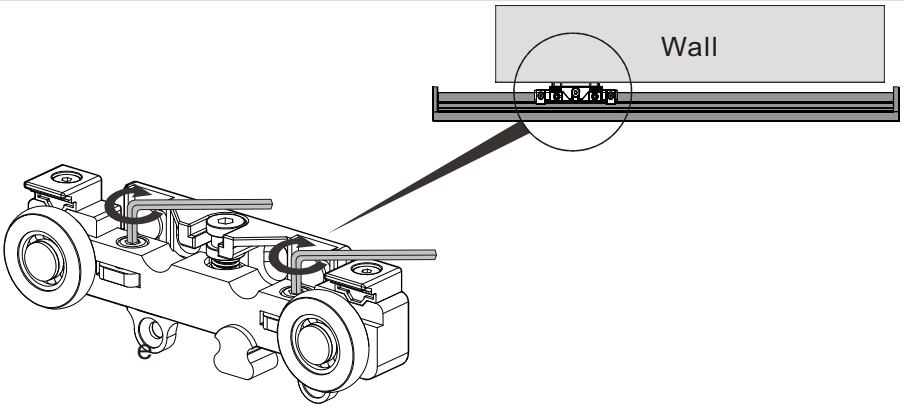
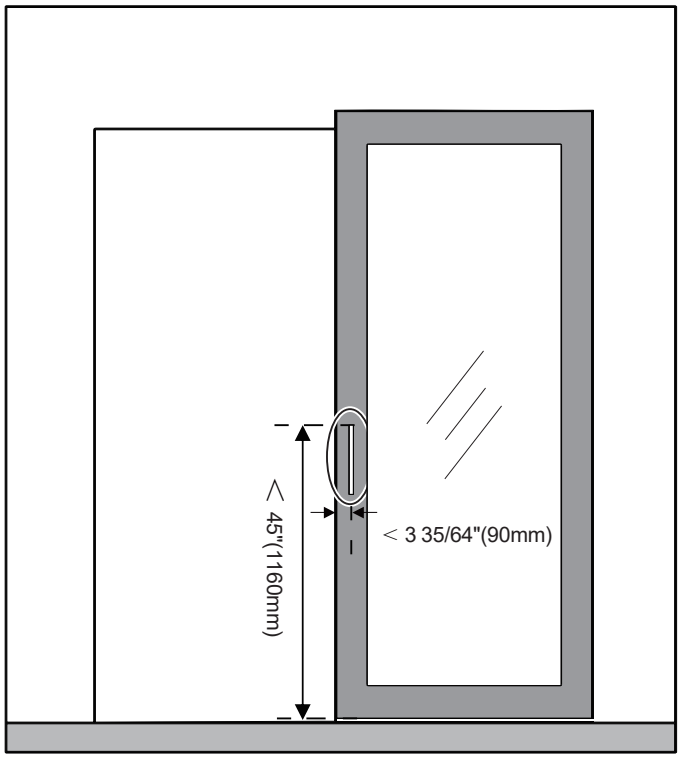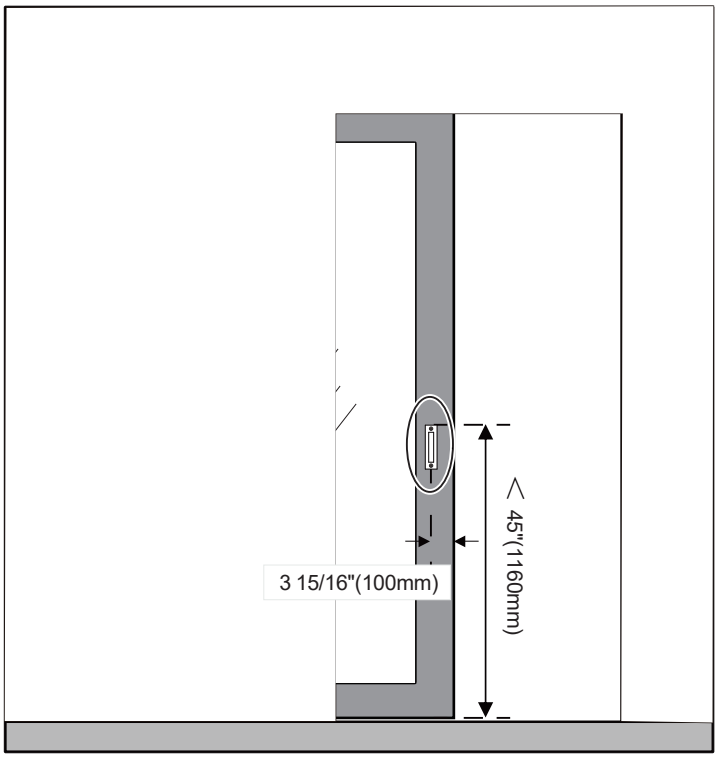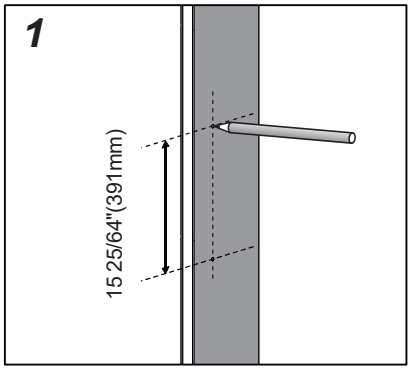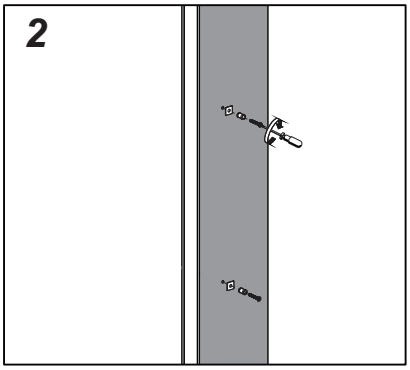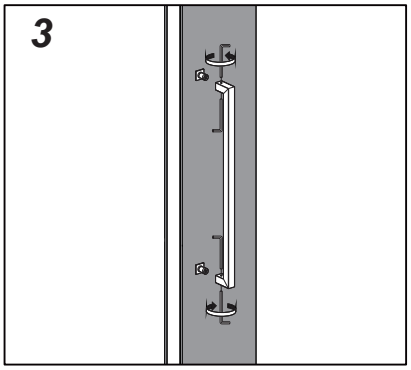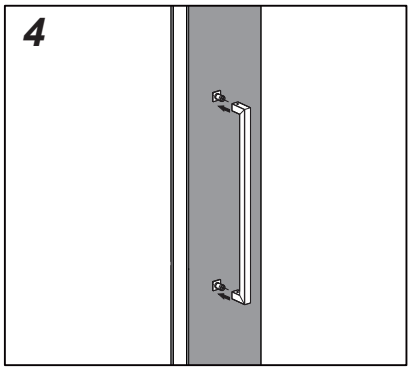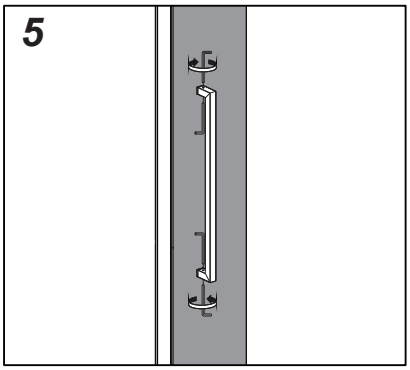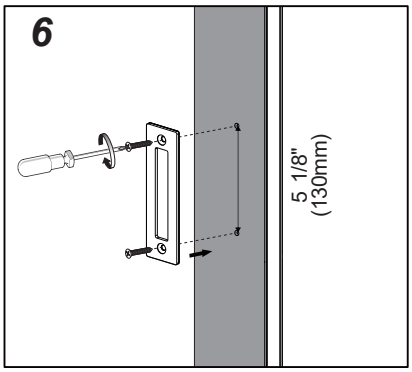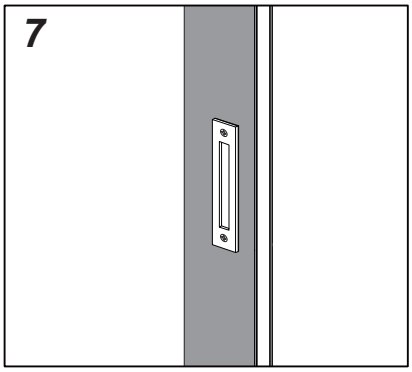
## 11 install flush pull(H) onto both sides of door slab(J)