®

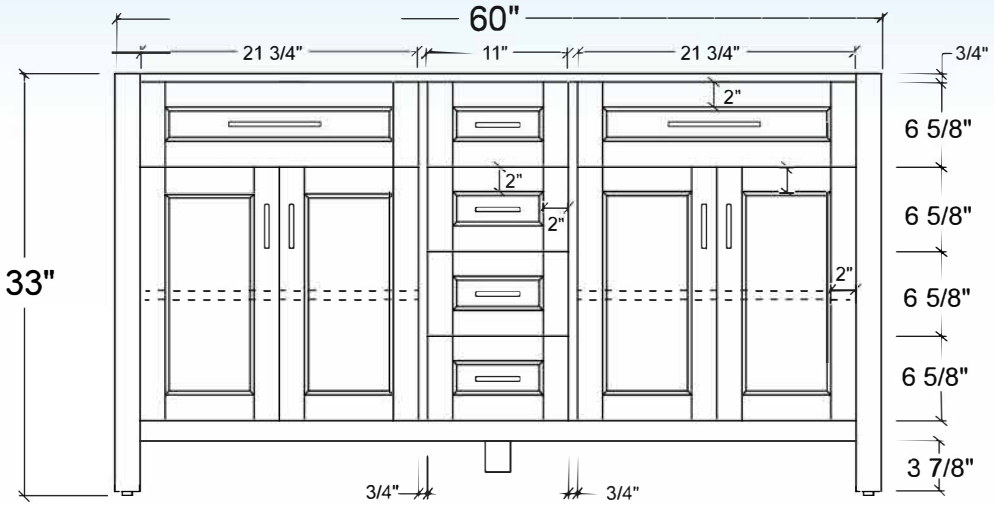
60"
21 3/4"
11"
21 3/4"
3/4"
2"
6 5/8"
6 5/8"
6 5/8"
6 5/8"
3 7/8"
33"
3/4"
3/4"

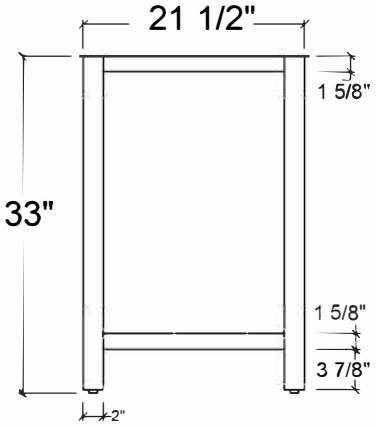
21 1/2"
1 5/8"
33"
1 5/8"
3 7/8"
2"

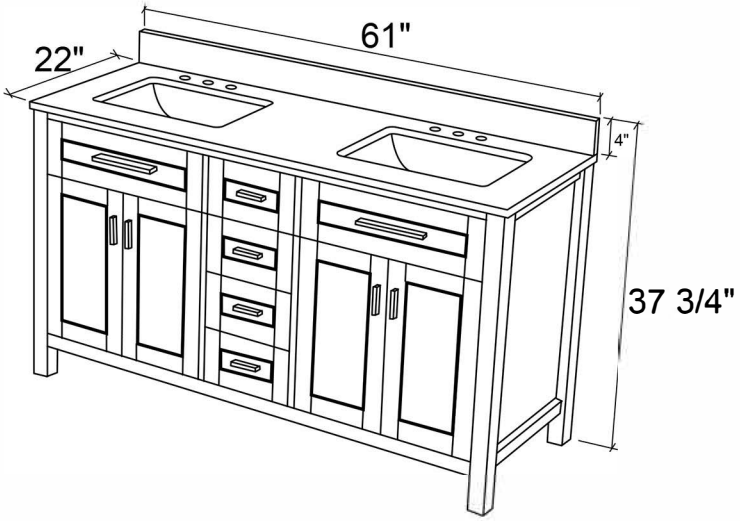
61"
22"
4"
37 3/4"

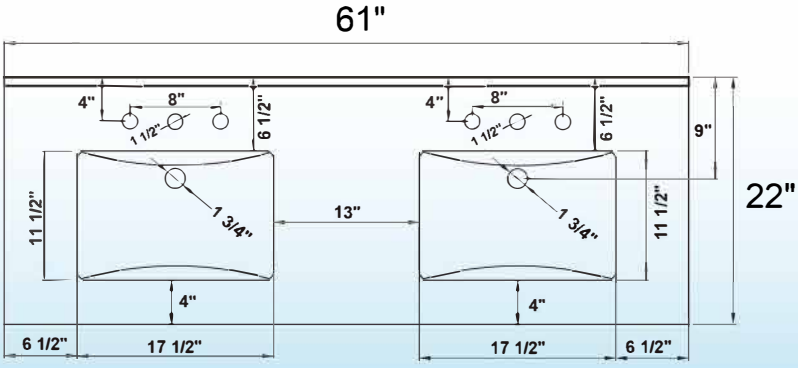
61"
4"
8"
1 1/2"
6 1/2"
9"
22"
11 1/2"
1 3/4"
13"
4"
6 1/2"
17 1/2"

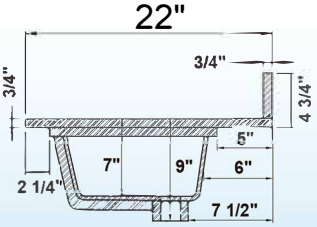
22"
3/4"
4 3/4"
5"
7"
9"
6"
2 1/4"
7 1/2"