Installation Instructions

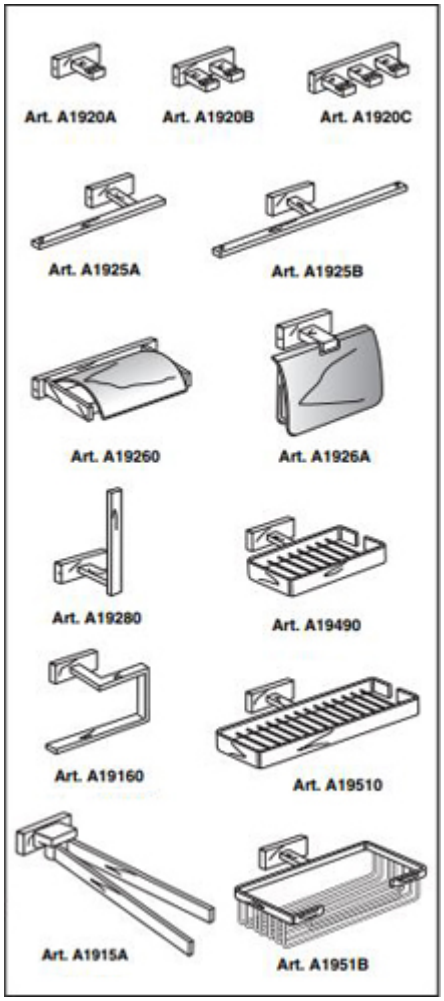

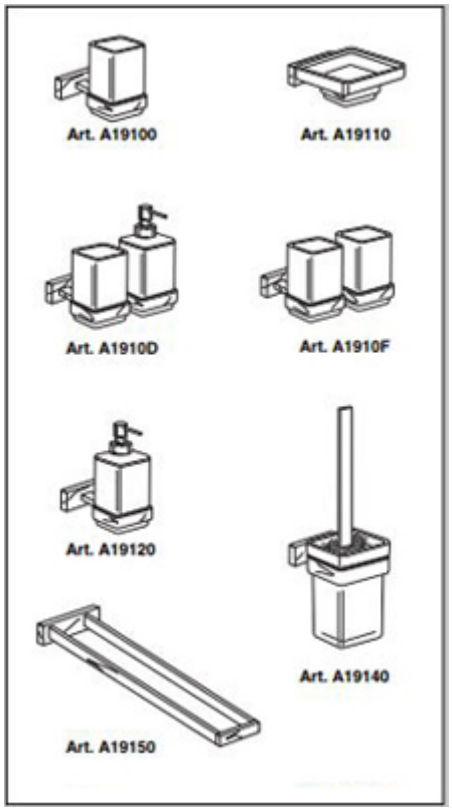

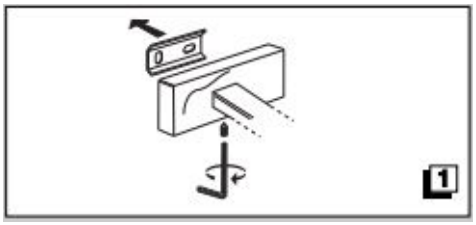

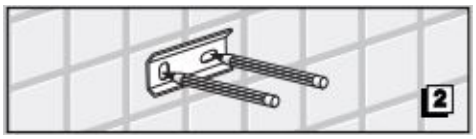

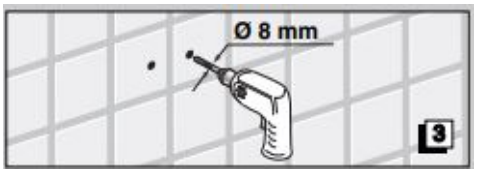

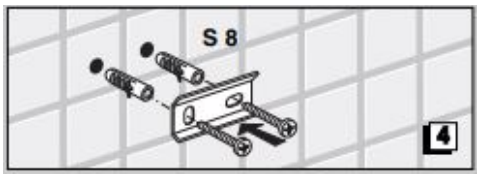

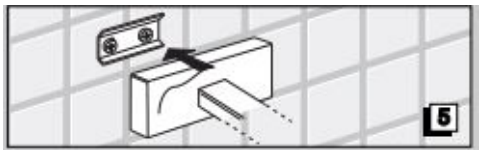

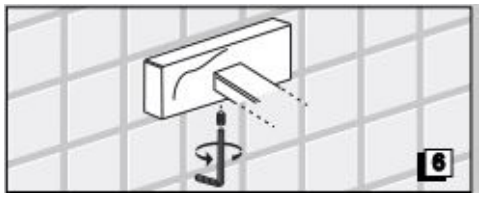

CLEANING

Quality, technological processes and materials are the features that determine the high standards of our accessories.
However, to avoid surface alterations, it is necessary to follow a few guidelines.
Clean all finishes exclusively with soap and water, and dry with a soft cloth.
Do not use coarse cloths, abrasive products, acids, ammonia products, caustic substances, bleach or solvents.
In case of contact with these substances, rinse surfaces immediately and wipe dry.
Remember that even fumes can damage metal.
Wash accessories next to the toilet bowl at regular intervals to avoid corrosion.

Collection	**Model** |	Dimensions Metric	
Lea	Listed Above	*1 inch = 2.54 cm* *1 inch = 25.4 mm*	WS® BATH COLLECTIONS 1051 Lea Drive - Collegeville, PA 19426 Tel. 215 513 9400 - Fax 610 831 0215 www.wsbathcollections.com - info@wsbathcollections.com